HEIDENHAIN

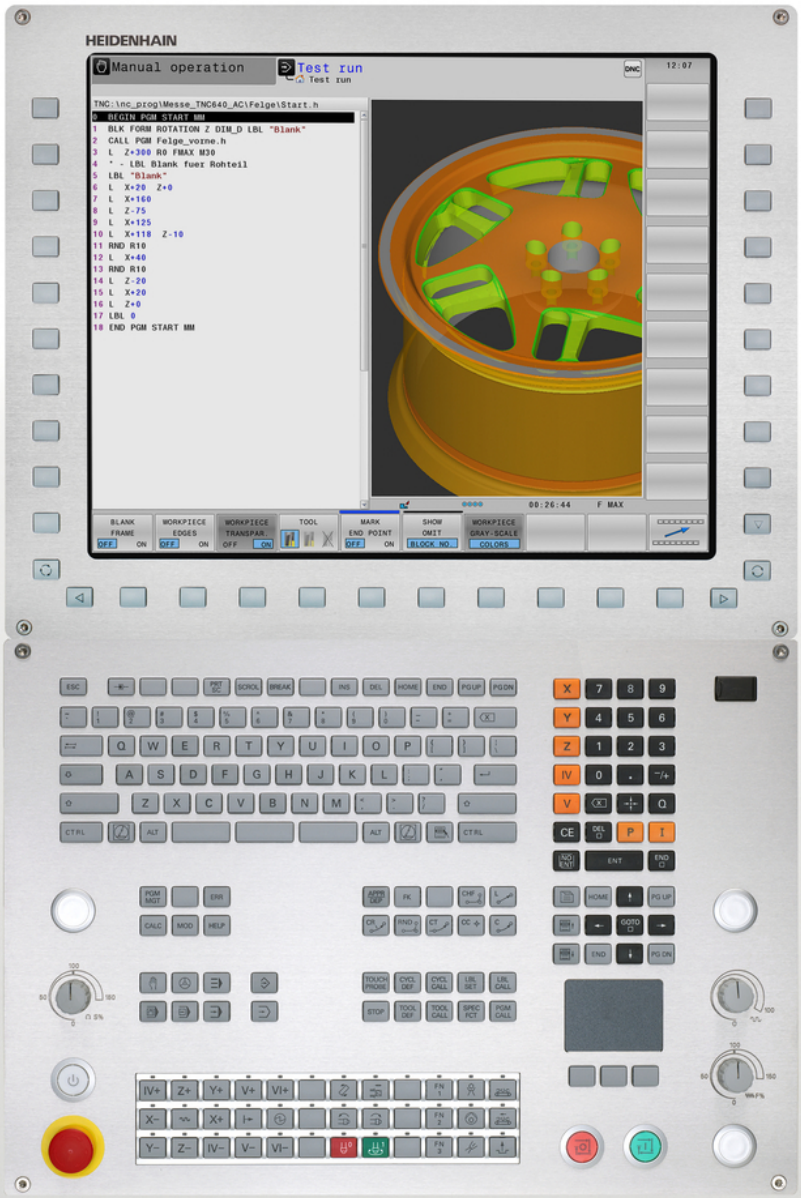

TNC 640

User's Manual
ISO programming

NC Software
340590-06
340591-06
340595-06

English (en)
10/2015

Controls of the TNC

Keys on visual display unit

Key	Function
	Select split screen layout
	Toggle the display between machining and programming modes
	Soft keys for selecting functions on screen
◁ ▷ △	Shifting between soft-key rows

Alphanumeric keyboard

Key	Function
Q W E	File names, comments
G F S	DIN/ISO programming

Machine operating modes

Key	Function
	Manual operation
	Electronic handwheel
	Positioning with manual data input
	Program run, single block
	Program run, full sequence

Programming modes

Key	Function
	Programming
	Test run

Manage programs and files, TNC functions

Key	Function
PGM MGT	Select or delete programs and files, external data transfer
PGM CALL	Define program call, select datum and point tables
MOD	Select MOD functions
HELP	Display help text for NC error messages, call TNCguide
ERR	Display all current error messages
CALC	Show calculator

Navigation keys

Key	Function
↑ ←	Position the cursor
GOTO □	Go directly to blocks, cycles and parameter functions

Potentiometer for feed rate and spindle speed

Feed rate	Spindle speed

Cycles, subprograms and program section repeats

Key	Function
TOUCH PROBE	Define touch probe cycles
CYCL DEF / CYCL CALL	Define and call cycles
LBL SET / LBL CALL	Enter and call labels for subprogramming and program section repeats
STOP	Enter program stop in a program

Tool functions

Key	Function
TOOL DEF	Define tool data in the program
TOOL CALL	Call tool data

Programming path movements

Key	Function
APPR DEP	Approach/depart contour
FK	FK free contour programming
L	Straight line
CC	Circle center/pole for polar coordinates
C	Circular arc with center
CR	Circle with radius
CT	Circular arc with tangential connection
CHF / RND	Chamfer/Corner rounding

Special functions

Key	Function
SPEC FCT	Show special functions
	Select the next tab in forms
	Up/down one dialog box or button

Entering and editing coordinate axes and numbers

Key	Function
X . . . V	Select coordinate axes or enter them in a program
0 . . . 9	Numbers
. / −/+	Decimal point / Reverse algebraic sign
P / I	Polar coordinate input / Incremental values
Q	Q-parameter programming/ Q-parameter status
	Save actual position or values from calculator
NO ENT	Skip dialog questions, delete words
ENT	Confirm entry and resume dialog
END	Conclude block and exit entry
CE	Clear numerical entry or TNC error message
DEL	Abort dialog, delete program section

Fundamentals

About this manual

The symbols used in this manual are described below.

⇨	This symbol indicates that important information about the function described must be considered.
!	This symbol indicates that there is one or more of the following risks when using the described function: ■ Danger to workpiece ■ Danger to fixtures ■ Danger to tool ■ Danger to machine ■ Danger to operator
⚠	This symbol indicates a possibly dangerous situation that may cause injuries if not avoided.
	This symbol indicates that the described function must be adapted by the machine tool builder. The function described may therefore vary depending on the machine.
	This symbol indicates that you can find detailed information about a function in another manual.

Would you like any changes, or have you found any errors?

We are continuously striving to improve our documentation for you. Please help us by sending your requests to the following e-mail address:

tnc-userdoc@heidenhain.de

TNC model, software and features

This manual describes functions and features provided by TNCs as of the following NC software numbers.

TNC model	NC software number
TNC 640	340590-06
TNC 640 E	340591-06
TNC 640 Programming Station	340595-06

The suffix E indicates the export version of the TNC. The export version of the TNC has the following limitations:

- Simultaneous linear movement in up to four axes

The machine manufacturer adapts the usable features of the TNC to his machine by the setting machine parameters. Some of the functions described in this manual may therefore not be among the features provided by the TNC on your machine.

TNC functions that may not be available on your machine include:

- Tool measurement with the TT

In order to find out about the actual features of your machine, please contact the machine manufacturer.

Many machine manufacturers, including HEIDENHAIN, offer programming courses for the TNCs. Participation in one of these courses is recommended to familiarize yourself thoroughly with the TNC functions.

Cycle Programming User's Manual:

All of the cycle functions (touch probe cycles and machining cycles) are described in the Cycle Programming User’s Manual. If you need this user's manual, please contact HEIDENHAIN if required. ID: 892905-xx

Software options

The TNC 640 features various software options that can be enabled by your machine tool builder. Each option is to be enabled separately and contains the following respective functions:

Additional Axis (options 0 to 7)	
Additional axis	Additional control loops 1 to 8
Advanced Function Set 1 (option 8)	
Expanded functions Group 1	**Machining with rotary tables** ■ Cylindrical contours as if in two axes ■ Feed rate in distance per minute **Coordinate transformations:** Tilting the working plane **Interpolation:** Circle in 3 axes with tilted working plane (spatial arc)
Advanced Function Set 2 (option 9)	
Expanded functions Group 2	**3-D machining:** ■ Motion control with minimum jerk ■ 3-D tool compensation through surface normal vectors ■ Using the electronic handwheel to change the angle of the swivel head during program run without affecting the position of the tool point. (TCPM = Tool Center Point Management) ■ Keeping the tool normal to the contour ■ Tool radius compensation perpendicular to traversing direction and tool direction **Interpolation:** Linear in 5 axes (subject to export permit)
HEIDENHAIN DNC (option 18)	
	Communication with external PC applications over COM component
Display Step (option 23)	
Display step	**Input resolution:** ■ Linear axes down to 0.01 µm ■ Rotary axes to 0.00001°
Dynamic Collision Monitoring – DCM (option 40)	
Dynamic Collision Monitoring	■ The machine manufacturer defines objects to be monitored ■ Warning in Manual operation ■ Program interrupt in Automatic operation ■ Includes monitoring of 5-axis movements

DXF Converter (option 42)	
DXF converter	■ Supported DXF format: AC1009 (AutoCAD R12) ■ Adoption of contours and point patterns ■ Simple and convenient specification of reference points ■ Select graphical features of contour sections from conversational programs
Adaptive Feed Control – AFC (option 45)	
Adaptive Feed Control	■ Recording the actual spindle power by means of a teach-in cut ■ Defining the limits of automatic feed rate control ■ Fully automatic feed control during program run
KinematicsOpt (option 48)	
Optimizing the machine kinematics	■ Backup/restore active kinematics ■ Test active kinematics ■ Optimize active kinematics
Mill-Turning (option 50)	
Milling and turning modes	**Functions:** ■ Switching between Milling/Turning mode of operation ■ Constant surface speed ■ Tool-tip radius compensation ■ Turning cycles
Extended Tool Management (option 93)	
Extended tool management	Python-based
Advanced Spindle Interpolation (option number 96)	
Interpolating spindle	**Interpolation turning:** ■ Cycle 880: Gear hobbing ■ Cycle 291: Interpolation turning, coupling ■ Cycle 292: Interpolation turning, contour finishing
Spindle Synchronism (option 131)	
Spindle synchronization	Synchronization of milling spindle and turning spindle
Remote Desktop Manager (option 133)	
Remote operation of external computer units	■ Windows on a separate computer unit ■ Incorporated in the TNC interface
Synchronizing Functions (option 135)	
Synchronization functions	**Real Time Coupling – RTC:** Coupling of axes

Visual Setup Control – VSC (option number 136)	
Camera-based monitoring of the setup situation	■ Record the setup situation with a HEIDENHAIN camera system ■ Visual comparison of planned and actual status in the workspace

Cross Talk Compensation – CTC (option number 141)	
Compensation of axis couplings	■ Determination of dynamically caused position deviation through axis acceleration ■ Compensation of the TCP (**T**ool **C**enter **P**oint)

Position Adaptive Control – PAC (option 142)	
Adaptive position control	■ Changing of the control parameters depending on the position of the axes in the working space ■ Changing of the control parameters depending on the speed or acceleration of an axis

Load Adaptive Control – LAC (option 143)	
Adaptive load control	■ Automatic determination of workpiece weight and frictional forces ■ Changing of control parameters depending on the actual mass of the workpiece

Active Chatter Control – ACC (option number 145)	
Active chatter control	Fully automatic function for chatter control during machining

Active Vibration Damping – AVD (option number 146)	
Active vibration damping	Damping of machine oscillations to improve the workpiece surface

Feature Content Level (upgrade functions)

Along with software options, significant further improvements of the TNC software are managed via the **F**eature **C**ontent **L**evel upgrade functions. If you receive a software update to your TNC, then the functions underlying the FCL are not automatically available.

> All upgrade functions are available to you without surcharge when you receive a new machine.

Upgrade functions are identified in the manual as **FCL n**. The **n** signifies the serial number of the development status.

You can purchase a code number in order to permanently enable the FCL functions. For more information, contact your machine tool builder or HEIDENHAIN.

Intended place of operation

The TNC complies with the limits for a Class A device in accordance with the specifications in EN 55022, and is intended for use primarily in industrially-zoned areas.

Legal information

This product uses open source software. Further information is available on the control under

- Programming and Editing operating mode
- MOD function
- **LICENSE INFO** soft key

New functions

New functions 34059x-02

- DXF files can be opened directly on the TNC in order to extract contours and point patterns, see "Programming: Data Transfer from CAD Files", page 257
- The active tool-axis direction can now be activated in manual mode and during handwheel superimposition as a virtual tool axis, see "Superimposing handwheel positioning during program run: M118 ", page 369
- The machine manufacturer can now define any areas on the machine for collision monitoring, see "Dynamic Collision Monitoring (option 40)", page 381
- Writing and reading data in freely definable tables, see "Freely definable tables", page 412
- The Adaptive Feed Control (AFC) function has been integrated, see "Adaptive Feed Control AFC (option 45)", page 392
- New touch probe Cycle 484 for calibrating the wireless touch probe TT 449, see Cycle Programming User's Manual
- The new HR 520 and HR 550 FS handwheels are supported, see "Traverse with electronic handwheels", page 494
- New operating Cycle 225 Engraving, see Cycle Programming User's Manual
- New Active Chatter Control (ACC) software option, see "Active Chatter Control ACC (option 145)", page 405
- New manual probing cycle "Center line as datum", see "Setting a center line as datum ", page 543
- New function for rounding corners, see "Rounding corners: M197", page 376
- External access to the TNC can now be blocked with a MOD function, see "External access", page 601

Changed functions 34059x-02

- The maximum number of characters for the NAME and DOC fields in the tool table has been increased from 16 to 32, see "Enter tool data into the table", page 176
- The columns AFC and ACC were added to the tool table, see "Enter tool data into the table", page 176
- Operation and positioning behavior of the manual probing cycles has been improved, see "Using 3-D touch probes ", page 520
- Predefined values can now be entered into a cycle parameter with the PREDEF function in cycles, see Cycle Programming User's Manual
- The status display has been expanded with the AFC tab, see "Additional status displays", page 82
- The FUNCTION TURNDATA SPIN rotation function has been expanded with an input option for maximum speed, see "Program spindle speed", page 466
- A new optimization algorithm is used for KinematicsOpt cycles, see Cycle Programming User's Manual
- With Cycle 257, CIRCULAR STUD, a parameter is now available with which you can determine the approach position on the stud, see User's Manual for Cycle Programming
- With Cycle 256 RECTANGULAR STUD, a parameter is now available with which you can determine the approach position on the stud, see Cycle Programming User's Manual
- With the manual "Basic Rotation" touch probe cycle, workpiece misalignment can now be compensated for with a table rotation, see "Compensation of workpiece misalignment by rotating the table", page 535

New functions 34059x-04

- New special operating mode RETRACT, see "Retraction after a power interruption", page 587
- New graphic simulation, see "Graphics ", page 568
- New MOD function “tool usage file” within the machine settings group, see "Tool usage file", page 604
- New MOD function "set system time" within the systems settings group, see "Set the system time", page 605
- New MOD group “graphic settings”, see "Graphic settings", page 600
- With the new syntax for the adaptive feed control (AFC) you can start or end a teach-in cut, see "Recording a teach-in cut", page 396
- With the new cutting data calculator you can calculate the spindle speed and the feed rate, see "Cutting data calculator", page 153
- In the TURNDATA function, you can now define the effect of the tool compensation, see "Tool compensation in the program", page 472
- Now you can activate and deactivate the active chatter control (ACC) with a soft key, see "Activating/deactivating ACC", page 406
- New if/then decisions have been introduced in the jump commands, see "Programming if-then decisions", page 307
- The character set of machining Cycle 225 Engraving has been expanded to include more characters and the diameter sign, see Cycle Programming User's Manual
- New machining Cycle 275 Trochoidal Milling, see Cycle Programming User's Manual
- New machining Cycle 233 Face Milling, see Cycle Programming User's Manual
- In drilling Cycles 200, 203 and 205, the parameter Q395 DEPTH REFERENCE has been introduced in order to evaluate the T ANGLE, see Cycle Programming User's Manual
- Probing Cycle 4 MEASURING IN 3-D has been introduced, see Cycle Programming User's Manual

Changed functions 34059x-04

- The column NAME has been added to the turning tool table, see "Tool data", page 473
- Up to 4 M functions are now allowed in an NC block, see "Fundamentals", page 356
- New soft keys for transferring values have been introduced in the pocket calculator, see "Operation", page 150
- The distance-to-go display can now also be displayed in the input system, see "Select the position display", page 606
- Several input parameters have been added to Cycle 241 SINGLE-LIP DEEP HOLE DRILLING, see Cycle Programming User's Manual
- Parameter Q305 NUMBER IN TABLE has been added to Cycle 404, see Cycle Programming User's Manual
- In the thread milling Cycles 26x, an approaching feed rate has been introduced, see Cycle Programming User's Manual
- In Cycle 205 Universal Deep Hole Drilling you can now use parameter Q208 to define a feed rate for retraction, see Cycle Programming User's Manual

New functions 34059x-05

- The column PITCH has been added to the tool management, see "Enter tool data into the table", page 176
- The columns YL and DYL have been added to the turning tool table, see "Tool data", page 473
- In the tool management, several lines can now be added at the end of the table, see "Editing tool management", page 200
- Any turning tool table can be selected for the program test, see "Test run", page 579
- Programs with .HU and .HC extensions can be selected and processed in all operating modes
- The functions **SELECT PROGRAM** and **CALL SELECTED PROGRAM** have been added, see "Calling any program as a subprogram", page 285
- New **FEED DWELL** function for programming repeating dwell times, see "Dwell time FUNCTION FEED DWELL", page 418
- The control automatically writes upper case letters at the start of a block, see "Programming path functions", page 224
- The D18 functions have been expanded, see "D18: Reading system data", page 319
- The DCM function can be activated and deactivated from the NC program, see "Activating and deactivating collision monitoring", page 386
- USB data carriers can be locked with the SELinux security software, see "SELinux security software", page 96
- The machine parameter **posAfterContPocket** (No. 201007) has been introduced, which influences positioning after an SL cycle, see "Machine-specific user parameters", page 630
- Protective zones can be defined in the MOD menu, see "Entering traverse limits", page 603
- Write protection is possible for single lines in the preset table, see "Saving the datums in the preset table", page 511
- New manual probing function for aligning a plane, see "Measuring 3-D basic rotation", page 536
- New function for aligning the machining plane without rotary axes, see "Tilt the working plane without rotary axes", page 444
- CAD files can be opened without option number 42, see "CAD viewer", page 259
- New software option number 96 Advanced Spindle Interpolation, see "Software options", page 8
- New software option number 131 Spindle Synchronism, see "Software options", page 8

Modified functions 34059x-05

- With tool selection, the control also displays columns XL and ZL from the turning tool table in the pop-up window, see "Tool call", page 471
- The input range of the DOC column in the pocket table has been expanded to 32 characters, see "Pocket table for tool changer", page 184
- Commands D15, D31 and D32 from predecessor controls no longer generate ERROR blocks during import. When simulating or running an NC program with these commands, the control interrupts the NC program with an error message that helps you to find an alternative implementation
- Miscellaneous functions M104, M105, M112, M114, M124, M134, M142, M150, M200 - M204 from predecessor controls no longer generate ERROR blocks during import. When simulating or running an NC program with these miscellaneous functions, the control interrupts the NC program with an error message that helps you to find an alternative implementation, see "Comparison: Miscellaneous functions", page 670
- The maximum file size of files output with D16 F-Print has been increased from 4 KB to 20 KB
- The Preset.PR preset table is write-protected in Programming operating mode, see "Saving the datums in the preset table", page 511
- The input range of the Q parameter list for defining the QPARA tab on the status display consists of 132 input positions, see "Displaying Q parameters (QPARA tab)", page 87
- Manual calibration of the touch probe with fewer pre-positioning movements, see "Calibrating a 3-D touch trigger probe ", page 527
- The position display takes into account the DL oversizes programmed in the T block, selectable as an oversize of the workpiece or tool, see "Delta values for lengths and radii", page 175
- In single blocks, the control executes each point individually with point pattern cycles and G79 PAT, see "Program run", page 581
- Rebooting the control is no longer possible with the **END** key, but with the **RESTART** soft key, see "Switch-off", page 492
- The control displays the contouring feed rate in manual mode, see "Spindle speed S, feed rate F and miscellaneous function M", page 504
- Deactivate tilting in manual mode is only possible via the 3D-ROT menu, see "Activating manual tilting:", page 550
- The machine parameter **maxLineGeoSearch**(No. 105408) has been raised to max 100000, see "Machine-specific user parameters", page 630
- The names of software options number 8, 9 and 21 have changed, see "Software options", page 8

New and modified cycle functions 34059x-05

- New Cycle **G880 GEAR HOBBING** (Option number 96, option number 131)
- New Cycle **G292 CONTOUR.TURNG.INTRP.** (option 96)
- New Cycle **G291 COUPLG.TURNG.INTERP.** (option 96)
- New Cycle **G239 ASCERTAIN THE LOAD** for LAC (Load Adapt. Control) load-dependent adaptation of control parameters (option 143)
- Cycle **G270 CONTOUR TRAIN DATA** has been added
- Cycle **G139 CYL. SURFACE CONTOUR** has been added (option 1)
- The character set of Machining Cycle **G225 ENGRAVING** has been expanded with the CE character, ß, the @ character and system time
- Cycles **G252**-**G254** have been expanded with the optional parameter Q439
- Cycle **G122 ROUGH-OUT** has been expanded with the optional parameters Q401, Q404
- Cycle **G484 CALIBRATE IR TT** has been expanded with the optional parameter Q536
- Cycles **G841 SIMPLE REC. TURNG., RADIAL DIR.**, **G842 ENH.REC.TURNNG, RAD.**, **G851 SIMPLE REC TURNG, AX**, **G852 ENH.REC.TURNING, AX.** have been expanded with plunge feed rate Q488
- Eccentric turning with Cycle **G800 ADJUST XZ SYSTEM** is possible with option 50

New functions 34059x-06

- Manual probe functions create a completely new line in the preset table, see "Writing measured values from the touch probe cycles to the preset table", page 526
- Manual probe functions can write in a password-protected line, see "Writing measured values from the touch probe cycles to the preset table", page 526
- The column **AFC-LOAD** was added to the tool table. In this column you can set a tool-dependent standard reference power for the adaptive feed control AFC, which you establish once with a teach-in cut, see "Enter tool data into the table", page 176
- The column **KINEMATIC** has been added to the tool table, see "Enter tool data into the table", page 176
- When importing tool data, the CSV file may contain additional table columns not recognized by the control system. On import, a message appears about the unrecognized columns with a note stating these will not be imported, see "Import and export tool data", page 205
- New function **FUNCTION S-PULSE** for programming pulsing shaft speeds, see "Pulsing spindle speed FUNCTION S-PULSE", page 417
- It is possible to search quickly for a file in file management by entering the first letter, see "Selecting drives, directories and files", page 122
- With active structuring, the structuring block can be edited in the structure window, see "Definition and applications", page 149
- The D18 functions have been expanded, see "D18: Reading system data", page 319
- The control differentiates between interrupted or stopped NC programs. In the interrupted status, the control offers more intervention options, see "Interrupt machining", page 583
- The machine manufacturer can also configure the turning spindle (option number 50) as an optional axis on the handwheel, see "Selecting the axis to be moved", page 499
- In the Tilt working plane function, you can choose an animated aid, see "Overview", page 424
- The software option number 42 DXF Converter now also produces CR circles, see "Basic settings", page 262
- New software option number 136 Visual Setup Control (Camera-based monitoring of setup situation), see "Software options", page 8,see "Camera-based monitoring of the setup situation VSC (option number136)", page 553.

Modified functions 34059x-06

- When editing the tool table or tool management, only the current table line is blocked, see "Editing the tool table", page 180
- When importing tool tables, missing tool types are imported as an Unidentified Type, see "Importing tool tables", page 183
- You cannot delete the tool data of tools still stored in the pocket table, see "Editing the tool table", page 180
- In all manual probing functions, you can quickly select the starting angle of holes and studs using soft keys (paraxial probe direction), see "Functions in touch probe cycles", page 522
- When probing, after acceptance of the actual value of the 1st point, the soft key for the 2nd point for the axis direction is shown
- In all manual probing functions, the direction of the reference axis is suggested as a default
- In manual probing cycles the hard keys **END** and **ADOPT ACTUAL POSITION** may be used
- The display of the machining feed rate has been changed in manual mode, see "Spindle speed S, feed rate F and miscellaneous function M", page 504
- In the file management, the programs or directories at the cursor position are also displayed in a separate field beneath the current path display
- Editing a block does not mean that block marking is canceled. If a block is edited in active block marking, and then another block is selected via syntax search, the marking is expanded to include the newly chosen block, see "Marking, copying, cutting and inserting program sections", page 114
- In the screen layout **PROGRAM + SECTS** it is possible to edit the structure in the structure window, "Definition and applications"
- The functions **APPR CT** and **DEP CT** allow approach to and departure from a helix. This movement is carried out as a helix with an even pitch, see "Overview: Types of paths for contour approach and departure", page 216
- The functions **APPR LT**, **APPR LCT**, **DEP LT** and **DEP LCT** position all three axes at on the auxiliary point at the same time, see "Approaching on a straight line with tangential connection: APPR LT", page 219, see "Approaching on a circular path with tangential connection from a straight line to the contour: APPR LCT", page 221
- The values entered for the traverse limits are checked for validity, see "Entering traverse limits", page 603
- When calculating the axis angle in the axes chosen with M138, the control sets the value to 0, see "Selecting tilting axes: M138", page 452
- The input range in columns SPA, SPB and SPC in the preset table has been expanded to 999,9999, see "Datum management with the preset table", page 510
- Tilting is permitted in combination with mirroring, see "The PLANE function: Tilting the working plane (software option 8)", page 423

- Even when the 3D-ROT dialog is active in manual mode, **PLANE RESET** functions with an active basic transformation, see "Activating manual tilting:", page 550
- The feed rate potentiometer only lowers the programmed feed rate, no longer the feed rate calculated by the control, see "Feed rate F", page 172
- The DXF converter displays **FUNCTION MODE TURN** or **FUNCTION MODE MILL** as a comment

New and modified cycle functions 34059x-06

- New Cycle 258 POLYGON STUD
- New probing cycles 600 and 601 for monitoring with a camera (option number 136)
- Cycle 291 INTERPOLATION TURNING, COUPLING (option number 96) has been expanded to include parameter Q561
- Cycles 421, 422 and 427 have been expanded to include parameters Q498 and Q531
- In Cycle 247: SET DATUM, the datum number can be selected from the preset table if the corresponding parameter is set
- In Cycles 200 and 203 the behavior of the dwell time has been adjusted upwards
- Cycle 205 performs deburring on the coordinate surface
- In SL cycles, M110 is now recognized with internally corrected arcs, if it is active during operation

Contents

1 First Steps with the TNC 640 53
2 Introduction 73
3 Programming: Fundamentals, File Management 99
4 Programming: Programming Aids 145
5 Programming: Tools 171
6 Programming: Programming Contours 207
7 Programming: Data Transfer from CAD Files 257
8 Programming: Subprograms and Program Section Repeats 277
9 Programming: Q Parameters 297
10 Programming: Miscellaneous Functions 355
11 Programming: Special Functions 377
12 Programming: Multi-Axis Machining 421
13 Programming: Pallet Editor 455
14 Programming: Turning Operations 461
15 Manual Operation and Setup 489
16 Positioning with Manual Data Input 561
17 Test Run and Program Run 567
18 MOD Functions 597
19 Tables and Overviews 629

1 First Steps with the TNC 640 ... 53

1.1 Overview ... 54

1.2 Machine switch-on ... 54

Acknowledging the power interruption and moving to the reference points ... 54

1.3 Programming the first part ... 55

Selecting the correct operating mode ... 55
The most important TNC keys ... 55
Opening a new program/file management ... 56
Defining a workpiece blank ... 57
Program layout ... 58
Programming a simple contour ... 59
Creating a cycle program ... 62

1.4 Graphically testing the first part ... 64

Selecting the correct operating mode ... 64
Selecting the tool table for the test run ... 64
Choosing the program you want to test ... 65
Selecting the screen layout and the view ... 65
Starting the test run ... 66

1.5 Setting up tools ... 67

Selecting the correct operating mode ... 67
Preparing and measuring tools ... 67
The tool table TOOL.T ... 68
The pocket table TOOL_P.TCH ... 69

1.6 Workpiece setup ... 70

Selecting the correct operating mode ... 70
Clamping the workpiece ... 70
Datum setting with a 3-D touch probe ... 71

1.7 Running the first program ... 72

Selecting the correct operating mode ... 72
Choosing the program you want to run ... 72
Start the program ... 72

2 Introduction ... 73

2.1 The TNC 640 ... 74

Programming: In HEIDENHAIN conversational and DIN/ISO ... 74
Compatibility ... 74

2.2 Visual display unit and operating panel ... 75

Display screen ... 75
Set screen layout ... 75
Control panel ... 76

2.3 Modes of operation ... 77

Manual Operation and El. Handwheel ... 77
Positioning with Manual Data Input ... 77
Programming ... 78
Test Run ... 78
Program Run, Full Sequence and Program Run, Single Block ... 79

2.4 Status displays ... 80

General status display ... 80
Additional status displays ... 82

2.5 Window manager ... 89

Task bar ... 90

2.6 Remote Desktop Manager (option 133) ... 91

Introduction ... 91
Configuring connections – Windows Terminal Service ... 92
Configuring the connection – VNC ... 94
Starting and stopping the connection ... 95

2.7 SELinux security software ... 96

2.8 Accessories: HEIDENHAIN 3-D touch probes and electronic handwheels ... 97

3-D touch probes ... 97
HR electronic handwheels ... 98

3 Programming: Fundamentals, File Management 99

3.1 Fundamentals 100

Position encoders and reference marks 100
Reference system 100
Reference system on milling machines 101
Designation of the axes on milling machines 101
Polar coordinates 102
Absolute and incremental workpiece positions 103
Selecting the datum 104

3.2 Opening programs and entering 105

Organization of an NC program in DIN/ISO format 105
Define the blank: G30/G31 106
Opening a new part program 109
Programming tool movements in ISO 110
Actual position capture 111
Editing a program 112
The TNC search function 115

3.3 File management: Basics 116

Files 116
Displaying externally generated files on the TNC 118
Data backup 118

3.4 Working with the file manager 119

Directories 119
Paths 119
Overview: Functions of the file manager 120
Calling the file manager 121
Selecting drives, directories and files 122
Creating a new directory 124
Creating a new file 124
Copying a single file 124
Copying files into another directory 125
Copying a table 126
Copying a directory 127
Choosing one of the last files selected 127
Deleting a file 128
Deleting a directory 128
Tagging files 129
Renaming a file 129
Sorting files 130
Additional functions 130
Additional tools for management of external file types 131
Additional tools for ITCs 138
Data transfer to or from an external data carrier 140
The TNC in a network 141
USB devices on the TNC 142

4 Programming: Programming Aids 145

4.1 Adding comments 146

Application 146
Entering comments during programming 146
Inserting comments after program entry 146
Entering a comment in a separate block 146
Functions for editing of the comment 147

4.2 Display of NC programs 148

Syntax highlighting 148
Scrollbar 148

4.3 Structuring programs 149

Definition and applications 149
Displaying the program structure window / Changing the active window 149
Inserting a structure block in the program window 149
Selecting blocks in the program structure window 149

4.4 Calculator 150

Operation 150

4.5 Cutting data calculator 153

Application 153

4.6 Programming graphics 156

Generate/do not generate graphics during programming 156
Generating a graphic for an existing program 157
Block number display ON/OFF 158
Erasing the graphic 158
Showing grid lines 158
Magnification or reduction of details 159

4.7 Error messages ... 160

Display of errors ... 160
Open the error window ... 160
Closing the error window ... 160
Detailed error messages ... 161
Soft key: INTERNAL INFO ... 161
Clearing errors ... 162
Error log ... 162
Keystroke log ... 163
Informational texts ... 164
Save service files ... 164
Calling the TNCguide help system ... 164

4.8 TNCguide context-sensitive help system ... 165

Application ... 165
Working with TNCguide ... 166
Downloading current help files ... 169

5 Programming: Tools ... 171

5.1 Entering tool-related data ... 172

Feed rate F ... 172
Spindle speed S ... 173

5.2 Tool data ... 174

Requirements for tool compensation ... 174
Tool number, tool name ... 174
Tool length L ... 174
Tool radius R ... 174
Delta values for lengths and radii ... 175
Entering tool data into the program ... 175
Enter tool data into the table ... 176
Importing tool tables ... 183
Pocket table for tool changer ... 184
Call tool data ... 187
Tool change ... 189
Tool usage test ... 191

5.3 Tool compensation ... 194

Introduction ... 194
Tool length compensation ... 194
Tool radius compensation ... 195

5.4 Tool management (option number 93) ... 198

Basics ... 198
Calling tool management ... 199
Editing tool management ... 200
Available tool types ... 203
Import and export tool data ... 205

6 Programming: Programming Contours....207

6.1 Tool movements....208

Path functions....208
FK free contour programming....208
Miscellaneous functions M....208
Subprograms and program section repeats....209
Programming with Q parameters....209

6.2 Fundamentals of path functions....210

Programming tool movements for workpiece machining....210

6.3 Approaching and departing a contour....213

"From" and "To" points....213
Tangential approach and departure....215
Overview: Types of paths for contour approach and departure....216
Important positions for approach and departure....217
Approaching on a straight line with tangential connection: APPR LT....219
Approaching on a straight line perpendicular to the first contour point: APPR LN....219
Approaching on a circular path with tangential connection: APPR CT....220
Approaching on a circular path with tangential connection from a straight line to the contour: APPR LCT....221
Departing in a straight line with tangential connection: DEP LT....222
Departing in a straight line perpendicular to the last contour point: DEP LN....222
Departing on a circular path with tangential connection: DEP CT....223
Departing on a circular arc tangentially connecting the contour and a straight line: DEP LCT....223

6.4 Path contours — Cartesian coordinates....224

Overview of path functions....224
Programming path functions....224
Straight line in rapid traverse G00 or straight line with feed rate F G01....225
Inserting a chamfer between two straight lines....226
Rounded corners G25....227
Circle center I, J....228
Circular path C around circle center CC....229
CircleG02/G03/G05 with defined radius....230
Circle G06 with tangential connection....232
Example: Linear movements and chamfers with Cartesian coordinates....233
Example: Circular movements with Cartesian coordinates....234
Example: Full circle with Cartesian coordinates....235

6.5 Path contours – Polar coordinates ... 236

Overview ... 236
Zero point for polar coordinates: pole I, J ... 237
Straight line in rapid traverse G10 or straight line with feed rate F G11 ... 237
Circular path G12/G13/G15 around pole I, J ... 238
Circle G16 with tangential connection ... 238
Helix ... 239
Example: Linear movement with polar coordinates ... 241
Example: Helix ... 242

6.6 Path contours – FK free contour programming ... 243

Fundamentals ... 243
FK programming graphics ... 245
Initiating the FK dialog ... 246
Pole for FK programming ... 246
Free straight line programming ... 247
Free circular path programming ... 248
Input options ... 249
Auxiliary points ... 252
Relative data ... 253
Example: FK programming 1 ... 255

7 Programming: Data Transfer from CAD Files ... 257

7.1 CAD viewer and DXF converter screen layout ... 258

CAD viewer and DXF converter screen layout ... 258

7.2 CAD viewer ... 259

Application ... 259

7.3 DXF converter (option 42) ... 260

Application ... 260
Working with the DXF converter ... 261
Opening a DXF file ... 261
Basic settings ... 262
Setting layers ... 264
Setting a datum ... 265
Selecting and saving a contour ... 267
Selecting and saving machining positions ... 271

8 Programming: Subprograms and Program Section Repeats 277

8.1 Labeling subprograms and program section repeats 278

Label 278

8.2 Subprograms 279

Operating sequence 279
Programming notes 279
Program the subprogram 280
Calling a subprogram 280

8.3 Program-section repeats 281

Label G98 281
Operating sequence 281
Programming notes 281
Programming a program section repeat 282
Calling a program section repeat 282

8.4 Any desired program as subprogram 283

Overview of the soft keys 283
Operating sequence 284
Programming notes 284
Calling any program as a subprogram 285

8.5 Nesting 287

Types of nesting 287
Nesting depth 287
Subprogram within a subprogram 288
Repeating program section repeats 289
Repeating a subprogram 290

8.6 Programming examples 291

Example: Milling a contour in several infeeds 291
Example: Groups of holes 292
Example: Group of holes with several tools 294

9 Programming: Q Parameters....297

9.1 Principle and overview of functions.... 298

Programming notes....300
Calling Q parameter functions....301

9.2 Part families—Q parameters in place of numerical values.... 302

Application....302

9.3 Describing contours with mathematical functions.... 303

Application....303
Overview.... 303
Programming fundamental operations....304

9.4 Angle functions.... 305

Definitions.... 305
Programming trigonometric functions.... 305

9.5 Calculation of circles....306

Application....306

9.6 If-then decisions with Q parameters.... 307

Application....307
Unconditional jumps....307
Programming if-then decisions.... 307

9.7 Checking and changing Q parameters.... 308

Procedure.... 308

9.8 Additional functions....310

Overview.... 310
D14: Displaying error messages....311
D16 – Formatted output of text and Q parameter values....315
D18: Reading system data....319
D19 – Transfer values to the PLC....327
D20 – NC and PLC synchronization....327
D29 – Transfer values to the PLC....328
D37 – EXPORT....328

9.9 Entering formulas directly....329

Entering formulas....329
Rules for formulas....331
Example of entry....332

9.10 String parameters....333

String processing functions....333
Assigning string parameters....334
Chain-linking string parameters....334
Converting a numerical value to a string parameter....335
Copying a substring from a string parameter....336
Converting a string parameter to a numerical value....337
Checking a string parameter....338
Finding the length of a string parameter....339
Comparing alphabetic sequence....340
Reading out machine parameters....341

9.11 Preassigned Q parameters....344

Values from the PLC: Q100 to Q107....344
Active tool radius: Q108....344
Tool axis: Q109....344
Spindle status: Q110....345
Coolant on/off: Q111....345
Overlap factor: Q112....345
Unit of measurement for dimensions in the program: Q113....345
Tool length: Q114....345
Coordinates after probing during program run....346
Deviation between actual value and nominal value during automatic tool measurement with the TT 130....346
Tilting the working plane with mathematical angles: rotary axis coordinates calculated by the TNC....346
Measurement results from touch probe cycles Further information: Cycle Programming User's Manual....347
Checking the setup situation: Q601....348

9.12 Programming examples....349

Example: Ellipse....349
Example: Concave cylinder machined with spherical cutter....351
Example: Convex sphere machined with end mill....353

10 Programming: Miscellaneous Functions....355

10.1 Enter miscellaneous functions M and STOP....356

Fundamentals....356

10.2 Miscellaneous functions for program run inspection, spindle and coolant....358

Overview....358

10.3 Miscellaneous functions for coordinate entries....359

Programming machine-referenced coordinates: M91/M92....359

Moving to positions in a non-tilted coordinate system with a tilted working plane: M130....361

10.4 Miscellaneous functions for path behavior....362

Machining small contour steps: M97....362

Machining open contour corners: M98....363

Feed rate factor for plunging movements: M103....364

Feed rate in millimeters per spindle revolution: M136....365

Feed rate for circular arcs: M109/M110/M111....366

Calculating the radius-compensated path in advance (LOOK AHEAD): M120....367

Superimposing handwheel positioning during program run: M118....369

Retraction from the contour in the tool-axis direction: M140....371

Suppressing touch probe monitoring: M141....373

Deleting basic rotation: M143....374

Automatically retract tool from the contour at an NC stop: M148....375

Rounding corners: M197....376

11 Programming: Special Functions....377

11.1 Overview of special functions....378

Main menu for SPEC FCT special functions....378
Program defaults menu....379
Functions for contour and point machining menu....379
Menu of various DIN/ISO functions....380

11.2 Dynamic Collision Monitoring (option 40)....381

Function....381
Graphic display of the collision objects....382
Collision monitoring in the manual operating modes....384
Collision monitoring in the Program Run operating modes....385
Activating and deactivating collision monitoring....386

11.3 Tool carrier management....388

Fundamentals....388
Save tool carrier templates....388
Assign input parameters to tool carriers....389
Allocate parameterized tool carriers....391

11.4 Adaptive Feed Control AFC (option 45)....392

Application....392
Defining the AFC basic settings....394
Recording a teach-in cut....396
Activating/deactivating AFC....401
Log file....402
Tool breakage/tool wear monitoring....404
Spindle load monitoring....404

11.5 Active Chatter Control ACC (option 145)....405

Application....405
Activating/deactivating ACC....406

11.6 Defining DIN/ISO functions....407

Overview....407

11.7 Creating text files....408

Application....408
Opening and exiting a text file....408
Editing texts....409
Deleting and re-inserting characters, words and lines....409
Editing text blocks....410
Finding text sections....411

11.8 Freely definable tables....412

Fundamentals....412
Creating a freely definable table....412
Editing the table format....413
Switching between table and form view....414
D26 – Open a freely definable table....415
D27 – Write to a freely definable table....415
D28 – Read from a freely definable table....416
Customize table view....416

11.9 Pulsing spindle speed FUNCTION S-PULSE....417

Program pulsing spindle speed....417
Reset pulsing spindle speed....417

11.10 Dwell time FUNCTION FEED DWELL....418

Programming dwell time....418
Resetting dwell time....419

12 Programming: Multi-Axis Machining ... 421

12.1 Functions for multiple-axis machining ... 422

12.2 The PLANE function: Tilting the working plane (software option 8) ... 423

Introduction ... 423
Overview ... 424
Defining the PLANE function ... 425
Position display ... 425
Resetting PLANE function ... 426
Defining the working plane with the spatial angle: PLANE SPATIAL ... 427
Defining the working plane with the projection angle: PLANE PROJECTED ... 429
Defining the working plane with the Euler angle: PLANE EULER ... 430
Defining the working plane with two vectors: PLANE VECTOR ... 432
Defining the working plane via three points: PLANE POINTS ... 434
Defining the working plane via a single incremental spatial angle: PLANE SPATIAL ... 436
Tilting the working plane through axis angle: PLANE AXIAL ... 437
Specifying the positioning behavior of the PLANE function ... 439
Tilt the working plane without rotary axes ... 444

12.3 Inclined-tool machining in a tilted plane (option 9) ... 445

Function ... 445
Inclined-tool machining via incremental traverse of a rotary axis ... 445

12.4 Miscellaneous functions for rotary axes ... 446

Feed rate in mm/min on rotary axes A, B, C: M116 (option 8) ... 446
Shortest-path traverse of rotary axes: M126 ... 447
Reducing display of a rotary axis to a value less than 360°: M94 ... 448
Maintaining the position of the tool tip when positioning with tilted axes (TCPM): M128 (option 9) ... 449
Selecting tilting axes: M138 ... 452
Compensating the machine's kinematics configuration for ACTUAL/NOMINAL positions at end of block: M144 (option 9) ... 453

12.5 Peripheral milling: 3-D radius compensation with M128 and radius compensation (G41/G42) ... 454

Application ... 454

13 Programming: Pallet Editor 455

13.1 Pallet management 456

Application 456
Selecting pallet table 458
Exit pallet table 458
Processing pallet table 458

14 Programming: Turning Operations ... 461

14.1 Turning operations on milling machines (option 50) ... 462

Introduction ... 462

14.2 Basic functions (option 50) ... 463

Switching between milling/turning mode of operation ... 463
Graphic display of turning operations ... 465
Program spindle speed ... 466
Feed rate ... 467

14.3 Unbalance functions (option 50) ... 468

Unbalance while turning ... 468
Measure Unbalance cycle ... 470

14.4 Tools in turning mode (option 50) ... 471

Tool call ... 471
Tool compensation in the program ... 472
Tool data ... 473
Tool tip radius compensation TRC ... 478

14.5 Turning program functions (option 50) ... 479

Recessing and undercutting ... 479
Blank form update TURNDATA BLANK ... 485
Inclined turning ... 486

15 Manual Operation and Setup....489

15.1 Switch-on, switch-off....490

Switch-on....490
Switch-off....492

15.2 Moving the machine axes....493

Note....493
Moving the axis with the axis direction keys....493
Incremental jog positioning....493
Traverse with electronic handwheels....494

15.3 Spindle speed S, feed rate F and miscellaneous function M....504

Application....504
Entering values....504
Adjusting spindle speed and feed rate....505
Activating feed-rate limitation....505

15.4 Optional safety concept (functional safety FS)....506

Miscellaneous....506
Explanation of terms....507
Checking the axis positions....508
Activating feed-rate limitation....508
Additional status displays....509

15.5 Datum management with the preset table....510

Note....510
Saving the datums in the preset table....511
Activating the datum....517

15.6 Datum setting without a 3-D touch probe....518

Note....518
Preparation....518
Datum setting with an end mill....518
Using touch probe functions with mechanical probes or measuring dials....519

15.7 Using 3-D touch probes ... 520

Overview ... 520
Functions in touch probe cycles ... 522
Select probing cycle ... 524
Record measured values from the touch probe cycles ... 524
Writing measured values from the touch probe cycles to a datum table ... 525
Writing measured values from the touch probe cycles to the preset table ... 526

15.8 Calibrating a 3-D touch trigger probe ... 527

Introduction ... 527
Calibrating the effective length ... 528
Calibrating the effective radius and compensating center misalignment ... 529
Displaying calibration values ... 533

15.9 Compensating workpiece misalignment with 3-D touch probe ... 534

Introduction ... 534
Identifying basic rotation ... 535
Saving a basic rotation in the preset table ... 535
Compensation of workpiece misalignment by rotating the table ... 535
Displaying a basic rotation ... 536
Canceling a basic rotation ... 536
Measuring 3-D basic rotation ... 536

15.10 Datum setting with a 3-D touch probe ... 538

Overview ... 538
Datum setting on any axis ... 538
Corner as datum ... 539
Circle center as datum ... 540
Setting a center line as datum ... 543
Measuring workpieces with a 3-D touch probe ... 544

15.11 Tilting the working plane (option 8) ... 547

Application, function ... 547
Traversing datums in tilted axes ... 549
Position display in a tilted system ... 549
Limitations on working with the tilting function ... 549
Activating manual tilting: ... 550
Setting the tool-axis direction as the active machining direction ... 551
Setting a datum in a tilted coordinate system ... 552

15.12 Camera-based monitoring of the setup situation VSC (option number136) 553

Basics 553
Overview 554
Produce live image 555
Manage monitoring data 556
Configuration 558
Results of the image evaluation 559

16 Positioning with Manual Data Input.....561

16.1 Programming and executing simple machining operations.....562

Positioning with manual data input (MDI)..... 562

Protecting and erasing programs in $MDI.....565

17 Test Run and Program Run 567

17.1 Graphics 568

Application 568
Speed of the setting test runs 569
Overview: Display modes 570
3-D view 570
Plan view 573
Projection in three planes 573
Repeating graphic simulation 575
Tool display 575
Measurement of machining time 576

17.2 Showing the workpiece blank in the working space 577

Application 577

17.3 Functions for program display 578

Overview 578

17.4 Test run 579

Application 579

17.5 Program run 581

Application 581
Running a part program 582
Interrupt machining 583
Moving the machine axes during an interruption 585
Resuming program run after an interruption 586
Retraction after a power interruption 587
Any entry into program (mid-program startup) 590
Returning to the contour 592

17.6 Automatic program start 593

Application 593

17.7 Optional block skip 594

Application 594
Inserting the "/" character 594
Erasing the "/" character 594

17.8 Optional program-run interruption.....595

Application.....595

18 MOD Functions ... 597

18.1 MOD function ... 598

Selecting MOD functions ... 598
Changing the settings ... 598
Exiting MOD functions ... 598
Overview of MOD functions ... 599

18.2 Graphic settings ... 600

18.3 Machine settings ... 601

External access ... 601
Entering traverse limits ... 603
Tool usage file ... 604
Select kinematics ... 604

18.4 System settings ... 605

Set the system time ... 605

18.5 Select the position display ... 606

Application ... 606

18.6 Setting the unit of measure ... 607

Application ... 607

18.7 Displaying operating times ... 607

Application ... 607

18.8 Software numbers ... 608

Application ... 608

18.9 Entering the code number ... 608

Application ... 608

18.10 Setting up data interfaces....609

Serial interfaces on the TNC 640....609
Application....609
Setting the RS-232 interface....609
Set BAUD RATE (baud rate no. 106701)....609
Set protocol (protocol no. 106702)....610
Set data bits (dataBits no. 106703)....610
Check parity (parity no. 106704)....610
Set stop bits (stopBits no. 106705)....610
Set handshake (flowControl no. 106706)....611
File system for file operation (fileSystem no. 106707)....611
Block check character (bccAvoidCtrlChar no. 106708)....611
Condition of RTS line (rtsLow no. 106709)....611
Define behavior after receipt of ETX (noEotAfterEtx no. 106710)....612
Settings for the transmission of data using PC software TNCserver....612
Setting the operating mode of the external device (fileSystem)....613
Data transfer software....613

18.11 Ethernet interface....615

Introduction....615
Connection options....615
Configuring the TNC....615

18.12 Firewall....621

Application....621

18.13 Configure HR 550 FS wireless handwheel....624

Application....624
Assigning the handwheel to a specific handwheel holder....624
Setting the transmission channel....625
Selecting the transmitter power....625
Statistical data....626

18.14 Load machine configuration....627

Application....627

19 Tables and Overviews ... 629

19.1 Machine-specific user parameters ... 630

Application ... 630

19.2 Connector pin layout and connection cables for data interfaces ... 642

RS-232-C/V.24 interface for HEIDENHAIN devices ... 642
Non-HEIDENHAIN devices ... 644
Ethernet interface RJ45 socket ... 644

19.3 Technical Information ... 645

19.4 Overview tables ... 653

Fixed cycles ... 653
Miscellaneous functions ... 655

19.5 Functions of the TNC 640 and the iTNC 530 compared ... 657

Comparison: Specifications ... 657
Comparison: Data interfaces ... 657
Comparison: Accessories ... 658
Comparison: PC software ... 658
Comparison: Machine-specific functions ... 659
Comparison: User functions ... 659
Comparator: Cycles ... 667
Comparison: Miscellaneous functions ... 670
Compare: Touch probe cycles in Manual operation and Electric Handwheel operating modesElectronic handwheel ... 672
Comparison: Probing system cycles for automatic workpiece control ... 673
Comparison: Differences in programming ... 674
Comparison: Differences in Test Run, functionality ... 679
Comparison: Differences in Test Run, operation ... 679
Comparison: Differences in Manual Operation, functionality ... 680
Comparison: Differences in Manual Operation, operation ... 681
Comparison: Differences in Program Run, operation ... 681
Comparison: Differences in Program Run, traverse movements ... 682
Comparison: Differences in MDI operation ... 686
Comparison: Differences in programming station ... 687

19.6 DIN/ISO function overview ... 688

DIN/ISO Function Overview TNC 640 ... 688

1

First Steps with the TNC 640

1.1 Overview

This chapter is intended to help TNC beginners quickly learn to handle the most important procedures. For more information on a respective topic, see the section referred to in the text.

The following topics are included in this chapter:

- Machine switch-on
- Programming the first part
- Graphically testing the first part
- Setting up tools
- Workpiece setup
- Running the first program

1.2 Machine switch-on

Acknowledging the power interruption and moving to the reference points

Switch-on and crossing over the reference points can vary depending on the machine tool. Refer to your machine manual.

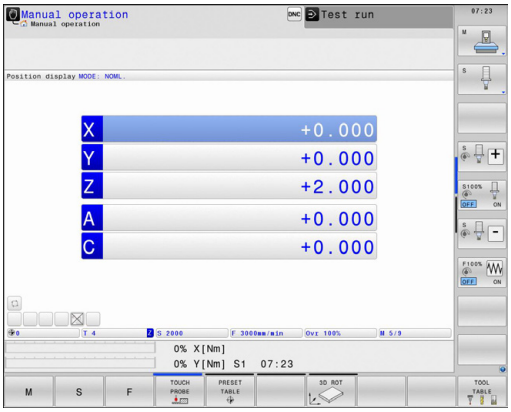

- Switch on the power supply for control and machine. The TNC starts the operating system. This process may take several minutes. Then the TNC will display the "Power interrupted" message in the screen header.

CE

- Press the **CE** key: The TNC compiles the PLC program

I

- Switch on the control voltage: The TNC checks operation of the emergency stop circuit and goes into Reference Run mode

- Cross the datums manually in the prescribed sequence: For each axis press the **START** key. If you have absolute linear and angle encoders on your machine there is no need for a reference run

The TNC is now ready for operation in the **Manual operation** mode.

Further information on this topic

- Approaching datums
  Further Information: Switch-on, page 490
- Operating modes
  Further Information: Programming, page 78

1.3 Programming the first part

Selecting the correct operating mode

You can write programs only in Programming mode:

- Press the Programming operating mode key for the TNC to switch to **Programming**

Further information on this topic

- Operating modes
  Further Information: Programming, page 78

The most important TNC keys

Key	Functions for conversational guidance
ENT	Confirm entry and activate the next dialog prompt
NO ENT	Ignore the dialog question
END	End the dialog immediately
DEL	Abort dialog, discard entries
	Soft keys on the screen with which you select functions appropriate to the active operating state

Further information on this topic

- Writing and editing programs
  Further Information: Editing a program, page 112
- Overview of keys
  Further Information: Controls of the TNC, page 2

Opening a new program/file management

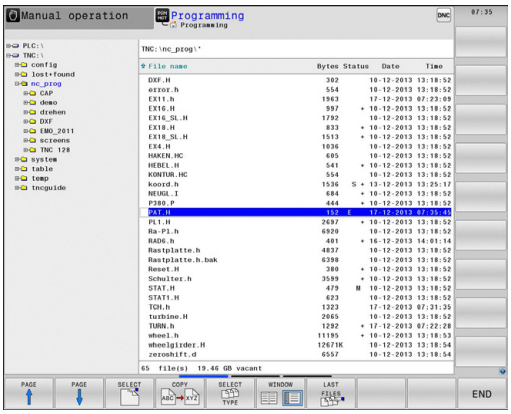

PGM MGT

- Press the **PGM MGT** key: The TNC opens the file manager The file management of the TNC is arranged much like the file management on a PC with the Windows Explorer. The file management enables you to manage data on the internal memory of the TNC
- Use the arrow keys to select the folder in which you want to open the new file
- Enter any desired file name with the extension **.I**

ENT

- Confirm with the **ENT** key: The control asks you for the unit of measurement for the new program

MM

- Select the unit of measure: Press the **MM** or **INCH** soft key

The TNC automatically generates the first and last blocks of the program. Afterwards you can no longer change these blocks.

Further information on this topic

- File management
  Further Information: Working with the file manager, page 119
- Creating a new program
  Further Information: Opening programs and entering, page 105

Defining a workpiece blank

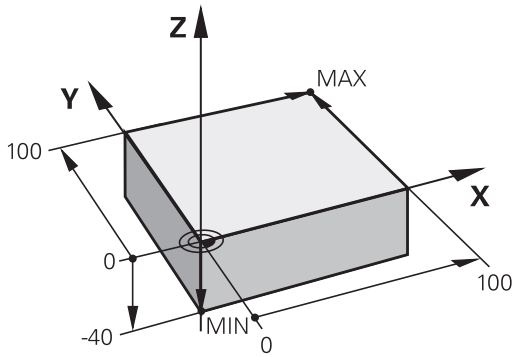

After you have created a new program you can define a workpiece blank. For example, define a cuboid by entering the MIN and MAX points, each with reference to the selected reference point.

After you have selected the desired blank form via soft key, the TNC automatically initiates the workpiece blank definition and asks for the required data:

- **Spindle axis Z - Plane XY**: Enter the active spindle axis. G17 is saved as default setting. Accept with the **ENT** key
- **Workpiece blank def.: Minimum X**: Enter the smallest X coordinate of the workpiece blank with respect to the reference point, e.g. 0, confirm with the **ENT** key
- **Workpiece blank def.: Minimum Y**: Smallest Y coordinate of the workpiece blank with respect to the reference point, e.g. 0. Confirm with the **ENT** key
- **Workpiece blank def.: Minimum Z**: Smallest Z coordinate of the workpiece blank with respect to the reference point, e.g. -40, confirm with the **ENT** key
- **Workpiece blank def.: Maximum X**: Enter the largest X coordinate of the workpiece blank with respect to the reference point, e.g. 100, confirm with the **ENT** key
- **Workpiece blank def.: Maximum Y**: Enter the largest Y coordinate of the workpiece blank with respect to the reference point, e.g. 100. Confirm with the **ENT** key
- **Workpiece blank def.: Maximum Z**: Enter the largest Z coordinate of the workpiece blank with respect to the reference point, e.g. 0. Confirm with the **ENT** key. The TNC concludes the dialog

Example NC blocks

```
%NEW G71 *
N10 G30 G17 X+0 Y+0 Z-40 *
N20 G31 X+100 Y+100 Z+0 *
N99999999 %NEW G71 *
```

Further information on this topic

- Define workpiece blank
  Further Information: Opening a new part program, page 109

Program layout

NC programs should be arranged consistently in a similar manner. This makes it easier to find your place, accelerates programming and reduces errors.

Recommended program layout for simple, conventional contour machining

1 Call tool, define tool axis
2 Retract the tool
3 Pre-position the tool in the working plane near the contour starting point
4 In the tool axis, position the tool above the workpiece, or preposition immediately to workpiece depth. If required, switch on the spindle/coolant
5 Contour approach
6 Contour machining
7 Contour departure
8 Retract the tool, end program

Further information on this topic

- Contour programming
  Further Information: Programming tool movements for workpiece machining, page 210

Layout of contour machining programs

```
%BSPCONT G71 *
N10 G30 G71 X... Y... Z... *
N20 G31 X... Y... Z... *
N30 T5 G17 S5000 *
N40 G00 G40 G90 Z+250 *
N50 X... Y... *
N60 G01 Z+10 F3000 M13 *
N70 X... Y... RL F500 *
...
N160 G40 ... X... Y... F3000 M9 *
N170 G00 Z+250 M2 *
N99999999 BSPCONT G71 *
```

Recommended program layout for simple cycle programs

1 Call tool, define tool axis
2 Retract the tool
3 Define the fixed cycle
4 Move to the machining position
5 Call the cycle, switch on the spindle/coolant
6 Retract the tool, end program

Further information on this topic

- Cycle programming
  Further information: Cycle Programming User's Manual

Cycle program layout

```
%BSBCYC G71 *
N10 G30 G71 X... Y... Z... *
N20 G31 X... Y... Z... *
N30 T5 G17 S5000 *
N40 G00 G40 G90 Z+250 *
N50 G200... *
N60 X... Y... *
N70 G79 M13 *
N80 G00 Z+250 M2 *
N99999999 BSBCYC G71 *
```

Programming a simple contour

The contour shown to the right is to be milled once to a depth of 5 mm You have already defined the workpiece blank. After you have initiated a dialog through a function key, enter all the data requested by the TNC in the screen header.

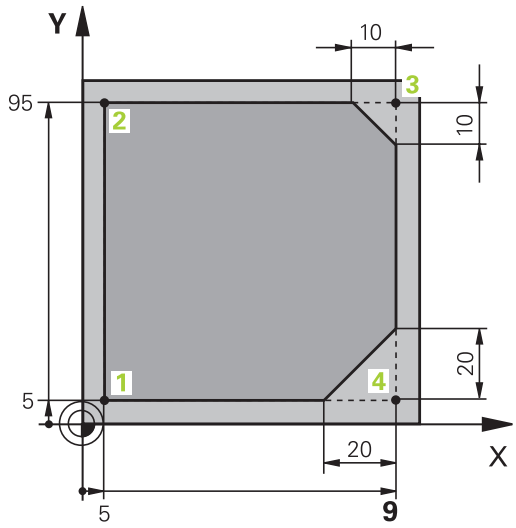

TOOL CALL
- Call the tool: Enter the tool data. Confirm each of your entries with the **ENT** key, do not forget the tool axis **G17**

L
- Press the **L** key to open a program block for a linear movement

←
- Press the left arrow key to switch to the input range for G codes

G00
- Press the **G00** soft key if you want to enter a rapid traverse motion

G90
- Press the **G90** soft key for absolute values

- Retract tool: Press the orange axis key **Z** and enter the value for the position to be approached, e.g. 250. Confirm with the **ENT** key

G40
- Activate no radius compensation: Press the **G40** soft key
- Confirm **Miscellaneous function M?** with the **END** key: The TNC saves the entered positioning block

L
- Press the **L** key to open a program block for a linear movement

←
- Press the left arrow key to switch to the input range for G codes

G00
- Press the **G00** soft key if you want to enter a rapid traverse motion
- Preposition the tool in the working plane: Press the orange **X** axis key and enter the value for the position to be approached, e.g. –20
- Press the orange axis key **Y** and enter the value for the position to be approached, e.g. -20. Confirm with ENT

G40
- Activate no radius compensation: Press the **G40** soft key
- Confirm **Miscellaneous function M?** with the **END** key: The TNC saves the entered positioning block

L
- Press the **L** key to open a program block for a linear movement

←
- Press the left arrow key to switch to the input range for G codes

G00
- Press the **G00** soft key if you want to enter a rapid traverse motion
- Move the tool to depth: Press the orange axis key **Z** and enter the value for the position to be approached, e.g. -5. Confirm with **ENT**

G40

- Activate no radius compensation: Press the **G40** soft key
- **Miscellaneous function M?** Switch on the spindle and coolant, e.g. **M13**, confirm with the **END** key: The TNC saves the entered positioning block
- Press the **L** key to open a program block for a linear movement
- Enter the coordinates of the contour starting point 1 in X and Y, e.g. 5/5. Confirm with the **ENT** key

G41

- Activate radius compensation to the left of the path: Press the **G41** soft key
- **Feed rate F=?** Enter the machining feed rate, e.g. 700 mm/min, save your entry with the **END** key

G

- Enter **26** to approach the contour: Define **Rounding-off radius?** for the circular arc, save entries with the **END** key
- Machine the contour and move to contour point 2: You only need to enter the information that changes. In other words, enter only the Y coordinate 95 and save your entry with the **END** key
- Move to contour point 3: Enter the X coordinate 95 and save your entry with the **END** key
- Define chamfer **G24** on contour point 3: **Chamfer side length?** Enter 10 mm, save with the **END** key
- Move to contour point 4: Enter the Y coordinate 5 and save your entry with the **END** key
- Define chamfer **G24** on contour point 4: **Chamfer side length?** Enter 20 mm, save with the **END** key
- Move to contour point 1: Enter the X coordinate 5 and save your entry with the **END** key

G

- Enter **27** to depart from the contour: Define the **Rounding-off radius?** of the departing arc
- Depart contour: Enter coordinates outside of the workpiece in X and Y, e.g. -20/-20, confirm with the **ENT** key
- Activate no radius compensation: Press the **G40** soft key

- Press the **L** key to open a program block for a linear movement
- Press the **G00** soft key if you want to enter a rapid traverse motion
- Retract the tool: Press the orange axis key **Z**, to retract in the tool axis, and enter the value for the position to be approached, e.g 250. Confirm with the **ENT** key
- Activate no radius compensation: Press the **G40** soft key
- **MISCELLANEOUS FUNCTION M?** Enter **M2** to end the program and confirm with the **END** key: The TNC saves the entered positioning block

Further information on this topic

- Complete example with NC blocks
  Further Information: Example: Linear movements and chamfers with Cartesian coordinates, page 233
- Creating a new program
  Further Information: Opening programs and entering, page 105
- Approaching/departing contour
  Further Information: Approaching and departing a contour, page 213
- Programming contours
  Further Information: Overview of path functions, page 224
- Tool radius compensation
  Further Information: Tool radius compensation , page 195
- Miscellaneous functions M
  Further Information: Miscellaneous functions for program run inspection, spindle and coolant , page 358

Creating a cycle program

The holes (depth of 20 mm) shown in the figure at right are to be drilled with a standard drilling cycle. You have already defined the workpiece blank.

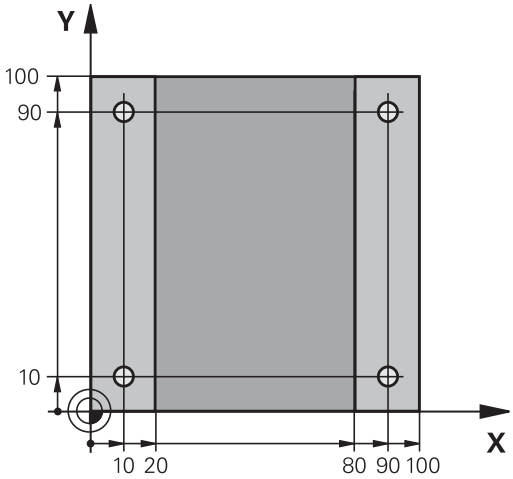

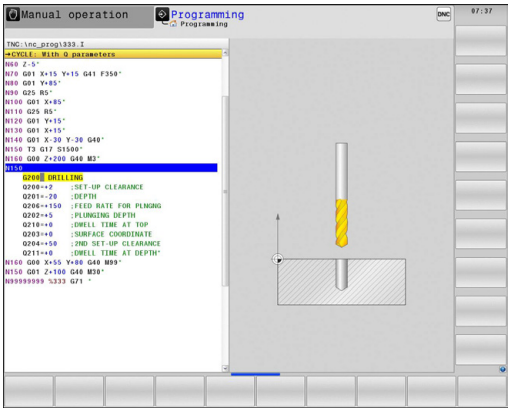

TOOL CALL
- Call the tool: Enter the tool data. Confirm each of your entries with the **ENT** key. Do not forget the tool axis

L
- Press the **L** key to open a program block for a linear movement

←
- Press the left arrow key to switch to the input range for G codes

G00
- Press the **G00** soft key if you want to enter a rapid traverse motion
- Press the **G90** soft key for absolute values
- Retract tool: Press the orange axis key **Z** and enter the value for the position to be approached, e.g. 250. Press the **ENT** key
- Activate no radius compensation: Press the **G40** soft key
- **Miscellaneous function M?** Switch on the spindle and coolant, e.g. **M13**. Confirm with the **END** key: The TNC saves the entered positioning block

CYCL DEF
- Call the cycle menu

DRILLING/ THREAD
- Display the drilling cycles

200
- Select the standard drilling cycle 200: The TNC starts the dialog for cycle definition. Enter all parameters requested by the TNC step by step and conclude each entry with the **ENT** key. In the screen to the right, the TNC also displays a graphic showing the respective cycle parameter

G
- Enter **0** to approach the first drilling position: Enter the **coordinates** of the drilling position, call the cycle with **M99**

G
- Enter **0** to move to further drilling positions: Enter the **coordinates** of the specific drilling positions, and call the cycle with **M99**

G
- Enter **0** to retract the tool: Press the orange axis key **Z** and enter the value for the position to be approached, e.g. 250. Press the **ENT** key
- **Miscellaneous function M?** Enter **M2** to end the program and confirm with the **END** key: The TNC saves the entered positioning block

Example NC blocks

%C200 G71 *	
N10 G30 G17 X+0 Y+0 Z-40 *	Definition of workpiece blank
N20 G31 X+100 Y+100 Z+0 *	
N30 T5 G17 S4500 *	Tool call
N40 G00 G90 Z+250 G40 *	Retract the tool
N50 G200 DRILLING	Define the cycle
Q200=2 ;SET-UP CLEARANCE	
Q201=-20 ;DEPTH	
Q206=250 ;FEED RATE FOR PLNGNG	
Q202=5 ;PLUNGING DEPTH	
Q210=0 ;DWELL TIME AT TOP	
Q203=-10 ;SURFACE COORDINATE	
Q204=20 ;2ND SET-UP CLEARANCE	
Q211=0.2 ;DWELL TIME AT DEPTH	
Q395=0 ;DEPTH REFERENCE	
N60 G00 X+10 Y+10 M13 M99 *	Spindle and coolant on, call the cycle
N70 G00 X+10 Y+90 M99 *	Call the cycle
N80 G00 X+90 Y+10 M99 *	Call the cycle
N90 G00 X+90 Y+90 M99 *	Call the cycle
N100 G00 Z+250 M2 *	Retract the tool, end program
N99999999 %C200 G71 *	

Further information on this topic

- Creating a new program
  Further Information: Opening programs and entering, page 105
- Cycle Programming
  Further information Cycle Programming User's Manual

1.4 Graphically testing the first part

Selecting the correct operating mode

You can test programs in the **Test Run** mode:

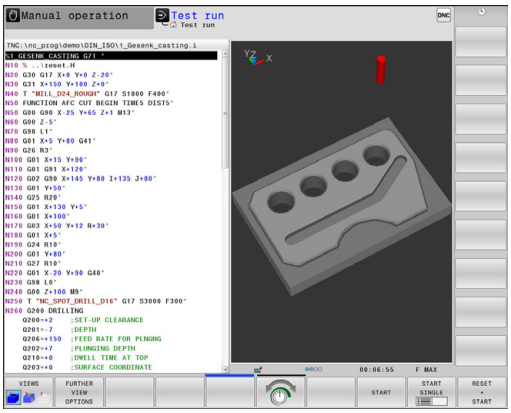

- Press the **Test Run** operating mode key: the TNC switches to that mode

Further information on this topic

- Operating modes of the TNC
  Further Information: Modes of operation, page 77
- Testing programs
  Further Information: Test run, page 579

Selecting the tool table for the test run

If you have not yet activated a tool table in **Test Run** mode, then you must carry out this step.

- Press the **PGM MGT** key: The TNC opens the file manager
- Press the **SELECT TYPE** soft key: The TNC shows a soft-key menu for selection of the file type to be displayed
- Press the **DEFAULT** soft key: The TNC shows all saved files in the right-hand window
- Move the cursor to the left onto the directories
- Move the cursor to the **TNC:\table** directory
- Move the cursor to the right onto the files
- Move the highlight to the file TOOL.T (active tool table) and load with the **ENT** key: TOOL.T receives the status **S** and is therefore active for the test run
- Press the **END** key: Exit the file manager

Further information on this topic

- Tool management
  Further Information: Enter tool data into the table, page 176
- Testing programs
  Further Information: Test run, page 579

Choosing the program you want to test

- Press the **PGM MGT** key: The TNC opens the file manager

- Press the **LAST FILES** soft key: The TNC opens a pop-up window with the most recently selected files
- Use the arrow keys to select the program that you want to test. Load with the **ENT** key

Further information on this topic

- Program number
  Further Information: Working with the file manager, page 119

Selecting the screen layout and the view

- Press the key for selecting the screen layout. The TNC shows all available alternatives in the soft-key row

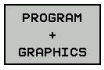

- Press the **PROGRAM + GRAPHICS** soft key: In the left half of the screen the TNC shows the program; in the right half it shows the workpiece blank

The TNC features the following views:

Soft keys	Function
	Volume view
	Volume view and tool paths
	Tool paths

Further information on this topic

- Graphic functions
  Further Information: Graphics , page 568
- Performing a test run
  Further Information: Test run, page 579

Starting the test run

- Press the **RESET + START** soft key: The TNC simulates the active program up to a programmed break or to the program end
- While the simulation is running, you can use the soft keys to change views

- Press the **STOP** soft key: The TNC interrupts the test run

- Press the **START** soft key: The TNC resumes the test run after a break

Further information on this topic

- Performing a test run
  Further Information: Test run, page 579
- Graphic functions
  Further Information: Graphics , page 568
- Adjusting the simulation speed
  Further Information: Speed of the setting test runs, page 569

1.5 Setting up tools

Selecting the correct operating mode

Tools are set up in the **Manual Operation** mode:

- Press the Manual Operation operating mode key for the TNC to switch to **Manual operation**

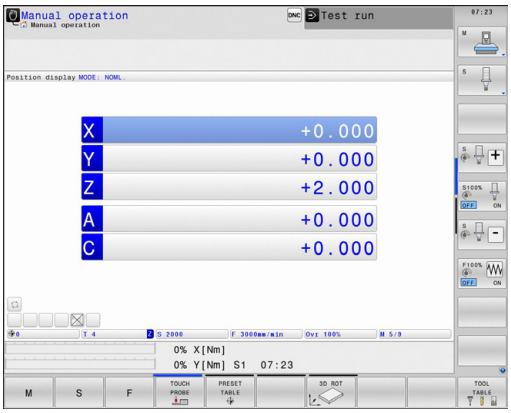

Further information on this topic

- Operating modes of the TNC
  Further Information: Modes of operation, page 77

Preparing and measuring tools

- Clamp the required tools in their tool holders
- When measuring with an external tool presetter: Measure the tools, note down the length and radius, or transfer them directly to the machine through a transfer program
- When measuring on the machine: store the tools in the tool changer
  Further Information: The pocket table TOOL_P.TCH, page 69

The tool table TOOL.T

In the tool table TOOL.T (permanently saved under **TNC:\table**), save the tool data such as length and radius, but also further tool-specific information that the TNC needs to perform its functions.

To enter tool data in the tool table TOOL.T, proceed as follows:

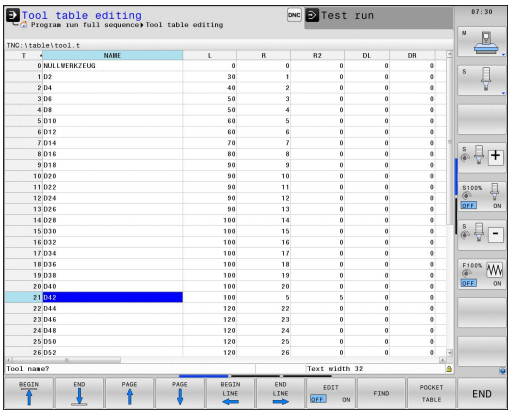

- Display the tool table: The TNC shows the tool table

- Edit the tool table: Set the **EDIT** soft key to **ON**
- With the upward or downward arrow keys you can select the tool number that you want to edit
- With the rightward or leftward arrow keys you can select the tool data that you want to edit
- To exit the tool table, press the **END** key

Further information on this topic

- Operating modes of the TNC
  Further Information: Modes of operation, page 77
- Working with the tool table
  Further Information: Enter tool data into the table, page 176

The pocket table TOOL_P.TCH

The function of the pocket table depends on the machine. Refer to your machine manual.

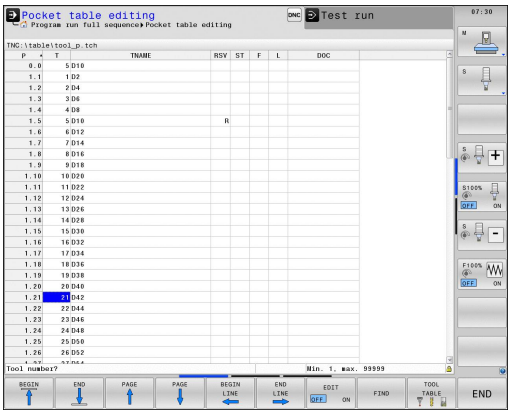

In the pocket table TOOL_P.TCH (permanently saved under **TNC:\table**) you specify which tools your tool magazine contains.

To enter data in the pocket table TOOL_P.TCH, proceed as follows:

- Display the tool table: The TNC shows the tool table

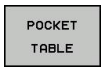

- Display the pocket table: The TNC shows the pocket table
- Edit the pocket table: Set the **EDIT** soft key to **ON**
- With the upward or downward arrow keys you can select the pocket number that you want to edit
- With the rightward or leftward arrow keys you can select the data that you want to edit
- To leave the pocket table, press the **END** key

Further information on this topic

- Operating modes of the TNC
  Further Information: Modes of operation, page 77
- Working with the pocket table
  Further Information: Pocket table for tool changer, page 184

1.6 Workpiece setup

Selecting the correct operating mode

Workpieces are set up in the **Manual operation** or **Electronic handwheel** mode

- Press the Manual Operation operating mode key for the TNC to switch to **Manual operation**

Further information on this topic

- Operating mode **Manual operation**
  Further Information: Moving the machine axes, page 493

Clamping the workpiece

Mount the workpiece with a fixture on the machine table. If you have a 3-D touch probe on your machine, then you do not need to clamp the workpiece parallel to the axes.

If you do not have a 3-D touch probe available, you have to align the workpiece so that it is fixed with its edges parallel to the machine axes.

Further information on this topic

- Setting datums with a 3-D touch probe
  Further Information: Datum setting with a 3-D touch probe , page 538
- Setting datums without 3-D touch probe
  Further Information: Datum setting without a 3-D touch probe, page 518

Datum setting with a 3-D touch probe

- Insert a 3-D touch probe: In the **Positioning with Manual Data Input** mode, run a **TOOL CALL** block containing the tool axis and then return to the **Manual Operation** mode

- Select the probing functions: The TNC displays all available functions in the soft key row

- Set the datum at a workpiece corner, for example
- Position the touch probe near the first touch point on the first workpiece edge
- Select the probing direction via soft key
- Press **NC START**: The touch probe moves in the defined direction until it contacts the workpiece and then automatically returns to its starting point
- Use the axis direction keys to pre-position the touch probe to a position near the second touch point on the first workpiece edge
- Press NC start: The touch probe moves in the defined direction until it contacts the workpiece and then automatically returns to its starting point
- Use the axis direction keys to pre-position the touch probe to a position near the first touch point on the second workpiece edge
- Select the probing direction via soft key
- Press NC start: The touch probe moves in the defined direction until it contacts the workpiece and then automatically returns to its starting point
- Use the axis direction keys to pre-position the touch probe to a position near the second touch point on the second workpiece edge
- Press NC start: The touch probe moves in the defined direction until it contacts the workpiece and then automatically returns to its starting point
- Then the TNC shows the coordinates of the measured corner point

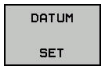

- To set to 0: Press the **SET DATUM** soft key
- Press the **END** soft key to close the menu

Further information on this topic

- Setting datums
  Further Information: Datum setting with a 3-D touch probe , page 538

1.7 Running the first program

Selecting the correct operating mode

You can run programs either in the **Program run, single block** or the **Program run, full sequence** mode:

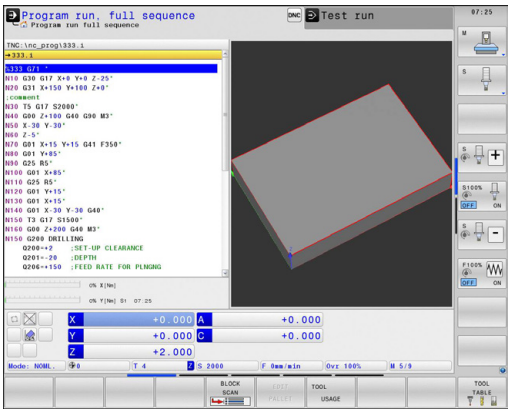

- Press the operating mode key: Die TNC changes operating mode **Program run, single block**, and the TNC executes the NC program block by block . You have to confirm each block with the **NC START KEY**

- Press the **Program run, full sequence** operating mode key: The TNC switches to that mode and runs the program after NC start-up to a program interruption or to the end of the program

Further information on this topic

- Operating modes of the TNC
  Further Information: Modes of operation, page 77
- Executing a program
  Further Information: Program run, page 581

Choosing the program you want to run

- Press the **PGM MGT** key: The TNC opens the file manager

- Press the **LAST FILES** soft key: The TNC opens a pop-up window with the most recently selected files
- If desired, use the arrow keys to select the program that you want to run. Load with the **ENT** key

Further information on this topic

- File management
  Further Information: Working with the file manager, page 119

Start the program

- Press the **NC START** key: The TNC runs the active program

Further information on this topic

- Executing a program
  Further Information: Program run, page 581

2

Introduction

2.1 The TNC 640

HEIDENHAIN TNC controls are workshop-oriented contouring controls that enable you to program conventional milling and drilling operations right at the machine in an easy-to-use conversational programming language. They are designed for milling, drilling and boring machines, as well as machining centers, with up to 18 axes. You can also change the angular position of the spindle under program control.

An integrated hard disk provides storage for as many programs as you like, even if they were created off-line. For quick calculations you can call up the on-screen pocket calculator at any time.

Keyboard and screen layout are clearly arranged in such a way that the functions are fast and easy to use.

Programming: In HEIDENHAIN conversational and DIN/ISO

The HEIDENHAIN conversational dialog is an especially easy method of writing programs. Programming graphics illustrate the individual machining steps for programming the contour. If no NC-dimensioned drawing is available, then the FK free contour programming will help. Workpiece machining can be graphically simulated either during a test run or during a program run.

It is also possible to program in ISO format or DNC mode.

You can also enter and test one program while the control is running another.

Compatibility

Machining programs created on HEIDENHAIN contouring controls (starting from the TNC 150 B) may not always run on the TNC 640. If the NC blocks contain invalid elements, the TNC will mark these as ERROR blocks or with error messages when the file is opened.

Please also note the detailed description of the differences between the iTNC 530 and the TNC 640. **Further Information:** Functions of the TNC 640 and the iTNC 530 compared, page 657.

2.2 Visual display unit and operating panel

Display screen

The TNC is shipped with a 19-inch TFT flat-panel display.

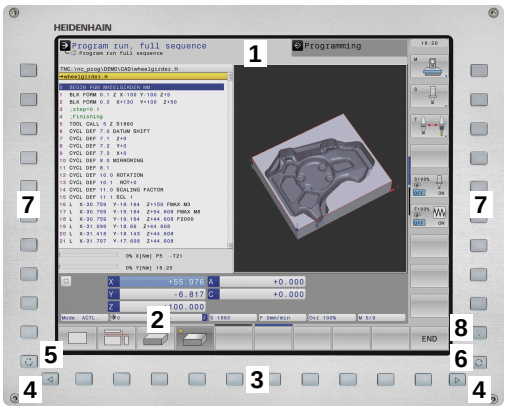

1 Header

When the TNC is on, the selected operating modes are shown in the screen header: the machining mode at the left and the programming mode at right. The currently active operating mode is displayed in the larger box, where the dialog prompts and TNC messages also appear (unless the TNC is showing only graphics).

2 Soft keys

In the footer the TNC indicates additional functions in a soft-key row. You can select these functions by pressing the keys immediately below them. The thin bars immediately above the soft-key row indicate the number of soft-key rows that can be called with the keys to the right and left that are used to switch the soft keys. The bar representing the active soft-key row is highlighted

3 Soft-key selection keys

4 Keys for switching the soft keys

5 Setting the screen layout

6 Shift key for switchover between machining and programming modes

7 Soft-key selection keys for machine tool builders

8 Keys for switching the soft keys for machine tool builders

Set screen layout

You select the screen layout yourself: In the **Programming** mode, for example, you can have the TNC show program blocks in the left window while the right window displays programming graphics. You could also display the program structure in the right window instead, or display only program blocks in one large window. The available screen windows depend on the selected operating mode.

Set up screen layout:

- Press the screen switchover key: The soft key row shows the available layout options
  Further Information: Modes of operation, page 77

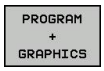

- Select the desired screen layout with a soft key

Control panel

The TNC 640 is delivered with an integrated operating panel. The figure to the right shows the operating elements of the operating panel:

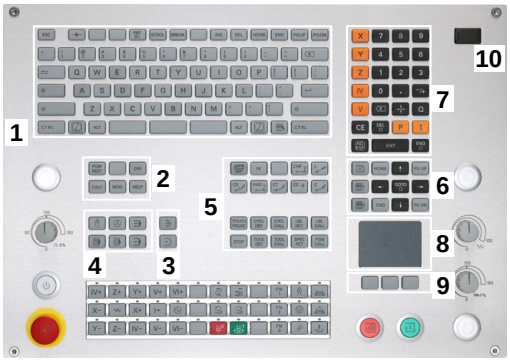

1 Alphabetic keyboard for entering texts and file names, as well as for ISO programming

2
- File management
- Calculator
- MOD function
- HELP function

3 Programming modes

4 Machine operating modes

5 Initiating programming dialogs

6 Navigation keys and **GOTO** jump command

7 Numerical input and axis selection

8 Touchpad

9 Mouse buttons

10 USB connection

The functions of the individual keys are described on the inside front cover.

> Some machine manufacturers do not use the standard operating panel from HEIDENHAIN. Refer to your machine manual.
>
> External keys, e.g. **NC START** or **NC STOP**, are described in your machine manual.

2.3 Modes of operation

Manual Operation and El. Handwheel

The **Manual Operation** mode is required for setting up the machine tool. In this mode of operation, you can position the machine axes manually or by increments, set the datums and tilt the working plane.

The **El. Handwheel** mode of operation allows you to move the machine axes manually with the HR electronic handwheel.

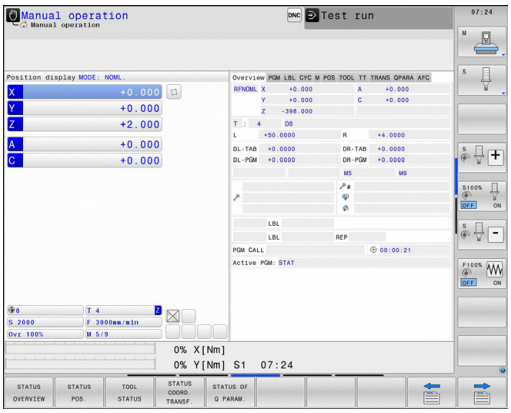

Soft keys for selecting the screen layout (select as described previously)

Soft key	Window
POSITION	Positions
POSITION + STATUS	Left: positions, right: status display
POSITION + KINEMATICS	Left: positions, right: collision object

Positioning with Manual Data Input

This mode of operation is used for programming simple traversing movements, such as for face milling or prepositioning.

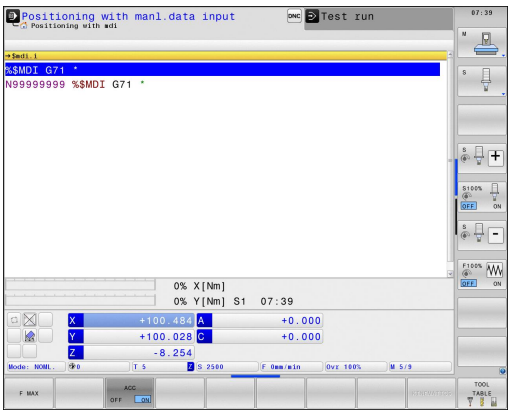

Soft keys for selecting the screen layout

Soft key	Window
PGM	Program
PROGRAM + STATUS	Left: program, right: status display
POSITION + KINEMATICS	Left: program, right: collision object

Programming

In this operating mode you can write your machining programs. The FK free programming feature, the various cycles and the Q parameter functions help you with programming and add necessary information. If desired, you can have the programming graphics show the programmed paths of traverse.

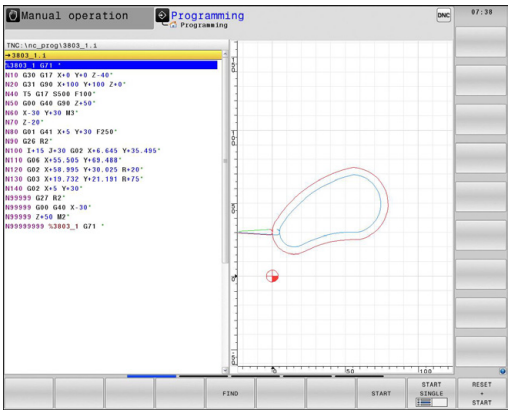

Soft keys for selecting the screen layout

Soft key	Window
PGM	Program
PROGRAM + SECTS	Left: program, right: program structure
PROGRAM + GRAPHICS	Left: program blocks, right: programming graphics

Test Run

In the **Test Run** mode of operation, the TNC checks programs and program sections for errors, such as geometrical incompatibilities, missing or incorrect data within the program or violations of the working space. This simulation is supported graphically in different display modes.

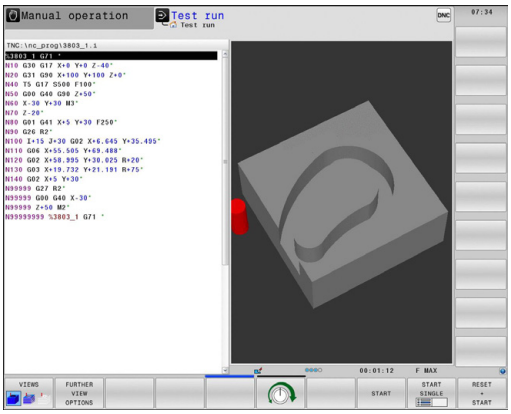

Soft keys for selecting the screen layout

Soft key	Window
PGM	Program
PROGRAM + STATUS	Left: program, right: status display
PROGRAM + GRAPHICS	Left: program, right: graphics
GRAPHICS	Graphic

Program Run, Full Sequence and Program Run, Single Block

In the **Program run full sequence** mode, the TNC executes a program continuously to its end or to a manual or programmed stop. You can resume program run after an interruption.

In the **Program run single block** mode, you execute each block separately by pressing the **NC START** key. With point pattern cycles and **CYCL CALL PAT**, the control stops after each point.

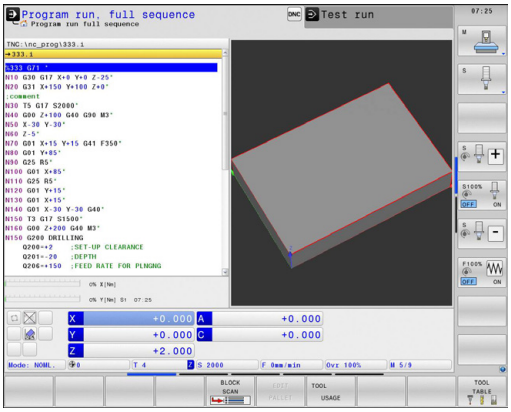

Soft keys for selecting the screen layout

Soft key	Window
PGM	Program
PROGRAM + STATUS	Left: program, right: status display
PROGRAM + GRAPHICS	Left: program, right: graphics
GRAPHICS	Graphic
POSITION + KINEMATICS	Left: program, right: collision object
KINEMATICS	Collision body

Soft key	Window
PALLET	Pallet table
PROGRAM + PALLET	Left: program, right: pallet table
PALLET + STATUS	Left: pallet table, right: status display
PALLET + GRAPHICS	Left: pallet table, right: graphics

2.4 Status displays

General status display

The general status display in the lower part of the screen informs you of the current state of the machine.

It is displayed automatically in the following operating modes:

- **Program Run, Single Block**
- **Program Run, Full Sequence**
- **Positioning with Manual Data Input**

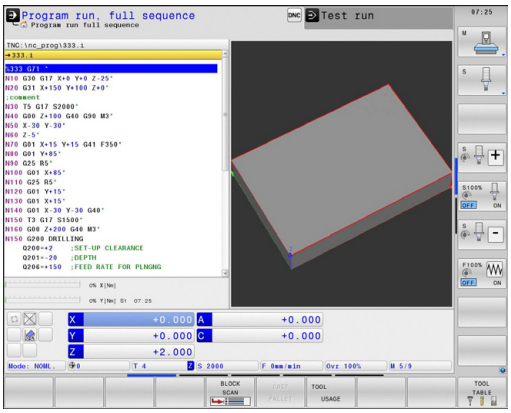

If the screen layout **GRAPHICS** is selected, then the status display is not shown.

In the **Manual Operation** and **El. Handwheel** modes the status display appears in the large window.

Information in the status display

Icon	Meaning
ACTL.	Position display: Actual, nominal or distance-to-go coordinates mode
X Y Z	Machine axes; the TNC displays auxiliary axes in lower-case letters. The sequence and quantity of displayed axes is determined by the machine tool builder. Refer to your machine manual for more information
	Number of the active presets from the preset table. If the datum was set manually, the TNC displays the text **MAN** behind the symbol
F S M	The displayed feed rate in inches corresponds to one tenth of the effective value. Spindle speed S, feed rate F and active M functions
	Axis is clamped
	Axis can be moved with the handwheel
	Axes are moving under a basic rotation
	Axes are moving under a 3-D basic rotation
	Axes are moving in a tilted working plane
TC PM	**M128** is active

Icon	Meaning
	No active program
	Program run has started
	Program run is stopped
	The program has been interrupted **Further Information:** Interrupt machining, page 583
	Program run is being aborted
	Turning mode is active
	The Dynamic Collision Monitoring function (DCM) is active (Option #40)
	The Adaptive Feed Function (AFC) is active (Option #45)
ACC	The Active Chatter Control (ACC) function is active (option number 145)
CTC	The CTC function is active (Option #141)

Additional status displays

The additional status displays contain detailed information on the program run. They can be called in all operating modes except for the **Programming** mode.

To switch on the additional status display

- Call the soft key row for screen layout
- Select the screen layout with additional status display: In the right half of the screen, the TNC shows the **OVERVIEW** status form

To select an additional status display

- Toggle through the soft key rows until the **STATUS** soft keys appear
- Either select the additional status display directly with the soft key, e.g. positions and coordinates; or
- use the switch-over soft keys to select the desired view

The available status displays described below can be selected either directly with the soft key or with the switchover soft keys.

Please note that some of the status information described below is not available unless the associated software option is enabled on your TNC.

Overview

The TNC shows the status form **Overview** after your turn on the TNC provided you have selected the **PROGRAM + STATUS** (or **POSITION + STATUS**) screen layout. The overview form contains a summary of the most important status information, which you can also find on the various detail forms.

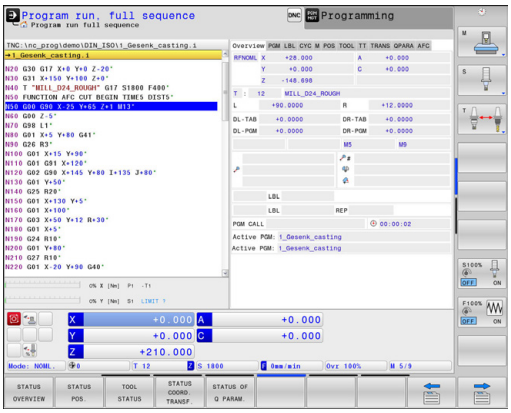

Soft key	Meaning
STATUS OVERVIEW	Position display
	Tool information
	Active M functions
	Active coordinate transformations
	Active subprogram
	Active program section repeat
	Program called with **PGM CALL**
	Current machining time
	Name of the active main program

General program information (PGM tab)

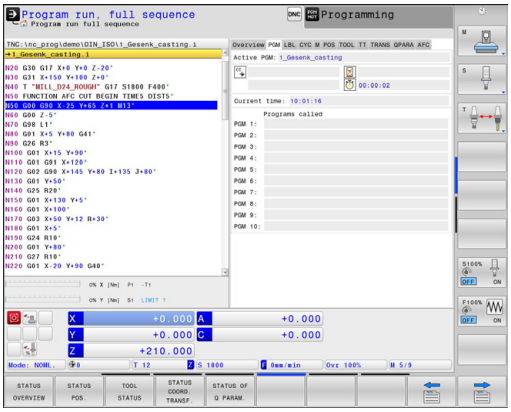

Soft key	Meaning
No direct selection possible	Name of the active main program
	Circle center CC (pole)
	Dwell time counter
	Machining time when the program was completely simulated in the **Test Run** operating mode
	Current machining time in percent
	Current time
	Active programs

Program section repeat/Subprograms (LBL tab)

Soft key	Meaning
No direct selection possible	Active program section repeats with block number, label number, and number of programmed repeats/repeats yet to be run
	Active subprograms with block number in which the subprogram was called and the label number that was called

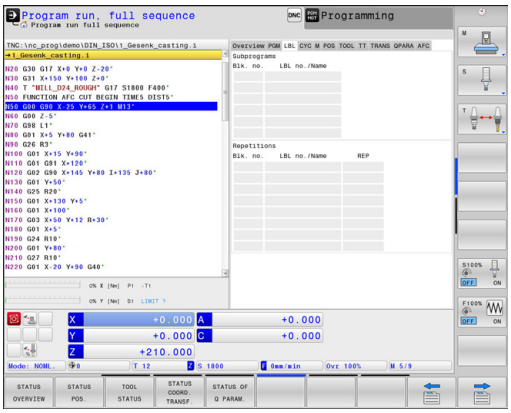

Information on standard cycles (CYC tab)

Soft key	Meaning
No direct selection possible	Active fixed cycle
	Active values of Cycle 32 Tolerance

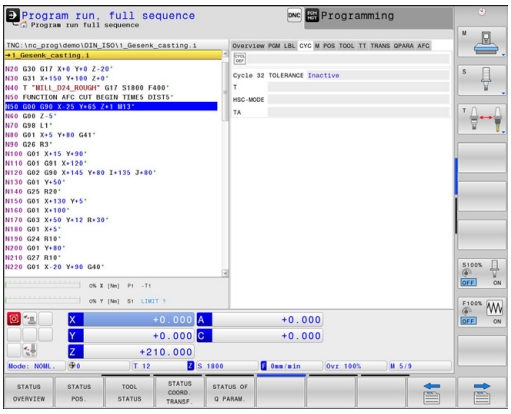

Active miscellaneous functions M (M tab)

Soft key	Meaning
No direct selection possible	List of the active M functions with fixed meaning
	List of the active M functions that are adapted by your machine manufacturer

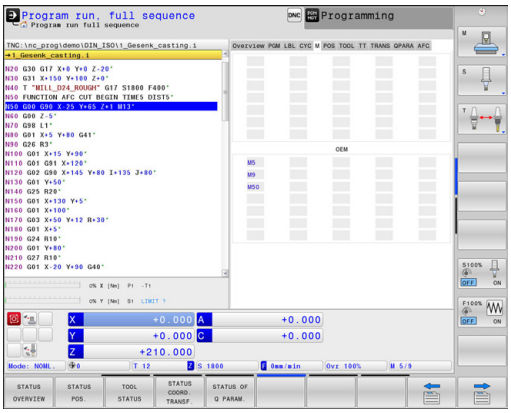

Positions and coordinates (POS tab)

Soft key	Meaning
STATUS POS.	Type of position display, e.g. actual position
	Tilt angle of the working plane
	Angle of a basic rotation
	Active kinematics

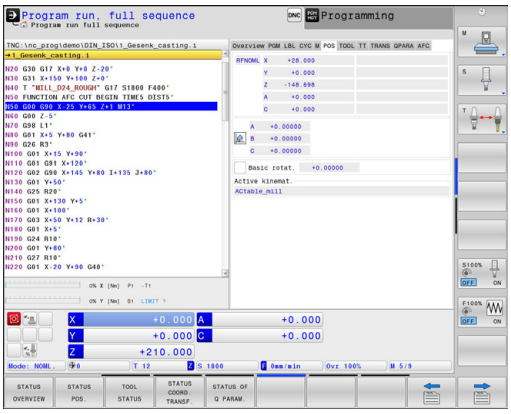

Information on tools (TOOL tab)

Soft key	Meaning
TOOL STATUS	Display of active tool: ■ T: Tool number and tool name ■ RT: Number and name of a replacement tool
	Tool axis
	Tool length and tool radii
	Oversizes (delta values) from the tool table (TAB) and the **TOOL CALL** (PGM)
	Tool life, maximum tool life (TIME 1) and maximum tool life for **TOOL CALL** (TIME 2)
	Display of programmed tool and replacement tool

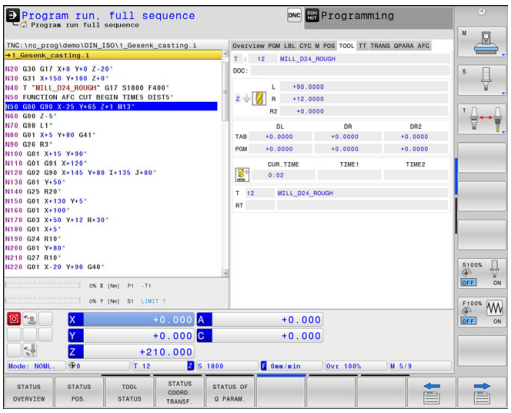

Tool measurement (TT tab)

The TNC displays the TT tab only if the function is active on your machine.

Soft key	Meaning
No direct selection possible	Number of the tool to be measured
	Display whether the tool radius or the tool length is being measured
	MIN and MAX values of the individual cutting edge measurement and the result of measuring the rotating tool (DYN = dynamic measurement)
	Cutting edge number with the corresponding measured value. If the measured value is followed by an asterisk, the tolerance in the tool table was exceeded

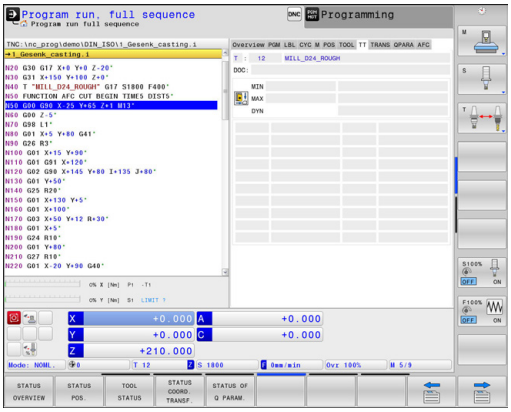

Coordinate transformations (TRANS tab)

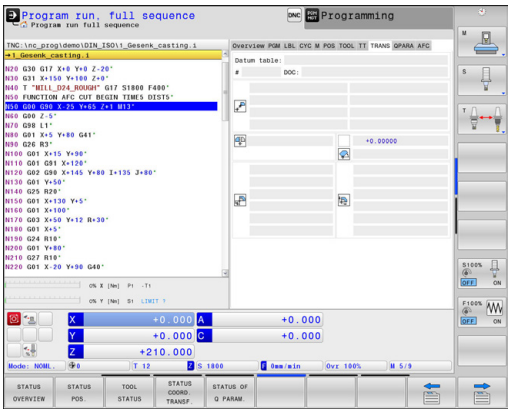

Soft key	Meaning
STATUS COORD. TRANSF.	Name of the active datum table
	Active datum number (**#**), comment from the active line of the active datum number (**DOC**) from Cycle G53
	Active datum shift (Cycle G54); The TNC displays an active datum shift in up to 8 axes
	Mirrored axes (Cycle G28)
	Active basic rotation
	Active rotation angle (Cycle G73)
	Active scaling factor/factors (Cycles G72); The TNC displays an active scaling factor in up to 6 axes
	Scaling datum

Further information: Cycle Programming User's Manual

Displaying Q parameters (QPARA tab)

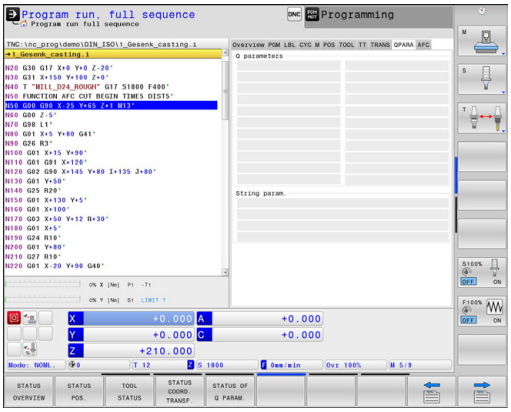

Soft key	Meaning
STATUS OF Q PARAM.	Display the current values of the defined Q parameters
	Display the character strings of the defined string parameters

Press the **Q PARAMETER LIST** soft key. The TNC opens a pop-up window. For each parameter type (Q, QL, QR, QS), define the parameter numbers you wish to control. Separate single Q parameters with a comma, and connect sequential Q parameters with a hyphen, e.g. 1,3,200-208. The input range per parameter type is 132 characters.

The display in the **QPARA** tab always contains eight decimal places. The result of Q1 = COS 89.999 is shown by the control as 0.00001745, for example. Very large and very small values are displayed by the control in exponential notation. The result of Q1 = COS 89.999 * 0.001 is shown by the control as +1.74532925e-08, whereby e-08 corresponds to the factor of 10^{-8}.

Adaptive Feed Control (AFC tab, Option #45)

The TNC displays the AFC tab only if the function is active on your machine.

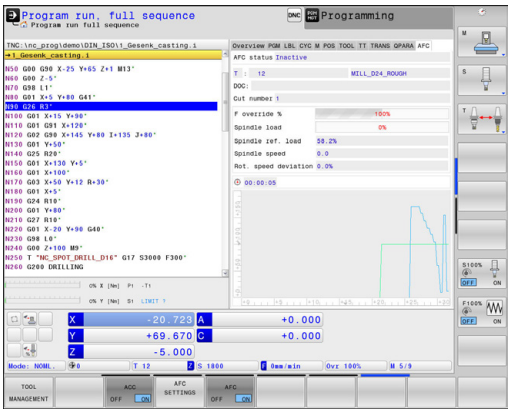

Soft key	Meaning
No direct selection possible	Active tool (number and name)
	Cut number
	Current factor of the feed potentiometer in %
	Active spindle load in percent
	Reference load of the spindle
	Current spindle speed
	Current deviation of the speed
	Current machining time
	Line diagram, in which the current spindle load and the value commanded by the TNC for the feed rate override are shown

2.5 Window manager

The machine tool builder determines the available functions and behavior of the window manager. Refer to your machine manual.

The TNC features the Xfce window manager. Xfce is a standard application for UNIX-based operating systems, and is used to manage graphical user interfaces. The following functions are possible with the window manager:

- Display a task bar for switching between various applications (user interfaces)
- Manage an additional desktop, on which special applications from your machine manufacturer can run
- Control the focus between NC software applications and those of the machine manufacturer
- The size and position of pop-up windows can be changed. It is also possible to close, minimize and restore pop-up windows

The TNC shows a star in the upper left of the screen if an application of the window manager or the window manager itself has caused an error In this case, switch to the window manager and correct the problem. If required, refer to your machine manual.

Task bar

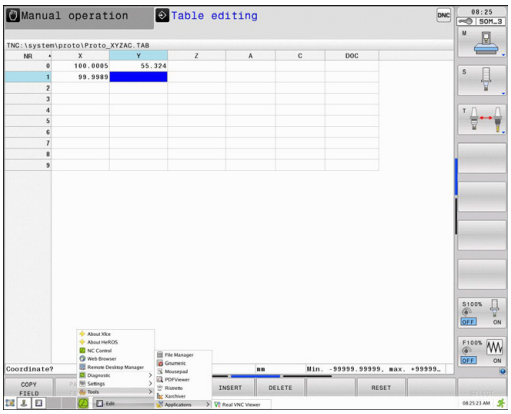

In the task bar you can choose different workspaces by mouse click. The TNC provides the following workspaces:

- Workspace 1: Active operating mode
- Workspace 2: Active programming mode
- Workspace 3: Manufacturer's applications (optionally available)

In addition, you can also select other applications from the task bar, which you have started in parallel to the TNC. E.g. Switch to the **PDF viewer** or the **TNCguide**.

Click the green HEIDENHAIN symbol to open a menu in which you can get information, make settings or start applications. The following functions are available:

- **About HEROS**: Information about the operating system of the TNC
- **NC Control**: Start and stop the TNC software. Only permitted for diagnostic purposes
- **Web Browser**: Start web browser
- **Remote Desktop Manager** (Option #133): Display and remote operation of external computer units
- **Diagnostics**: Available only to authorized specialists to start diagnostic functions
- **Settings**: Configuration of miscellaneous settings
  - **Date/Time**: Set the date and time
  - **Language**: System dialog language setting. During startup, the TNC overwrites this setting with the language setting of the machine parameter **CfgDisplayLanguage** (No 101300)
  - **Network**: Network settings of the control
  - **Screensaver**: Screensaver settings
  - **SELinux**: Security software settings for Linux-based operating systems
  - **Shares**: Settings for external network drives
  - **VNC**: Setting for external softwares that access for maintenance purposes on the control for example (**V**irtual **N**etwork **C**omputing)
  - **WindowManagerConfig**: Available only to authorized specialists for setting the window manager
  - **Firewall**: Firewall settings
    Further Information: Firewall, page 621
- **Tools**: Only for authorized users. The applications available under tools can be started directly by selecting the pertaining file type in the file management of the TNC
  Further Information: File management: Basics, page 116

2.6 Remote Desktop Manager (option 133)

Introduction

The Remote Desktop Manager enables you to display external computer units on the TNC screen that are connected via Ethernet and to operate them over the TNC. You can also start programs specifically under HeROS or display web pages of an external server.

The following connection options are available:

- **Windows Terminal Server (RDP)**: Displays the desktop of a remote Windows computer on the control
- **Windows Terminal Server (RemoteFX)**: Displays the desktop of a remote Windows computer on the control
- **VNC**: Connection to an external computer (e.g. HEIDENHAIN-IPC). Displays the desktop of a remote Windows or Unix computer on the control
- **Switch-off/restart of a computer**: Available only to authorized specialists
- **World Wide Web**: Available only to authorized specialists
- **SSH**: Available only to authorized specialists
- **XDMCP**: Available only to authorized specialists
- **User-defined connection**: Available only to authorized specialists

HEIDENHAIN assures a functioning connection between HeROS 5 and the IPC 6341. HEIDENHAIN cannot guarantee the correct function of any other combinations or connections to external devices.

Configuring connections – Windows Terminal Service

Configuring an external computer

> You do not need additional software for your external computer for connecting to the Windows Terminal Service.

Proceed as follows to configure the external computer, e.g. in the Windows 7 operating system:

- After pressing the Windows start button select the menu item **System control** via the task bar
- Select the **System** menu item
- Select the **Advanced system settings** menu item
- Select the **Remote** tab
- In the **Remote support** area, activate the function **Permit remote support connection with this computer**
- In the **Remote desktop** area, activate the function **Permit connections from computers on which any version of remote desktop is installed**
- Confirm the settings via the **OK** button

Configuring the TNC

> Depending on the operating system of your external computer and the protocol used in accordance with this, select either **Windows Terminal Service (RDP)** or **Windows Terminal Service (RemoteFX)**.

Configure the TNC as follows:

- After pressing the green HEIDENHAIN button, select the menu item **Remote Desktop Manager** via the task bar
- Press the **New connection** button in the **Remote Desktop Manager** window
- Select the menu item **Windows Terminal Service (RDP)** or **Windows Terminal Service (RemoteFX)**
- Specify the required connection information in the **Edit connection** window

Setting	Meaning	Input
Connection name	Name of the connection in the Remote Desktop Manager	Required
Restarting after end of connection	Behavior with terminated connection: ■ Always restart ■ Never restart ■ Always after an error ■ Ask after an error	Required
Automatic starting upon login	Connection automatically established during control power-up	Required
Add to favorites	Connection icon in the task bar: ■ Double click with left mouse button: The control starts the connection ■ Single click with left mouse button: The control changes to the desktop of the connection ■ Single click with right mouse button: The control displays the connection menu	Required
Move to the following workspace	Number of desktop for the connection, whereby desktops 0 and 1 are reserved for the NC software	Required
Release USB mass memory	Enable access to connected USB mass memory	Required
Computer	Host name or IP address of the external computer	Required
User name	Name of the user	Required
Password	User password	Required
Windows domain	Domain of the external computer	Required
Full screen mode or **user-defined window size**	Size of the connection window	Required
Entries in the **Advanced options** area	Available only to authorized specialists	Optional

Configuring the connection – VNC

Configuring an external computer

> You do not need an additional VNC server for your external computer for connecting to VNC.
> Install and configure the VNC server, e.g. the TightVNC server, before configuring the TNC.

Configuring the TNC

Configure the TNC as follows:

- Select the **Remote Desktop Manager** menu item via the task bar
- Press the **New connection** button in the **Remote Desktop Manager** window
- Select the **VNC** menu item
- Specify the required connection information in the **Edit connection** window

Setting	Meaning	Input
Connection name	Name of the connection in the Remote Desktop Manager	Required
Restarting after end of connection	Behavior with terminated connection: ■ Always restart ■ Never restart ■ Always after an error ■ Ask after an error	Required
Automatic starting upon login	Connection automatically established during control power-up	Required
Add to favorites	Connection icon in the task bar: ■ Double click with left mouse button: The control starts the connection ■ Single click with left mouse button: The control changes to the desktop of the connection ■ Single click with right mouse button: The control displays the connection menu	Required
Move to the following workspace	Number of desktop for the connection, whereby desktops 0 and 1 are reserved for the NC software	Required
Release USB mass memory	Permit access to connected USB mass memory	Required
Computer	Host name or IP address of the external computer	Required
Password	Password for connecting to the VNC server	Required

Setting	Meaning	Input
Full screen mode or **user-defined window size**	Size of the connection window	Required
Permit further connections (share)	Enable access to the VNC server also by other VNC connections	Required
View only	The external computer cannot be operated in display mode	Required
Entries in the **Advanced options** area	Available only to authorized specialists	Optional

Starting and stopping the connection

Once a connection has been configured, it is shown as an icon in the Remote Desktop Manager window. Click the connection icon with the right mouse key to open a menu in which the display can be started and stopped.

Use the right DIADUR key on the keyboard to change to Desktop 3 and back to the TNC interface. You can also use the task bar to get to this desktop.

If the desktop of the external connection or the external computer is active, all inputs from the mouse and the keyboard are transmitted there.

All connections are canceled automatically when the HEROS 5 operating system is shut down. Please note, however, that only the connection is canceled, whereas the external computer or the external system is not shut down automatically.

2.7 SELinux security software

SELinux is an extension for Linux-based operating systems. SELinux is an additional security software package based on Mandatory Access Control (MAC) and protects the system against the running of unauthorized processes or functions and therefore protects against viruses and other malware.

MAC means that each action must be specifically permitted otherwise the TNC will not run it. The software is intended as protection in addition to the normal access restriction in Linux. Certain processes and actions can only be executed if the standard functions and access control of SELinux permit it.

> ⇨ The SELinux installation of the TNC is prepared to permit running of only those programs installed with the HEIDENHAIN NC software. Other programs cannot be run with the standard installation.

The access control of SELinux under HEROS 5 is regulated as follows:

- The TNC runs only those applications installed with the HEIDENHAIN NC software
- Files in connection with the security of the software (SELinux system files, HEROS 5 boot files, etc.) may only be changed by programs that are selected explicitly
- New files generated by other programs must never be executed
- USB data carriers cannot be deselected
- There are only two processes that are permitted to execute new files:
  - Starting a software update: A software update from HEIDENHAIN can replace or change system files
  - Starting the SELinux configuration: The configuration of SELinux is usually password-protected by your machine manufacturer; refer here to the relevant machine manual

> ⇨ HEIDENHAIN recommends activating SELinux because it provides additional protection against attacks from outside.

2.8 Accessories: HEIDENHAIN 3-D touch probes and electronic handwheels

3-D touch probes

The various HEIDENHAIN 3-D touch probes enable you to:

- Automatically align workpieces
- Quickly and precisely set datums
- Measure the workpiece during program run
- Measure and inspect tools

All of the cycle functions (touch probe cycles and machining cycles) are described in the Cycle Programming User's Manual. If you need this user's manual, please contact HEIDENHAIN if required. ID: 892905-xx

The triggering touch probes TS 220, TS 440, TS 444, TS 640 and TS 740

These touch probes are particularly effective for automatic workpiece alignment, datum setting and workpiece measurements. The TS 220 transfers the trigger signal via a cable and is also a cost-effective alternative if you have to carry out digitizing occasionally.

The TS 640 and the smaller TS 440 feature wireless infrared transmission of the triggering signals to the TNC. This makes them highly convenient for use on machines with automatic tool changers.

Principle of operation: HEIDENHAIN triggering touch probes feature a wear resisting optical switch that generates an electrical signal as soon as the stylus is deflected. The signal produced is transmitted to the control, which stores the current position of the touch probe as the actual value.

TT 140 tool touch probe for tool measurement

The TT 140 is a triggering 3-D touch probe for tool measurement and inspection. The TNC provides three cycles for this touch probe with which you can measure the tool length and radius either with the spindle rotating or stationary. The TT 140 features a particularly rugged design and a high degree of protection, which make it insensitive to coolants and swarf. The triggering signal is generated by a wear-resistant and highly reliable optical switch.

2.8 Accessories: HEIDENHAIN 3-D touch probes and electronic handwheels

HR electronic handwheels

Electronic handwheels facilitate moving the axis slides precisely by hand. A wide range of traverses per handwheel revolution is available. Apart from the HR 130 and HR 150 panel-mounted handwheels, HEIDENHAIN also offers the HR 410 portable handwheel.

3

Programming: Fundamentals, File Management

3.1 Fundamentals

Position encoders and reference marks

The machine axes are equipped with position encoders that register the positions of the machine table or tool. Linear axes are usually equipped with linear encoders, rotary tables and tilting axes with angle encoders.

When a machine axis moves, the corresponding position encoder generates an electrical signal. The TNC evaluates this signal and calculates the precise actual position of the machine axis.

If there is a power interruption, the calculated position will no longer correspond to the actual position of the machine slide. To recover this association, incremental position encoders are provided with reference marks. The scales of the position encoders contain one or more reference marks that transmit a signal to the TNC when they are crossed over. From that signal the TNC can re-establish the assignment of displayed positions to machine positions. For linear encoders with distance-coded reference marks, the machine axes need to move by no more than 20 mm, for angle encoders by no more than 20°.

With absolute encoders, an absolute position value is transmitted to the control immediately upon switch-on. In this way the assignment of the actual position to the machine slide position is re-established directly after switch-on.

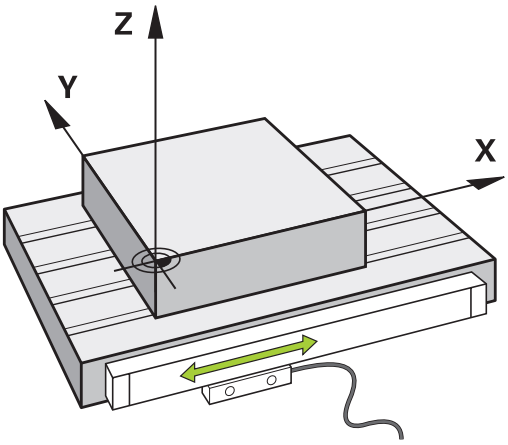

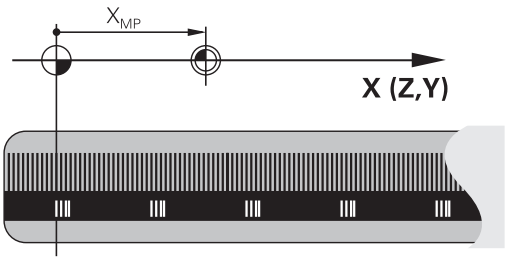

Reference system

A reference system is required to define positions in a plane or in space. The position data are always referenced to a predetermined point and are described through coordinates.

The Cartesian coordinate system (a rectangular coordinate system) is based on the three coordinate axes X, Y and Z. The axes are mutually perpendicular and intersect at one point called the datum. A coordinate identifies the distance from the datum in one of these directions. A position in a plane is thus described through two coordinates, and a position in space through three coordinates.

Coordinates that are referenced to the datum are referred to as absolute coordinates. Relative coordinates are referenced to any other known position (reference point) you define within the coordinate system. Relative coordinate values are also referred to as incremental coordinate values.

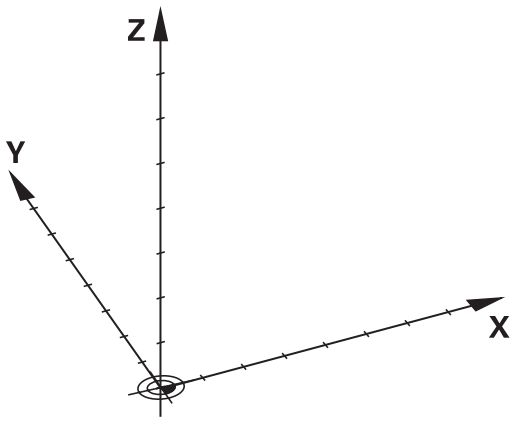

Reference system on milling machines

When using a milling machine, you orient tool movements to the Cartesian coordinate system. The illustration on the right shows how the Cartesian coordinate system describes the machine axes. The figure illustrates the right-hand rule for remembering the three axis directions: the middle finger points in the positive direction of the tool axis from the workpiece toward the tool (the Z axis), the thumb points in the positive X direction, and the index finger in the positive Y direction.

The TNC 640 can control up to 18 axes optionally. The axes U, V and W are secondary linear axes parallel to the main axes X, Y and Z, respectively. Rotary axes are designated as A, B and C. The lower right illustration shows the assignment of secondary axes and rotary axes to the principal axes.

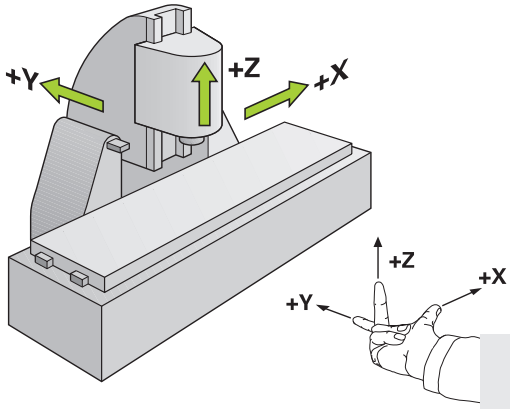

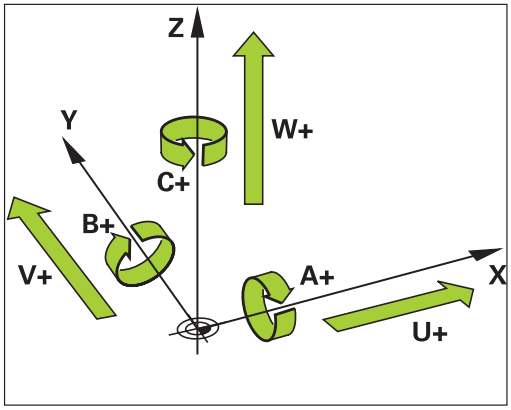

Designation of the axes on milling machines

The X, Y and Z axes on your milling machine are also referred to as tool axis, principal axis (1st axis) and secondary axis (2nd axis). The assignment of the tool axis is decisive for the assignment of the principal and secondary axes.

Tool axis	Principal axis	Secondary axis
X	Y	Z
Y	Z	X
Z	X	Y

Polar coordinates

If the production drawing is dimensioned in Cartesian coordinates, you also write the NC program using Cartesian coordinates. For parts containing circular arcs or angles it is often simpler to give the dimensions in polar coordinates.

While the Cartesian coordinates X, Y and Z are three-dimensional and can describe points in space, polar coordinates are two-dimensional and describe points in a plane. Polar coordinates have their datum at a circle center (CC), or pole. A position in a plane can be clearly defined by the:

- Polar Radius, the distance from the circle center CC to the position, and the
- Polar Angle, the value of the angle between the angle reference axis and the line that connects the circle center CC with the position.

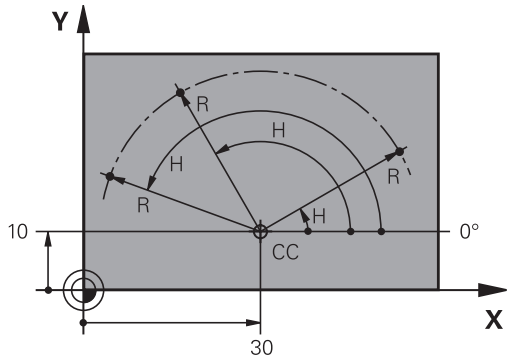

Setting the pole and the angle reference axis

The pole is set by entering two Cartesian coordinates in one of the three planes. These coordinates also set the reference axis for the polar angle H.

Coordinates of the pole (plane)	Reference axis of the angle
X/Y	+X
Y/Z	+Y
Z/X	+Z

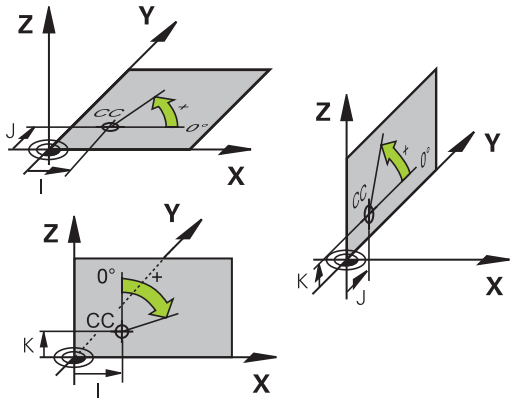

Absolute and incremental workpiece positions

Absolute workpiece positions

Absolute coordinates are position coordinates that are referenced to the datum of the coordinate system (origin). Each position on the workpiece is uniquely defined by its absolute coordinates.

Example 1: Holes dimensioned in absolute coordinates

Hole 1	Hole 2	Hole 3
X = 10 mm	X = 30 mm	X = 50 mm
Y = 10 mm	Y = 20 mm	Y = 30 mm

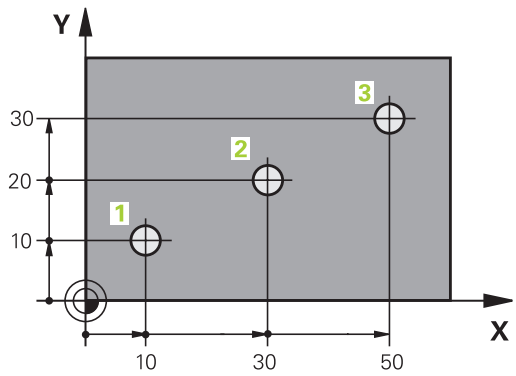

Incremental workpiece positions

Incremental coordinates are referenced to the last programmed nominal position of the tool, which serves as the relative (imaginary) datum. When you write an NC program in incremental coordinates, you thus program the tool to move by the distance between the previous and the subsequent nominal positions. This is why they are also referred to as chain dimensions.

To program a position in incremental coordinates, enter the function G91 before the axis.

Example 2: Holes dimensioned in incremental coordinates

Absolute coordinates of hole 4
X = 10 mm
Y = 10 mm

Hole 5, with respect to 4	Hole 6, with respect to 5
G91 X = 20 mm	G91 X = 20 mm
G91 Y = 10 mm	G91 Y = 10 mm

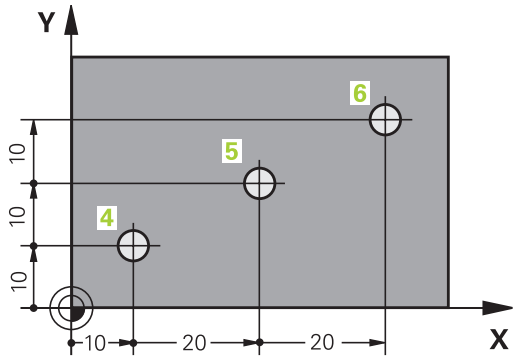

Absolute and incremental polar coordinates

Absolute polar coordinates always refer to the pole and the angle reference axis.

Incremental polar coordinates always refer to the last programmed nominal position of the tool.

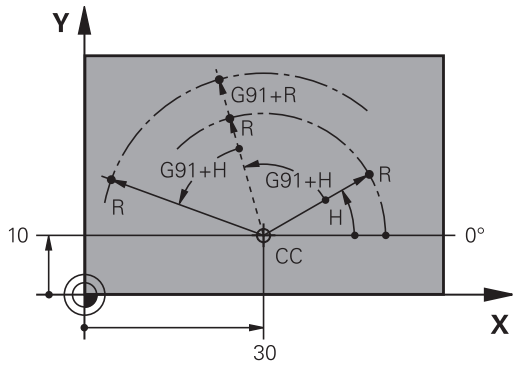

Selecting the datum

A production drawing identifies a certain form element of the workpiece, usually a corner, as the absolute datum. When setting the datum, you first align the workpiece along the machine axes, and then move the tool in each axis to a defined position relative to the workpiece. Set the display of the TNC either to zero or to a known position value for each position. This establishes the reference system for the workpiece, which will be used for the TNC display or your machining program.

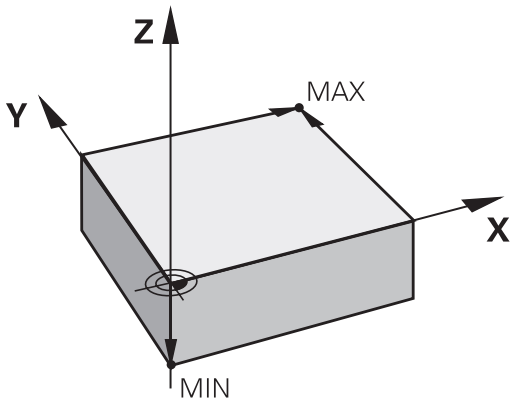

If the production drawing is dimensioned in relative datums, simply use the coordinate transformation cycles.

Further information: Cycle Programming User's Manual

If the production drawing is not dimensioned for NC, set the datum at a position or corner on the workpiece from which the dimensions of the remaining workpiece positions can be measured.

The fastest, easiest and most accurate way of setting the datum is by using a 3-D touch probe from HEIDENHAIN.

Further Information: Datum setting with a 3-D touch probe , page 538

Example

The workpiece drawing shows holes (1 to 4) whose dimensions are shown with respect to an absolute datum with the coordinates X=0 Y=0. The holes (5 to 7) refer to the relative datum with the absolute coordinates X=450 Y=750. Using the Cycle **DATUM SHIFT** you can shift the datum temporarily to X=450, Y=750 to program the holes (5 to 7) without programing any further calculations.

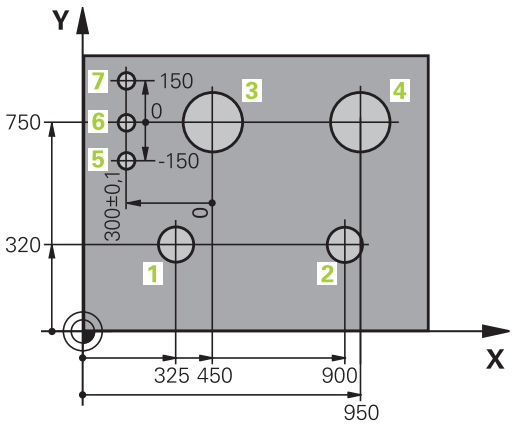

3.2 Opening programs and entering

Organization of an NC program in DIN/ISO format

A machining program consists of a series of program blocks. The illustration on the right shows the elements of a block.

The TNC numbers the blocks of a part program automatically depending on machine parameter **blockIncrement** (105409). The machine parameter **blockIncrement** (105409) defines the block number increment.

The first block of a program is identified by **%**, the program name and the active unit of measure.

The subsequent blocks contain information on:

- The workpiece blank
- Tool calls
- Approaching a safe position
- Feed rates and spindle speeds, as well as
- Path contours, cycles and other functions

The last block of a program is identified by **N99999999**, the program name and the active unit of measure.

Block

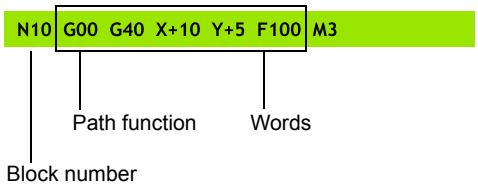

> **!** After each tool call, HEIDENHAIN recommends always traversing to a safe position from which the TNC can position the tool for machining without causing a collision!

Define the blank: G30/G31

Immediately after initiating a new program, you define an unmachined workpiece blank. If you wish to define the blank at a later stage, press the **SPEC FCT** key, the **PROGRAM DEFAULTS** soft key, and then the **BLK FORM** soft key. The TNC needs this definition for graphic simulation.

> You only need to define the workpiece blank if you wish to run a graphic test for the program!

The TNC can depict various types of blank forms.

Soft key	Function
	Define a rectangular blank
	Define a cylindrical blank
	Define a rotationally symmetric blank of any shape

Rectangular blank

The sides of the cuboid lie parallel to the X, Y and Z axes. This blank is defined by two of its corner points:

- MIN point G30: the smallest X, Y and Z coordinates of the blank form, entered as absolute values
- MAX point G31: the largest X, Y and Z coordinates of the blank form, entered as absolute or incremental values

Example: Display the BLK FORM in the NC program

%NEW G71 *	Program begin, name, unit of measure
N10 G30 G17 X+0 Y+0 Z-40 *	Spindle axis, MIN point coordinates
N20 G31 X+100 Y+100 Z+0 *	MAX point coordinates
N99999999 %NEW G71 *	Program end, name, unit of measure

Cylindrical blank

The cylindrical blank form is defined by the dimensions of the cylinder:

- Rotation axis X, Y or Z
- R: Radius of the cylinder (with positive sign)
- L: Length of the cylinder (with positive sign)
- DIST: Shifting along the rotational axis
- RI: Inside radius for a hollow cylinder

The **DIST** and **RI** parameters are optional and do not need to be programmed.

Example: Display the BLK FORM CYLINDER in the NC program

%NEW G71 *	Program begin, name, unit of measure
N10 BLK FORM CYLINDER Z R50 L105 DIST+5 RI10	Spindle axis, radius, length, distance, inside radius
N99999999 %NEW G71 *	Program end, name, unit of measure

Rotationally symmetric blank of any shape

You define the contour of the rotationally symmetric blank in a subprogram. Use X, Y or Z as the rotation axis.

In the workpiece blank definition you refer to the contour description:

- DIM_D, DIM-R: Diameter or radius of the rotationally symmetrical blank form
- LBL: Subprogram with the contour description

The contour description may contain negative values in the rotation axis but only positive values in the reference axis. The contour must be closed, i.e. the contour beginning corresponds to the contour end.

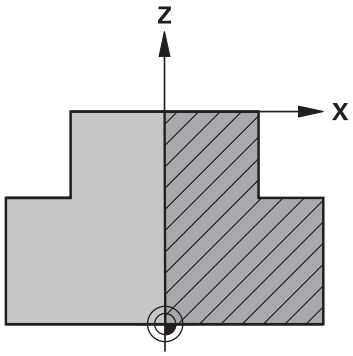

The subprogram can be designated with a number, an alphanumeric name, or a QS parameter.

Example: Display the BLK FORM ROTATION in the NC program

%NEW G71 *	Program begin, name, unit of measure
N10 BLK FORM ROTATION Z DIM_R LBL1	Spindle axis, manner of interpretation, subprogram number
N20 M30 *	End of main program
N30 G98 L1 *	Beginning of subprogram
N40 G01 X+0 Z+1 *	Starting point of contour
N50 G01 X+50 *	Programming in the positive direction of the principal axis
N60 G01 Z-20 *	
N70 G01 X+70 *	
N80 G01 Z-100 *	
N90 G01 X+0 *	
N100 G01 Z+1 *	Contour end
N110 G98 L0 *	End of subprogram
N99999999 %NEW G71 *	Program end, name, unit of measure

Opening a new part program

You always enter a machining program in **Programming** mode. An example of program initiation:

- Select the **Programming** mode

- To call the file manager, press the **PGM MGT** key.

Select the directory in which you wish to store the new program:

FILE NAME = NEW.I

- Enter the new program name and confirm your entry with the **ENT** key

- Select the unit of measure: Press the **MM** or **INCH** soft key. The TNC switches the screen layout and initiates the dialog for defining the **BLK FORM** (workpiece blank)

- Select a rectangular workpiece blank: Press the soft key for a rectangular blank form

WORKING PLANE IN GRAPHIC: XY

- Enter the spindle axis, e.g. **G17**

WORKPIECE BLANK DEF.: MINIMUM

- Enter in sequence the X, Y and Z coordinates of the MIN point and confirm each of your entries with the **ENT** key

WORKPIECE BLANK DEF.: MAXIMUM

- Enter in sequence the X, Y and Z coordinates of the MAX point and confirm each of your entries with the **ENT** key

Example: Display the BLK form in the NC program

%NEW G71 *	Program begin, name, unit of measure
N10 G30 G17 X+0 Y+0 Z-40 *	Spindle axis, MIN point coordinates
N20 G31 X+100 Y+100 Z+0 *	MAX point coordinates
N99999999 %NEW G71 *	Program end, name, unit of measure

The TNC automatically generates the first and last blocks of the program.

If you do not wish to define a blank form, cancel the dialog at **Working plane in graphic: XY** by pressing the **DEL** key.

Programming tool movements in ISO

Press the **SPEC FCT** key to program a block. Press the **PROGRAM FUNCTIONS** soft key, and then the **ISO** soft key. You can also use the gray path function keys to get the corresponding G code.

> If you enter DIN/ISO functions via a connected USB keyboard, make sure that capitalization is active.

Example of a positioning block

G
- Enter **1** and press the **ENT** key to open the block

ENT

COORDINATES ?

X
- **10** (Enter the target coordinate for the X axis)

Y
- **20** (Enter the target coordinate for the Y axis)

ENT
- Go to the next question with **ENT**

MILLINGDEFINITIONPOINTPATH

G
- Enter **40** and confirm with **ENT** to traverse without tool radius compensation, **or**

G41
G42
- Move the tool to the left or to the right of the programmed contour: Select **G41** or **G42** with the soft key

FEED RATE F=?

- **100** (Enter a feed rate of 100 mm/min for this path contour movement)

ENT
- Go to the next question with **ENT**

MISCELLANEOUS FUNCTION M ?

- Enter **3** (miscellaneous function **M3** "Spindle ON").

END
- With the **END** key, the TNC ends this dialog.

The program-block window displays the following line:

```
N30 G01 G40 X+10 Y+5 F100 M3 *
```

Actual position capture

The TNC enables you to transfer the current tool position into the program, for example during

- Positioning-block programming
- Cycle programming

To transfer the correct position values, proceed as follows:

- Place the input box at the position in the block where you want to insert a position value

- Select the actual-position-capture function: In the soft-key row the TNC displays the axes whose positions can be transferred

- Select the axis: The TNC writes the current position of the selected axis into the active input box

In the working plane the TNC always captures the coordinates of the tool center, even though tool radius compensation is active.

In the tool axis the TNC always captures the coordinates of the tool tip and thus always takes the active tool length compensation into account.

The TNC keeps the soft-key row for axis selection active until you deactivate it by pressing the actual-position-capture key again. This behavior remains in effect even if you save the current block and open a new one with a path function key. If you select a block element in which you must choose an input alternative via soft key (e.g. for radius compensation), then the TNC also closes the soft-key row for axis selection.

The actual-position-capture function is not allowed if the tilted working plane function is active.

Editing a program

> You cannot edit a program while it is being run by the TNC in a machine operating mode.

While you are creating or editing a part program, you can select any desired line in the program or individual words in a block with the arrow keys or the soft keys:

Soft key/ Keys	Function
	Change the position of the current block on the screen. Press this soft key to display additional NC blocks that are programmed before the current block
	Change the position of the current block on the screen. Press this soft key to display additional NC blocks that are programmed after the current block
↑ ↓	Move from one block to the next
→ ←	Select individual words in a block
GOTO	To select a certain block, press the **GOTO** key, enter the desired block number, and confirm with the **ENT** key. Or: Press the **GOTO** key, enter the block number step and jump up or down the number of entered lines by pressing the **N LINES** soft key

Soft key/key	Function
CE	■ Set the selected word to zero ■ Erase an incorrect number ■ Delete the (clearable) error message
NO ENT	Delete the selected word
DEL	■ Delete the selected block ■ Erase cycles and program sections
INSERT LAST NC BLOCK	Insert the block that you last edited or deleted

Inserting blocks at any desired location

- Select the block after which you want to insert a new block and initiate the dialog

Editing and inserting words

- Select a word in a block and overwrite it with the new one. The plain-language dialog is available while the word is highlighted
- To accept the change, press the **END** key

If you want to insert a word, press the horizontal arrow key (right or left) repeatedly until the desired dialog appears. You can then enter the desired value.

Looking for the same words in different blocks

- Select a word in a block: Press the arrow key repeatedly until the desired word is highlighted
- Select a block with the arrow keys
  - Arrow down: search forwards
  - Arrow up: search backwards

The word that is highlighted in the new block is the same as the one you selected previously.

If you have started a search in a very long program, the TNC shows a progress display window. You then have the option of canceling the search via soft key.

Marking, copying, cutting and inserting program sections

The TNC provides the following functions for copying program sections within an NC program or into another NC program:

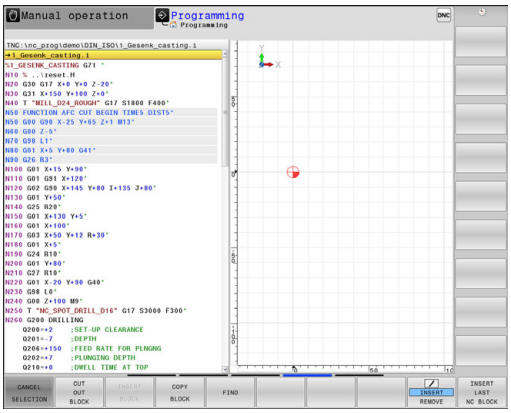

Soft key	Function
SELECT BLOCK	Switch the marking function on
CANCEL SELECTION	Switch the marking function off
CUT OUT BLOCK	Cut the marked block
INSERT BLOCK	Insert the block that is stored in the buffer memory
COPY BLOCK	Copy the marked block

To copy a program section, proceed as follows:

- Select the soft key row containing the marking functions
- Select the first block of the section you wish to copy
- Mark the first block: Press the **SELECT BLOCK** soft key. The TNC highlights the block in color and displays the **CANCEL SELECTION** soft key
- Move the cursor to the last block of the program section you wish to copy or cut. The TNC shows the marked blocks in a different color. You can end the marking function at any time by pressing the **CANCEL SELECTION** soft key
- Copy the selected program section: Press the **COPY BLOCK** soft key. Cut the selected program section: Press the **CUT OUT BLOCK** soft key. The TNC stores the selected block
- Using the arrow keys, select the block after which you wish to insert the copied (cut) program section

> To insert the section into another program, select the corresponding program using the file manager and then mark the block after which you wish to insert the program section.

- Insert the saved program section: Press the **INSERT BLOCK** soft key
- To end the marking function, press the **CANCEL SELECTION** soft key

The TNC search function

The search function of the TNC enables you to search for any text within a program and replace it with a new text, if required.

Finding any text

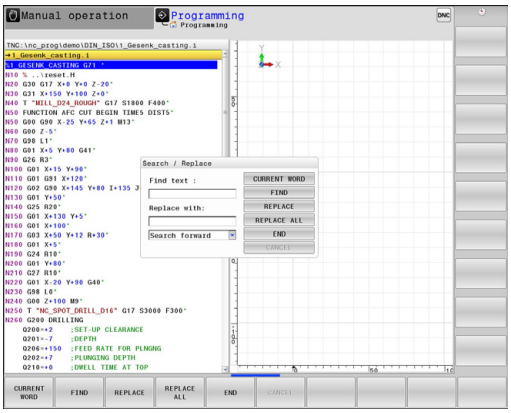

FIND

- Select the Search function: The TNC superimposes the search window and displays the available search functions in the soft-key row
- Enter the text to be searched for, e.g.: **TOOL**
- Select forwards search or backwards search

FIND

- Start the search process: The TNC moves to the next block containing the text you are searching for

FIND

- Repeat the search process: The TNC moves to the next block containing the text you are searching for

END

- End the search function

Searching and replacing any text

> The search and replace function is not possible if
> - a program is protected
> - the program is currently being run by the TNC
>
> When using the **REPLACE ALL** function, ensure that you do not accidentally replace text that you do not want to change. Once replaced, such text cannot be restored.

- Select the block containing the word you wish to find

FIND

- Select the Search function: The TNC superimposes the search window and displays the available search functions in the soft-key row
- Press the **CURRENT WORD** soft key: The TNC loads the first word of the current block. If required, press the info key again to load the desired word

FIND

- Start the search process: The TNC moves to the next occurrence of the text you are searching for

REPLACE

- To replace the text and then move to the next occurrence of the text, press the **REPLACE** soft key. To replace all text occurrences, press the **REPLACE ALL** soft key. To skip the text and move to its next occurrence press the **FIND** soft key

END

- End the search function

3.3 File management: Basics

Files

Files in the TNC	Type
Programs	
in HEIDENHAIN format	.H
in DIN/ISO format	.I
Compatible Programs	
HEIDENHAIN Unit Programs	.HU
HEIDENHAIN Contour Programs	.HC
Tables for	
Tools	.T
Tool changers	.TCH
Datums	.D
Points	.PNT
Presets	.PR
Touch probes	.TP
Backup files	.BAK
Dependent files (e.g. structure items)	.DEP
Freely definable tables	.TAB
Pallets	.P
Turning tools	.TRN
Text as	
ASCII files	.A
Log files	.TXT
Help files	.CHM
CAD files as	
ASCII files	.DXF
	.IGES
	.STEP

When you write a part program on the TNC, you must first enter a program name. The TNC saves the program to the internal memory as a file with the same name. The TNC can also save texts and tables as files.

The TNC provides a special file management window in which you can easily find and manage your files. Here you can call, copy, rename and erase files.

You can manage an almost unlimited number of files with the TNC. The available memory is at least **21 GB**. A single NC program can be up to **2 GB** in size.

Depending on the setting, the TNC generates a backup file (*.bak) after editing and saving of NC programs. This can reduce the memory space available to you.

File names

When you store programs, tables and texts as files, the TNC adds an extension to the file name, separated by a point. This extension indicates the file type.

File name	File type
PROG20	.I

File names should not exceed 24 characters, otherwise the TNC cannot display the entire file name.

File names on the TNC must comply with this standard: The Open Group Base Specifications Issue 6 IEEE Std 1003.1, 2004 Edition (Posix-Standard). Accordingly, the file names may include the characters below:

A B C D E F G H I J K L M N O P Q R S T U V W X Y Z a b c d e f g h i j k l m n o p q r s t u v w x y z 0 1 2 3 4 5 6 7 8 9 . _ -

You should not use any other characters in file names in order to prevent any file transfer problems. Table names must start with a letter.

The maximum limit for the path and file name together is 255 characters.

Further Information: Paths, page 119

Displaying externally generated files on the TNC

The TNC features several additional tools which you can use to display the files shown in the table below. Some of the files can also be edited.

File types	Type
PDF files	pdf
Excel tables	xls csv
Internet files	html
Text files	txt ini
Graphics files	bmp gif jpg png

Further Information: Additional tools for management of external file types, page 131

Data backup

We recommend saving newly written programs and files on a PC at regular intervals.

The TNCremo data transmission freeware from HEIDENHAIN is a simple and convenient method for backing up data stored on the TNC.

You additionally need a data medium on which all machine-specific data, such as the PLC program, machine parameters, etc., are stored. Ask your machine manufacturer for assistance, if necessary.

Saving the contents of the internal memory can take up to several hours. In this case, it is a good idea to save the data outside of work hours, e.g. during the night.

Take the time occasionally to delete any unneeded files so that the TNC always has enough memory space for system files (such as the tool table).

Depending on operating conditions (e.g. vibration load), hard disks generally have a higher failure rate after three to five years of service. HEIDENHAIN therefore recommends having the hard disk inspected after three to five years.

3.4 Working with the file manager

Directories

To ensure that you can easily find your programs and files, we recommend that you organize your internal memory into directories. You can divide a directory into further directories, which are called subdirectories. With the **-/+** key or **ENT** you can show or hide the subdirectories.

Paths

A path indicates the drive and all directories and subdirectories under which a file is saved. The individual names are separated by a backslash "\".

> The path, including all drive characters, directory and the file name, including the extension, must not exceed 255 characters.

Example

The directory AUFTR1 was created on the TNC drive. Then, in the AUFTR1 directory, the directory NCPROG was created and the part program PROG1.H was copied into it. The part program now has the following path:

TNC:\AUFTR1\NCPROG\PROG1.I

The chart at right illustrates an example of a directory display with different paths.

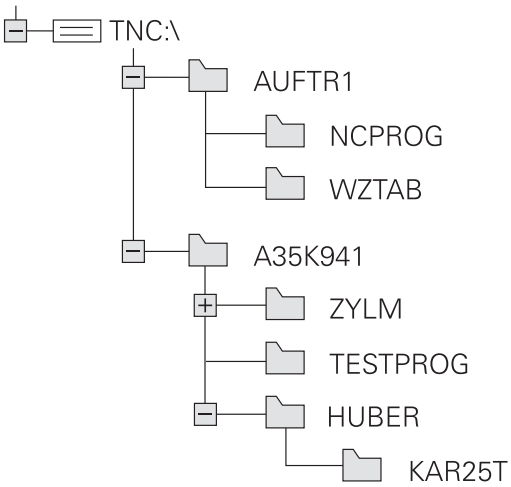

Overview: Functions of the file manager

Soft key	Function	Page
COPY	Copy a single file	124
SELECT TYPE	Display a specific file type	122
NEW FILE	Create new file	124
LAST FILES	Display the last 10 files that were selected	127
DELETE	Delete a file	128
TAG	Tag a file	129
RENAME	Rename file	129
PROTECT	Protect a file against editing and erasure	130
UNPROTECT	Cancel file protection	130
IMPORT TABLE	Import tool table of an iTNC 530	183
ADAPT THE TABLE FORMAT	Customize table view	416
NET	Manage network drives	141
SELECT EDITOR	Select the editor	130
SORT	Sort files by properties	130
COPY DIR	Copy a directory	127
DELETE ALL	Delete directory with all its subdirectories	
UPDATE TREE	Refresh directory	
RENAME	Rename a directory	
NEW DIRECTORY	Create a new directory	

Calling the file manager

PGM MGT

- Press the **PGM MGT** key: The TNC displays the file management window (see figure for default setting. If the TNC displays a different screen layout, press the **WINDOW** soft key.)

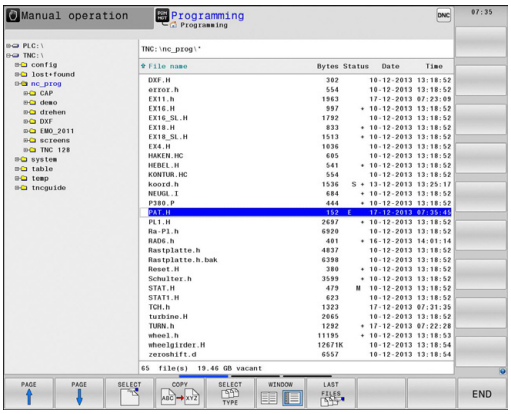

The narrow window on the left shows the available drives and directories. Drives designate devices with which data are stored or transferred. One drive is the internal memory of the TNC. Other drives are the interfaces (RS232, Ethernet), which can be used, for example, to connecting a PC. A directory is always identified by a folder symbol to the left and the directory name to the right. Subdirectories are shown to the right of and below their parent directories. If there are subdirectories, you can show or hide them using the **-/+** key.

The wide window on the right shows you all files that are stored in the selected directory. Each file is shown with additional information, illustrated in the table below.

Display	Meaning
File name	File name (max. 25 characters) and file type
Byte	File size in bytes
Status	File properties:
E	Program is selected in the Programming mode of operation
S	Program is selected in the Test Run mode of operation
M	Program is selected in a Program Run mode of operation
+	Program has dependent files with the DEP extension that are not displayed, e.g. with use of the tool usage test
	File is protected against erasing and editing
	File is protected against erasing and editing, because it is being run
Date	Date that the file was last edited
Time	Time that the file was last edited

To show the dependent files you set the machine parameter **dependentFiles** (no. 122101) to **MANUAL**.

Selecting drives, directories and files

PGM MGT

- Calling the File Manager

Use the arrow keys or the soft keys to move the cursor to the desired position on the screen:

- Moves the cursor from the left to the right window, and vice versa

- Moves the cursor up and down within a window

PAGE

PAGE

- Moves the cursor one page up or down within a window

Step 1: Select drive

- Move the highlight to the desired drive in the left window

SELECT

- To select a drive, press the **SELECT** soft key; or

ENT

- Press the **ENT** key

Step 2: Select a directory

- Move the highlight to the desired directory in the left-hand window—the right-hand window automatically shows all files stored in the highlighted directory

Step 3: Select a file

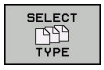

- Press the **SELECT TYPE** soft key

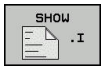

- Press the soft key for the desired file type, or

- Press the **SHOW ALL** soft key to display all files; or

- Use wildcards, e.g. **4*.h**: show all files type .h starting with a 4

- Move the highlight to the desired file in the right window

- Press the **SELECT** soft key; or

- Press the **ENT** key

The TNC opens the selected file in the operating mode from which you called the file manager.

> If you enter the first letter of the file you are looking for in file management, the cursor automatically jumps to the first program with the same letter.

Creating a new directory

- Move the highlight in the left window to the directory in which you want to create a subdirectory

- Press the **NEW DIRECTORY** soft key
- Enter a directory name

- Press the **ENT** key

- Press the **OK** soft key to confirm; or

- Abort with the **CANCEL** soft key

Creating a new file

- Select the directory in the left window in which you wish to create the new file
- Position the cursor in the right window

- Press the **NEW FILE** soft key
- Enter the file name with extension

- Press the **ENT** key

Copying a single file

- Move the cursor to the file you wish to copy

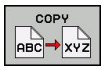

- Press the **COPY** soft key to select the copy function. The TNC opens a pop-up window

Copying files into the current directory

- Enter the name of the destination file.

- Confirm your entry with the **ENT** key or **OK** soft key: The TNC copies the file into the current directory. The original file is retained.

Copying files into another directory

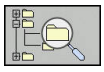

- Press the **TARGET DIRECTORY** soft key to select the target directory from a pop-up window

- Accept using the **ENT** key or **OK** soft key: The TNC copies the file with the same name into the chosen directory. The original file is retained.

> When you start the copying process with **ENT** or the **OK** soft key, the TNC displays a pop-up window with a progress indicator.

Copying files into another directory

- Select a screen layout with two equally sized windows

In the right window

- Press the **SHOW TREE** soft key
- Move the cursor to the directory into which you wish to copy the files, and display the files in this directory with the **ENT** key

In the left window

- Press the **SHOW TREE** soft key
- Select the directory with the files to copy and press the **SHOW FILES** to display them

- Call the file tagging functions

- Move the cursor to the file you would like to copy and highlight it; if you wish, highlight other files in the same way

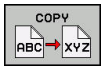

- Copy the tagged files into the target directory

Further Information: Tagging files, page 129

If you have tagged files in both the left and right windows, the TNC copies from the directory in which the cursor is located.

Overwriting files

If you copy files into a directory in which other files are stored under the same name, the TNC will ask whether the files in the target directory should be overwritten:

- To overwrite all files (**Existing files** field selected), press the **OK** soft key; or
- To leave the files as they are, press the **CANCEL** soft key

If you want to overwrite a protected file, select the **Protected files** field or cancel the process.

Copying a table

Importing lines to a table

If you are copying a table into an existing table, you can overwrite individual lines with the **REPLACE FIELDS** soft key. Prerequisites:

- The target table must exist
- The file to be copied must only contain the lines you want to replace
- Both tables must have the same file extension

> **!** The **REPLACE FIELDS** function is used to overwrite lines in the target table. To avoid losing data, create a backup copy of the original table.

Example

With a tool presetter you have measured the length and radius of ten new tools. The tool presetter then generates the TOOL_Import.T tool table with 10 lines (for the 10 tools).

- Copy this table from the external data medium to any directory
- Copy the externally created table to the existing table TOOL.T using the TNC file manager. The TNC asks if you wish to overwrite the existing TOOL.T tool table:
- If you press the **YES** soft key, the TNC will completely overwrite the current TOOL.T tool table. After the copying process the new TOOL.T table consists of 10 lines.
- Or press the **REPLACE FIELDS** soft key for the TNC to overwrite the 10 lines in the TOOL.T file. The data of the other lines is not changed.

Extracting lines from a table

You can select one or more lines in a table and save them in a separate table.

- Open the table from which you want to copy lines
- Use the arrow keys to select the first line to be copied
- Press the **MORE FUNCTIONS** soft key
- Press the **TAG** soft key
- Select additional lines, if required
- Press the **SAVE AS** soft key
- Enter a name for the table in which the selected lines are to be saved

Copying a directory

- Move the highlight in the right window onto the directory you want to copy
- Press the **COPY** soft key: the TNC opens the window for selecting the target directory
- Select the target directory and confirm with **ENT** or the **OK** soft key: The TNC copies the selected directory and all its subdirectories to the selected target directory

Choosing one of the last files selected

PGM MGT

- Calling the File Manager

LAST FILES

- To display the last ten files selected: press the **LAST FILES** soft key

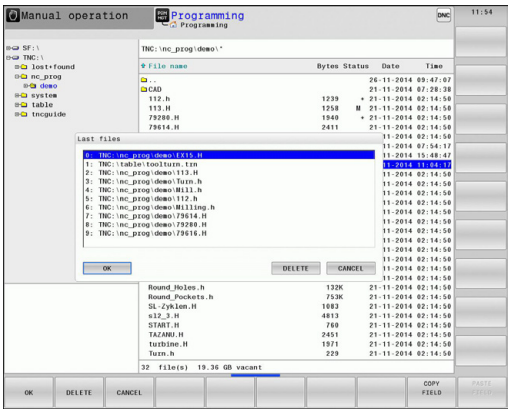

Use the arrow keys to move the cursor to the file you wish to select:

↑ ↑

- Moves the cursor up and down within a window

OK

- To select the file, press the **OK** soft key; or

ENT

- Press the **ENT** key

> The **COPY FIELD** soft key allows you to copy the path of a marked file. You can reuse the copied path later, e.g. for a program call using the **PGM CALL** key.

Deleting a file

Caution: Data may be lost!
Once you delete files they cannot be restored!

- Move the cursor to the file you want to delete

- To select the erasing function, press the **DELETE** soft key. The TNC asks whether you want to delete the file
- To confirm the deletion, press the **OK** soft key; or
- To cancel deletion, press the **CANCEL** soft key

Deleting a directory

Caution: Data may be lost!
Once you delete files they cannot be restored!

- Move the cursor to the directory you want to delete

- To select the erasing function, press the **DELETE** soft key. The TNC inquires whether you really intend to delete the directory and all its subdirectories and files
- To confirm the deletion, press the **OK** soft key; or
- To cancel deletion, press the **CANCEL** soft key

Tagging files

Soft key	Tagging function
TAG FILE	Tag a single file
TAG ALL FILES	Tag all files in the directory
UNTAG FILE	Untag a single file
UNTAG ALL FILES	Untag all files
COPY TAG	Copy all tagged files

Some functions, such as copying or erasing files, can not only be used for individual files, but also for several files at once. To tag several files, proceed as follows:

- Move the cursor to the first file

- To display the tagging functions, press the **TAG** soft key

- Tag a file by pressing the **TAG FILE** soft key

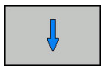

- Move the cursor to other files

- To tag further files, press the **TAG FILE** soft key, etc.

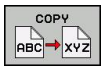

- Copy the tagged files: Press the **COPY** soft key; or

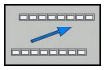

- Delete highlighted files: leave active soft key row
- Press the **DELETE** soft key to delete highlighted files

Renaming a file

- Move the cursor to the file you wish to rename

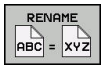

- Select the renaming function
- Enter the new file name; the file type cannot be changed
- To rename: Press the **OK** soft key or the **ENT** key

Sorting files

- Select the folder in which you wish to sort the files

- Select the **SORT** soft key
- Select the soft key with the corresponding display criterion

Additional functions

Protecting a file / Canceling file protection

- Move the cursor to the file you want to protect

- Select the miscellaneous functions: press the **MORE FUNCTIONS** soft key

- Enable file protection: Press the **PROTECT** soft key. The file is tagged with the "protected" symbol

- To cancel file protection, press the **UNPROTECT** soft key

Selecting the editor

- Move the cursor in the right-hand window onto the file you want to open

- Select the miscellaneous functions: press the **MORE FUNCTIONS** soft key

- To select the editor with which to open the selected file, press the **SELECT EDITOR** soft key
- Mark the desired editor
- Press the **OK** soft key to open the file

Connecting/removing a USB device

- Move the cursor to the left-hand window

- Select the miscellaneous functions: press the **MORE FUNCTIONS** soft key
- Shift the soft-key row

- Search for a USB device
- To remove the USB device, move the cursor to the USB device in the directory tree

- Remove the USB device

Further Information: USB devices on the TNC, page 142

Additional tools for management of external file types

The additional tools enable you to display or edit various externally created file types on the TNC.

File types	Description
PDF files (pdf)	page 132
Excel spreadsheets (xls, csv)	page 133
Internet files (htm, html)	page 134
ZIP archives (zip)	page 135
Text files (ASCII files, e.g. txt, ini)	page 136
Video files	page 136
Graphics files (bmp, jpg, gif, png)	page 137

If you transfer files from a PC to the control by means of TNCremo, you must have entered the file name extension pdf, xls, zip, bmp gif, jpg and png in the list of the file types for binary transmission (menu item **Extras >Configuration >Mode** in TNCremo).

Displaying PDF files

To open PDF files directly on the TNC, proceed as follows:

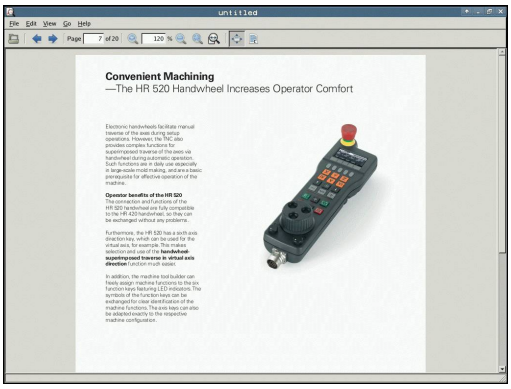

PGM MGT

- Calling the File Manager
- Select the directory in which the PDF file is saved
- Move the cursor to the PDF file

ENT

- Press **ENT**: The TNC opens the PDF file in its own application using the additional **PDF viewer** tool

> With the key combination ALT+TAB you can always return to the TNC user interface while leaving the PDF file open. Alternatively, you can also click the corresponding symbol in the task bar to switch back to the TNC interface.

> If you position the mouse pointer over a button, a brief tooltip explaining the function of this button will be displayed. More information on how to use the **PDF viewer** is provided under **Help**.

Proceed as follows to exit the **PDF viewer**:

- Use the mouse to select the **File** menu item
- Select the menu item **Close**: The TNC returns to the file manager

If you are not using a mouse, proceed as follows to close the **PDF viewer**:

▷

- Press the key for switching the soft keys: The **PDF viewer** opens the **File** pull-down menu

↓

- Select the **Close** menu item and confirm with the **ENT** key: The TNC returns to the file manager

ENT

Displaying and editing Excel files

Proceed as follows to open and edit Excel files with the extension **xls**, **xlsx** or **csv** directly on the TNC:

PGM MGT
- Calling the File Manager
- Select the directory in which the Excel file is saved
- Move the cursor to the Excel file

ENT
- Press **ENT**: The TNC opens the Excel file in its own application using the additional **Gnumeric** tool

> With the key combination ALT+TAB you can always return to the TNC user interface while leaving the Excel file open. Alternatively, you can also click the corresponding symbol in the task bar to switch back to the TNC interface.

> If you position the mouse pointer over a button, a brief tooltip explaining the function of this button will be displayed. More information on how to use the **Gnumeric** function is provided under **Help**.

Proceed as follows to exit **Gnumeric**:

- Use the mouse to select the **File** menu item
- Select the menu item **Close**: The TNC returns to the file manager

If you are not using a mouse, proceed as follows to close the additional **Gnumeric** tool:

▷
- Press the key for switching the soft keys: The additional **Gnumeric** tool opens the **File** pull-down menu

↓
- Select the **Close** menu item and confirm with the **ENT** key: The TNC returns to the file manager

ENT

Displaying Internet files

To open Internet files with the extension **htm** or **html** directly on the TNC, proceed as follows:

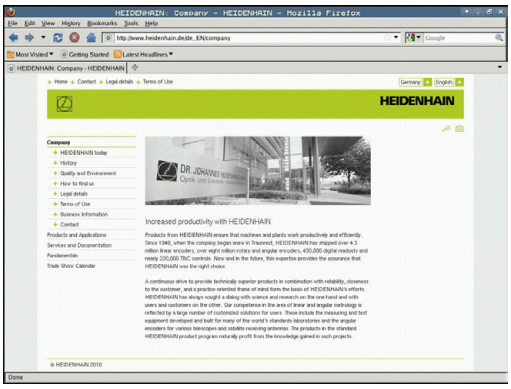

PGM MGT

- Calling the File Manager
- Select the directory in which the Internet file is saved
- Move the cursor to the Internet file

ENT

- Press **ENT**: The TNC opens the Internet file in its own application using the additional **Web Browser** tool

> With the key combination ALT+TAB you can always return to the TNC user interface while leaving the PDF file open. Alternatively, you can also click the corresponding symbol in the task bar to switch back to the TNC interface.

> If you position the mouse pointer over a button, a brief tool tip explaining the function of this button will be displayed. More information on how to use **Web Browser** is available in **Help**.

Proceed as follows to exit the **Web Browser**:

- Use the mouse to select the **File** menu item
- Select the menu item **Quit**: The TNC returns to the file manager

If you are not using a mouse, proceed as follows to close the **Web Browser**:

▷

- Press the key for switching the soft keys: The **Web Browser** opens the **File** pull-down menu

↓

- Select the **Quit** menu item and confirm with the **ENT** key: The TNC returns to the file manager

ENT

Working with ZIP archives

Proceed as follows to open ZIP archives with the extension **zip** directly on the TNC:

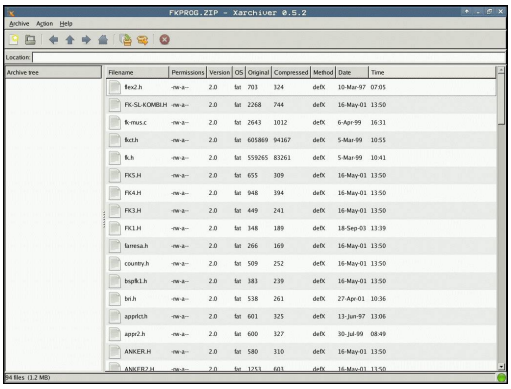

PGM MGT

- Calling the File Manager
- Select the directory in which the archive file is saved
- Move the cursor to the archive file

ENT

- Press **ENT**: The TNC opens the archive file in its own application using the additional **Xarchiver** tool

> With the key combination ALT+TAB you can always return to the TNC user interface while leaving the archive file open. Alternatively, you can also click the corresponding symbol in the task bar to switch back to the TNC interface.

> If you position the mouse pointer over a button, a brief tooltip explaining the function of this button will be displayed. More information on how to use the **Xarchiver** function is provided under **Help**.

> **!** Please note that the TNC does not carry out any binary-to-ASCII conversion or vice versa when compressing or decompressing NC programs and NC tables. When such files are transferred to TNC controls using other software versions, the TNC may not be able to read them.

Proceed as follows to exit **Xarchiver**:

- Use the mouse to select the **Archive** menu item
- Select the menu item **Quit**: The TNC returns to the file manager

If you are not using a mouse, proceed as follows to close the **Xarchiver**:

▷

- Press the key for switching the soft keys: The **Xarchiver** opens the **Archive** pull-down menu

↓

- Select the **Quit** menu item and confirm with the **ENT** key: The TNC returns to the file manager

ENT

Displaying and editing text files

Use the internal text editor to open and edit text files (ASCII files, e.g. with the extension **txt**). Proceed as follows:

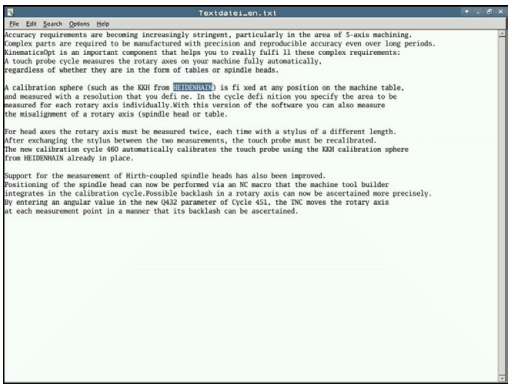

PGM MGT
- Calling the File Manager
- Select the drive and the directory in which the text file is saved
- Move the cursor to the text file

ENT
- Press the **ENT** key: The TNC opens the text file with the internal text editor

> Alternatively, you can also open the ASCII files using the additional **Leafpad** tool. The shortcuts you are familiar with from Windows, which you can use to edit texts quickly (CTRL+C, CTRL+V,...), are available within **Leafpad**.

> With the key combination ALT+TAB you can always return to the TNC user interface while leaving the text file open. Alternatively, you can also click the corresponding symbol in the task bar to switch back to the TNC interface.

Proceed as follows to open **Leafpad**:
- Use the mouse to select the **Menu** HEIDENHAIN icon from the task bar
- Select the **Tools** and **Leafpad** menu items in the pull-down menu

Proceed as follows to exit **Leafpad**:
- Use the mouse to select the **File** menu item
- Select the menu item **Quit**: The TNC returns to the file manager

Displaying video files

> This feature must be enabled and adapted by the machine tool builder.
> Refer to your machine manual.

Proceed as follows to open video files directly on the TNC:

PGM MGT
- Call the File Manager
- Select the directory in which the video file is saved
- Move the cursor to the video file

ENT
- Press **ENT**: The TNC opens the video file in its own application

Displaying graphic files

Proceed as follows to open graphics files with the extension bmp, gif, jpg or png directly on the TNC:

PGM MGT

- Call the File Manager
- Select the directory in which the graphics file is saved
- Move the cursor to the graphics file

ENT

- Press the **ENT** key The TNC opens the graphics file in its own application using the additional **ristretto** tool

> With the key combination ALT+TAB you can always return to the TNC user interface while leaving the graphics file open. Alternatively, you can also click the corresponding symbol in the task bar to switch back to the TNC interface.

> More information on how to use the **ristretto** function is provided under **Help**.

Proceed as follows to exit **ristretto**:

- Use the mouse to select the **File** menu item
- Select the menu item **Quit**: The TNC returns to the file manager

If you are not using a mouse, proceed as follows to close the additional **ristretto** tool:

▷

- Press the key for switching the soft keys: The **ristretto** additional tool opens the **File** pull-down menu

↓

- Select the **Quit** menu item and confirm with the **ENT** key: The TNC returns to the file manager

ENT

Additional tools for ITCs

The following additional tools allow you to apply various settings for the touch screens on connected ITCs.

ITCs are industrial PCs without their own memory media, and therefore they do not have their own operating system. This feature is what makes ITCs different from IPCs.

ITCs are frequently used with large machinery, e.g. as a clone of the actual control system.

The machine manufacturer defines and configures the display and function of the connected ITCs and IPCs.

Additional tool	Application
ITC Calibration	4-point calibration
ITC Gestures	Configuration of gesture control
ITC touchscreen configuration	Selection of touch sensitivity

The control only displays the additional tools for the ITCs in the task where ITCs are connected.

ITC Calibration

Using the tool **ITC Calibration,** you align the position for the mouse cursor displayed with the actual movement position of your finger.

Calibration using the additional **ITC Calibration** tool is recommended in the following cases:

- After replacing the touchscreen
- When changing the touch screen position (parallel axis error due to amended viewing angle)

Calibration involves the following steps:

- ▶ Start the tool in control using the task bar
- > The ITC opens the calibration screen with four touch points in the corners of the screen
- ▶ Touch the four touch points shown one after the other
- > The ITC closes the calibration screen once calibration has been successfully completed

ITC Gestures

Using the additional **ITC Gestures** tool, the machine manufacturer configures the gesture control on the touch screen.

This function may only be used with the permission of your machine manufacturer.

ITC touchscreen configuration

Using the additional **ITC Touchscreen Configuration** tool, you can select the touch sensitivity of the touch screen.

The ITC gives you the following options:

- **Normal Sensitivity (Cfg 0)**
- **High Sensitivity (Cfg 1)**
- **Low Sensitivity (Cfg 2)**

Use the **Normal Sensitivity (Cfg 0)** setting as standard. If you find it difficult to operate the equipment while wearing gloves in this setting, select the **High Sensitivity (Cfg 1)** setting.

> ⇨ If the ITC touch screen is not splash-proof, select the **Low Sensitivity (Cfg 2)** setting. This stops the ITC interpreting drops of water as touches.

Calibration involves the following steps:

- ▶ Start the tool in control using the task bar
- > The ITC opens a pop-up window with three options
- ▶ Select Touch Sensitivity
- ▶ Press the **OK** button
- > The ITC closes the pop-up window

Data transfer to or from an external data carrier

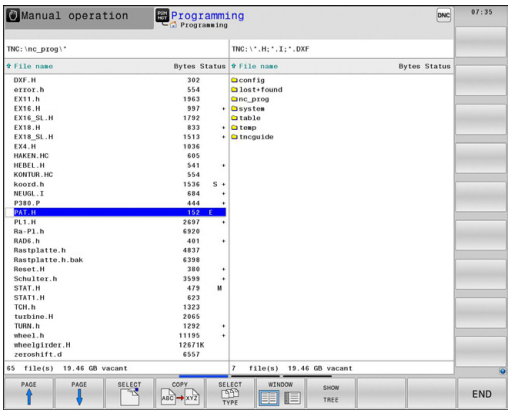

Before you can transfer data to an external data medium, you must set up the data interface.

Further Information: Setting up data interfaces, page 609

Depending on the data transfer software you use, problems can occur occasionally when you transmit data over a serial interface. They can be overcome by repeating the transmission.

PGM MGT

- Call the File Manager

WINDOW

- Select the screen layout for data transfer: press the **WINDOW** soft key.

Use the arrow keys to move the cursor to the file you wish to transfer:

- Moves the cursor up and down within a window

- Moves the cursor from the right to the left window, and vice versa

If you wish to copy from the TNC to the external data medium, move the cursor in the left window to the file to be transferred.

If you wish to copy from the external data medium to the TNC, move the cursor in the right window to the file to be transferred.

SHOW TREE

- Select another drive or directory: Press the **SHOW TREE** soft key
- Use the arrow keys to select the desired directory

SHOW FILES

- Select the desired file: Press the **SHOW FILES** soft key

COPY

- Use the arrow keys to select the file
- Transfer a single file: Press the **COPY** soft key

- Confirm with the **OK** soft key or with the **ENT** key. A status window appears on the TNC, informing about the copying progress, or

WINDOW

- Stop transfer: Press the **WINDOW** soft key. The TNC displays the standard file manager window again

The TNC in a network

You must connect the Ethernet card to the network.

Further Information: Ethernet interface , page 615

The TNC logs error messages during network operation.

Further Information: Ethernet interface , page 615

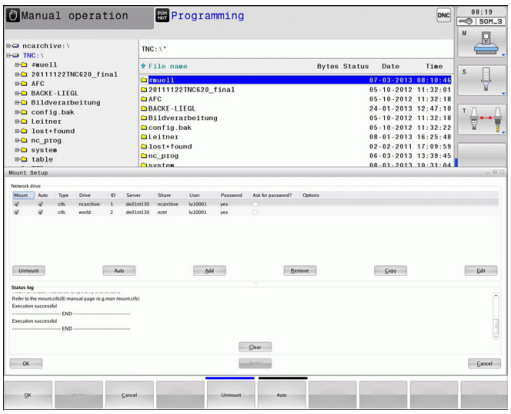

If the TNC is connected to a network, the left directory window displays additional drives. All the functions described above (selecting a drive, copying files, etc.) also apply to network drives, provided that you have been granted the corresponding rights.

Connecting and disconnecting a network drive

PGM MGT

- To call the file manager, press the **PGM MGT** key

NET

- To select the network settings: Press the **NET** soft key (second soft key row)
- Network drive management: Press the **DEFINE NETWORK CONNECTN.** soft key. In a window the TNC shows the network drives available for access. With the soft keys described below you can define the connection for each drive.

Soft key	Function
Connect	Establish the network connection. If the connection is active, the TNC marks the **Mount** column.
Separate	End network connection
Auto	Automatically establish network connection whenever the TNC is switched on. The TNC marks the **Auto** column if the connection is established automatically
Add	Set up new network connection
Remove	Delete existing network connection
Copy	Copy network connection
Edit	Edit network connection
Clear	Delete the status window

USB devices on the TNC

Caution: Data may be lost!
Only use the USB interface for transferring and saving, not for processing or running programs.

Backing up data from or loading onto the TNC is especially easy with USB devices. The TNC supports the following USB block devices:

- Floppy disk drives with FAT/VFAT file system
- Memory sticks with the FAT/VFAT file system
- Hard disks with the FAT/VFAT file system
- CD-ROM drives with the Joliet (ISO 9660) file system

The TNC automatically detects these types of USB devices when connected. The TNC does not support USB devices with other file systems (such as NTFS). The TNC displays the **USB: TNC does not support device** error message when such a device is connected.

If an error message is displayed when connecting a USB data medium, check the setting in the SELinux security software.

Further Information: SELinux security software, page 96

The TNC also displays the **USB: TNC does not support device** error message if you connect a USB hub. In this case, simply acknowledge the message with the **CE** key.

In theory, you should be able to connect all USB devices with the file systems mentioned above to the TNC. It may happen that a USB device is not identified correctly by the control. In such cases, use another USB device.

The USB devices appear as separate drives in the directory tree, so you can use the file management functions described in the earlier chapters accordingly.

Your machine manufacturer can assign permanent names for USB devices. The machine manual provides further information.

Remove the USB device

Proceed as follows to remove a USB device:

- To call the file manager, press the **PGM MGT** key
- Select the left window with the arrow key
- Use the arrow keys to select the USB device to be removed
- Scroll through the soft-key row
- Select additional functions
- Scroll through the soft-key row
- Select the function for removing USB devices. The TNC removes the USB device from the directory tree and reports **The USB device can be removed now**.
- Remove the USB device
- Quit the File Manager

In order to re-establish a connection with a USB device that has been removed, press the following soft key:

- Select the function for reconnection of USB devices

4

Programming: Programming Aids

4.1 Adding comments

Application

You can add comments to a part program to explain program steps or make general notes.

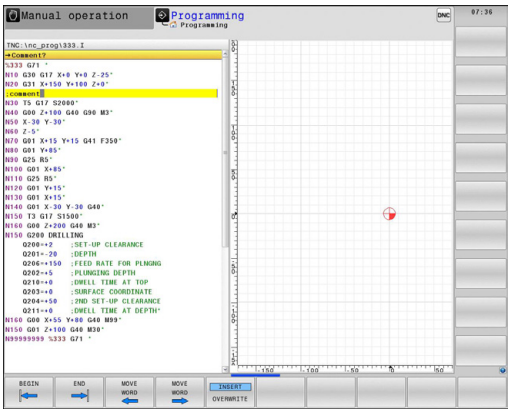

Depending on the **lineBreak** (no. 105404) machine parameter, the TNC displays comments that can no longer be completely displayed on the screen on several lines, or the **>>** character appears on the screen.

The last character in a comment block must not have any tilde (**~**).

You have the following possibilities for adding comments.

Entering comments during programming

- Enter the data for a program block, then press the semicolon key ";" on the alphabetic keyboard—the TNC displays the dialog prompt **COMMENT?**
- Enter your comment and conclude the block by pressing the **END** key

Inserting comments after program entry

- Select the block to which a comment is to be added
- Select the last word in the block with the right arrow key, then press the semicolon key (**;**): The TNC displays the dialog prompt **COMMENT?**
- Enter your comment and conclude the block by pressing the **END** key

Entering a comment in a separate block

- Select the block after which the comment is to be inserted
- Initiate the programming dialog with the semicolon key (**;**) on the alphabetic keyboard
- Enter your comment and conclude the block by pressing the **END** key

Functions for editing of the comment

Soft key	Function
BEGIN	Jump to beginning of comment
END	Jump to end of comment
MOVE WORD	Jump to the beginning of a word. Words must be separated by a space
MOVE WORD	Jump to the end of a word. Words must be separated by a space
INSERT OVERWRITE	Switch between paste and overwrite mode

4.2 Display of NC programs

Syntax highlighting

The TNC displays syntax elements with various colors according to their meaning. Programs are made more legible and clear with color-highlighting.

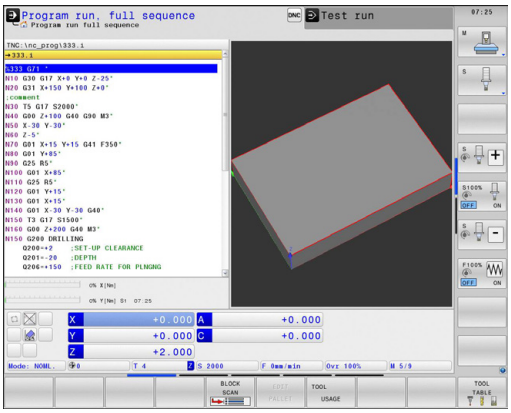

Color highlighting of syntax elements

Use	Color
Standard color	Black
Display of comments	Green
Display of numerical values	Blue
Block number	Purple

Scrollbar

You can move the screen content with the mouse via the scrollbar on the right edge of the program window. In addition, the size and position of the scrollbar indicates program length and cursor position.

4.3 Structuring programs

Definition and applications

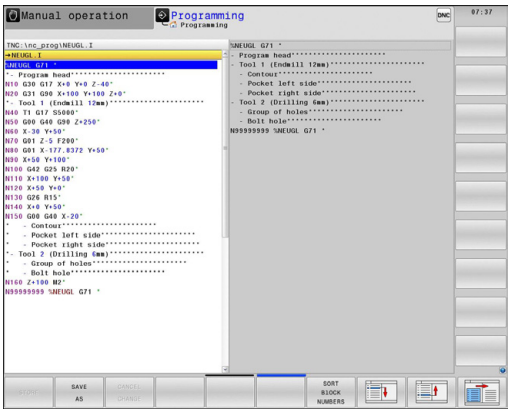

This TNC function enables you to comment part programs in structuring blocks. Structuring blocks are short texts with up to 252 characters and are used as comments or headlines for the subsequent program lines.

With the aid of appropriate structuring blocks, you can organize long and complex programs in a clear and comprehensible manner.

This function is particularly convenient if you want to change the program later. Structuring blocks can be inserted into the part program at any point.

Structure blocks can also be displayed in a separate window, and be edited or added to, as desired. Use the appropriate screen layout for this.

The inserted structure items are managed by the TNC in a separate file (extension: .SEC.DEP). This speeds navigation in the program structure window.

Displaying the program structure window / Changing the active window

PROGRAM + SECTS

- Display the program structure window: Select the **PGM + SECTS** screen display

- Switch the active window: Press the **CHANGE WINDOW** soft key

Inserting a structure block in the program window

- Select the block after which the structuring block is to be inserted

SPEC FCT

- Press the **SPEC FCT** key

PROGRAM-MING AIDS

- Press the **PROGRAMMING AIDS** soft key

INSERT SECTION

- Press the **INSERT SECTION** soft key
- Enter the structuring text
- If necessary, change the structure depth with the soft key

> You can also insert structure blocks with the key combination **Shift + 8**.

Selecting blocks in the program structure window

If you are scrolling through the program structure window block by block, the TNC at the same time automatically moves the corresponding NC blocks in the program window. This way you can quickly skip large program sections.

4.4 Calculator

Operation

The TNC features an integrated calculator with the basic mathematical functions.

- Use the **CALC** key to show and hide the on-line calculator
- Select the arithmetical functions: The calculator is operated with short commands via soft key or through the alphabetic keyboard.

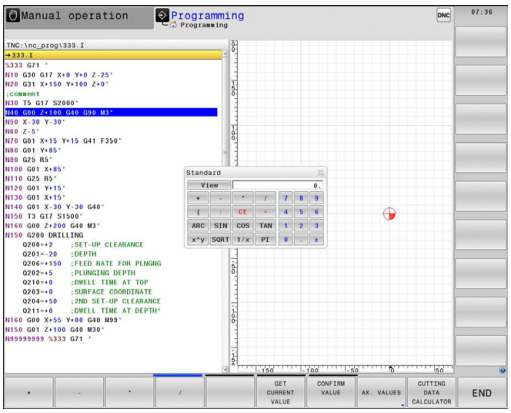

Calculate function	Shortcut (soft key)
Addition	+
Subtraction	–
Multiplication	*
Division	/
Calculations in parentheses	( )
Arc cosine	ARC
Sine	SIN
Cosine	COS
Tangent	TAN
Powers of values	X^Y
Square root	SQRT
Inversion	1/x
pi (3.14159265359)	PI
Add value to buffer memory	M+
Save the value to buffer memory	MS
Recall from buffer memory	MR
Delete buffer memory contents	MC
Natural logarithm	LN
Logarithm	LOG
Exponential function	e^x
Check the algebraic sign	SGN
Form the absolute value	ABS

Calculate function	Shortcut (soft key)
Truncate decimal places	INT
Truncate integers	FRAC
Modulus operator	MOD
Select view	View
Delete value	CE
Unit of measure	MM or INCH
Show angle values in radians (standard: angle in degrees)	RAD
Select the display mode of the numerical value	DEC (decimal) or HEX (hexadecimal)

Transferring the calculated value into the program

- Use the arrow keys to select the word into which the calculated value is to be transferred
- Superimpose the on-line calculator by pressing the **CALC** key and perform the desired calculation
- Press the "Actual-position capture" key or the **CONFIRM VALUE** soft key for the TNC to transfer the value into the active input box and closes the calculator

You can also transfer values from a program into the calculator. When you press the **GET CURRENT VALUE** soft key or the **GOTO** key, the TNC transfers the value from the active input field to the calculator.

The calculator remains active even after a change in operating modes. Press the **END** soft key to close the calculator.

Functions in the pocket calculator

Soft key	Function
AX. VALUES	Load the nominal or reference value of the respective axis position into the calculator
GET CURRENT VALUE	Load the numerical value from the active input field into the calculator
CONFIRM VALUE	Load the numerical value from the calculator field into the active input field
COPY FIELD	Copy the numerical value from the calculator
PASTE FIELD	Insert the copied numerical value into the calculator
CUTTING DATA CALCULATOR	Open the cutting data calculator

You can also shift the calculator with the arrow keys on your keyboard. If you have connected a mouse you can also position the calculator with this.

4.5 Cutting data calculator

Application

With the cutting data calculator you can calculate the spindle speed and the feed rate for a machining process. Then you can load the calculated values into an opened feed rate or spindle speed dialog box in the NC program.

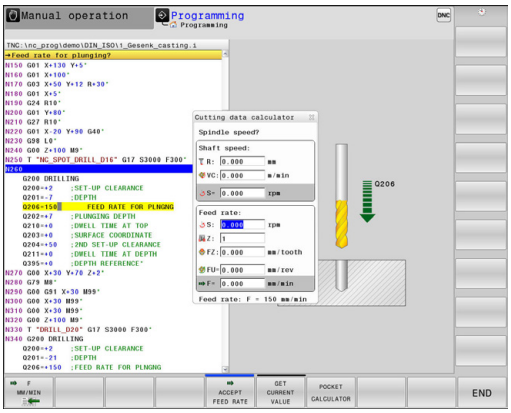

> You cannot perform any cutting data calculation in turning mode with the cutting data calculator because the feed rate and spindle speed data are different in turning mode from milling mode. During turning, feed rates are usually defined in mm per revolution (mm/1) (**M136**), but the cutting data calculator always calculates in mm per minute (mm/min). In addition, the radius in the cutting data calculator relates to the tool, but turning operations require the tool diameter.

To open the cutting data calculator, press the **CUTTING DATA CALCULATOR** soft key. The TNC shows the soft key if you

- open the calculator (**CALC** key)
- open the dialog field for spindle speed input in the T block
- open the dialog field for feed rate input in positioning blocks or cycles
- enter a feed rate in manual operation (**F** soft key)
- enter a spindle speed in Manual Operation (**S** soft key)

The cutting data calculator is displayed with different input fields depending on whether you calculate a spindle speed or a feed rate:

Window or spindle speed calculation:

Code letter	Meaning
R:	Tool radius (mm)
VC:	Cutting speed (m/min)
S=	Result for spindle speed (rev/min)

Window for feed rate calculation:

Code letter	Meaning
S:	Spindle speed (rpm)
Z:	Number of teeth on the tool (n)
FZ:	Feed per tooth (mm/tooth)
FU:	Feed rate per revolution (mm/1)
F=	Result for feed rate (mm/min)

You can also calculate the feed rate in the T block and automatically transfer it to the subsequent positioning blocks and cycles. For entering feed rates in positioning blocks or cycles, select the **F AUTO** soft key. The TNC then uses the feed rate defined in the T block. If you have to change the feed rate later, you only need to adjust the feed rate value in the T block.

Functions in the cutting data calculator:

Soft key	Function
S U/MIN	Load the spindle speed from the cutting data calculator form into an open dialog field.
F MM/MIN	Load the feed rate from the cutting data calculator form into an open dialog field.
VC M/MIN	Load the cutting speed from the cutting data calculator form into an open dialog field.
FZ MM/ZAHN	Load the feed per tooth from the cutting data calculator form into an open dialog field.
FU MM/U	Load the feed per revolution from the cutting data calculator form into an open dialog field.
ACCEPT TOOL RADIUS	Load the tool radius into the cutting data calculator form
CONFIRM RPM	Load the spindle speed from the open dialog field into the cutting data calculator form
ACCEPT FEED RATE	Load the feed rate from the open dialog field into the cutting data calculator form

Soft key	Function
ACCEPT FEED RATE	Load the feed per revolution from the open dialog field into the cutting data calculator form
ACCEPT FEED RATE	Load the feed per tooth from the open dialog field into the cutting data calculator form
GET CURRENT VALUE	Load the value from an open dialog field into the cutting data calculator form
POCKET CALCULATOR	Switch to the pocket calculator
↓	Move the cutting data calculator in the direction of the arrow
INCH	Use inch values in the cutting data calculator
END	Close the cutting data calculator

4.6 Programming graphics

Generate/do not generate graphics during programming

While you are writing the part program, you can have the TNC generate a 2-D pencil-trace graphic of the programmed contour.

- Switch the screen layout to displaying program blocks to the left and graphics to the right: Press the screen layout key and the **PROGRAM + GRAPHICS** soft key

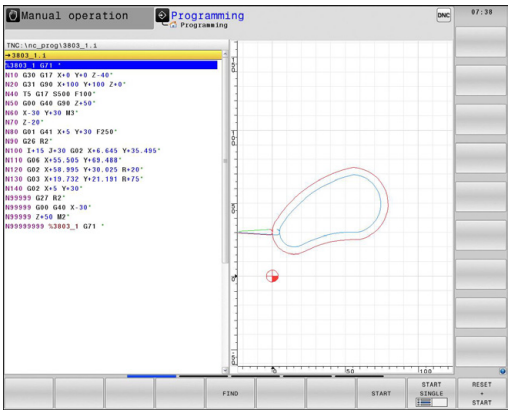

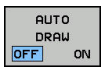

- Set the **AUTO DRAW** soft key to **ON**. While you are entering the program lines, the TNC generates each programmed path contour in the graphics window in the right screen half

If you do not wish to have graphics generated during programming, set the **AUTO DRAW** soft key to **OFF**.

If **AUTO DRAW** is set to **ON**, during generation of the 2-D line graphic the control does not consider:

- Program section repeats
- Jump commands
- M functions, such as M2 or M30
- Cycle calls

Only use automatic drawing during contour programming.

Generating a graphic for an existing program

- Use the arrow keys to select the block up to which you want the graphic to be generated, or press **GOTO** and enter the desired block number

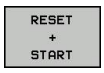

- To generate graphics, press the **RESET + START** soft key

Additional functions:

Soft key	Function
RESET + START	Generate a complete graphic
START SINGLE	Generate programming graphic blockwise
START	Generate a complete graphic or complete it after **RESET + START**
STOP	Stop the programming graphics. This soft key only appears while the TNC is generating the programming graphics
	Select plan view
	Select front view
	Select side view

Block number display ON/OFF

- Shift the soft-key row

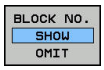

- To show block numbers: Set the **BLOCK NO. SHOW OMIT** soft key to **SHOW**
- Hide block numbers: Set the **BLOCK NO. SHOW OMIT** soft key to **OMIT**

Erasing the graphic

- Shift the soft-key row

- Erase graphic: Press **CLEAR GRAPHICS** soft key

Showing grid lines

- Shift the soft-key row

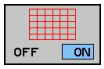

- Show grid lines: Press the **SHOW GRID LINES** soft key

Magnification or reduction of details

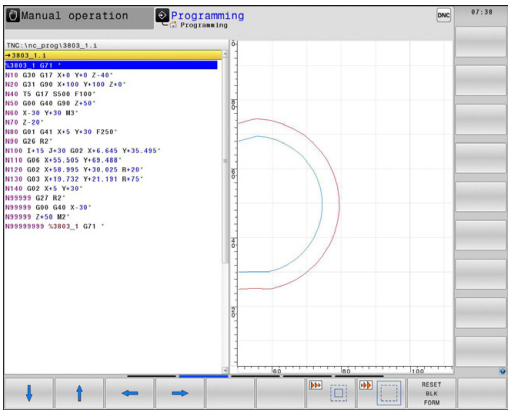

You can select the graphics display

- Shift the soft-key row

The following functions are available:

Soft key	Function
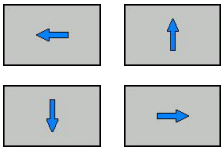	Press the desired soft key to move the frame overlay
	Press the soft key to reduce the detail
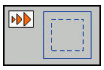	Press the soft key to enlarge the detail

The **RESET WORKPIECE BLANK** soft key is used to restore the original section.

You can also use the mouse to change the graphic display. The following functions are available:

- To shift the model shown: Hold the center mouse button or mouse wheel down and move the mouse. If you simultaneously press the shift key, you can only shift the model horizontally or vertically
- To zoom in on a certain area: Mark a zoom area by holding the left mouse button down. After you release the left mouse button, the TNC zooms in on the defined area
- To rapidly magnify or reduce any area: Rotate the mouse wheel backwards or forwards

4.7 Error messages

Display of errors

The TNC generates error messages when it detects problems such as:

- Incorrect data input
- Logical errors in the program
- Contour elements that are impossible to machine
- Incorrect use of touch probes

When an error occurs, it is displayed in red type in the header. Long and multi-line error messages are displayed in abbreviated form. Complete information on all pending errors is shown in the error window.

If a rare "processor check error" should occur, the TNC automatically opens the error window. You cannot remove such an error. Shut down the system and restart the TNC.

The error message is displayed in the header until it is cleared or replaced by a higher-priority error.

An error message that contains a program block number was caused by an error in the indicated block or in the preceding block.

Open the error window

ERR

- Press the **ERR** key. The TNC opens the error window and displays all accumulated error messages in full

Closing the error window

END

- Press the **END** soft key; or

ERR

- Press the **ERR** key. The TNC closes the error window.

Detailed error messages

The TNC displays possible causes of the error and suggestions for solving the problem:

- Open the error window

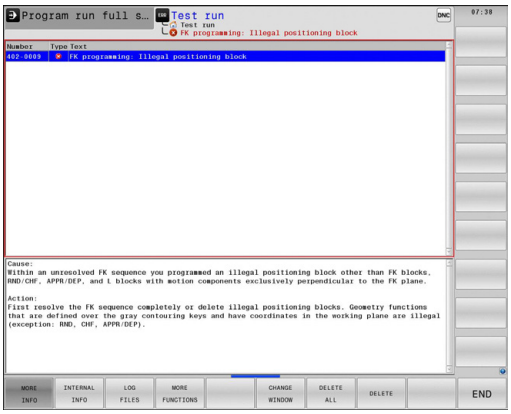

- Information on the error cause and corrective action: Position the cursor on the error message and press the **MORE INFO** soft key. The TNC opens a window with information on the error cause and corrective action.
- Leave Info: Press the **MORE INFO** soft key again

Soft key: INTERNAL INFO

The **INTERNAL INFO** soft key supplies information on the error message. This information is only required if servicing is needed.

- Open the error window

- Detailed information about the error message: Position the cursor on the error message and press the **INTERNAL INFO** soft key. The TNC opens a window with internal information about the error
- To exit Details, press the **INTERNAL INFO** soft key again

Clearing errors

Clearing errors outside of the error window

CE

- Clear the errors/messages in the header: Press the **CE** key

> In some situations, the **CE** key cannot be used to clear the errors, since the key is reserved for other functions.

Deleting errors

- Open the error window

DELETE

- Clear individual errors: Position the cursor on the error message and press the **DELETE** soft key.

DELETE ALL

- Delete all error messages: Press the **DELETE ALL** soft key.

> If the cause of the error has not been removed, the error message cannot be deleted. In this case, the error message remains in the window.

Error log

The TNC stores errors and important events (e.g. system startup) in an error log. The capacity of the error log is limited. If the log is full, the TNC uses a second file. If this is also full, the first error log is deleted and written to again, and so on. To view the error history, switch between **CURRENT FILE** and **PREVIOUS FILE**.

- Open the error window.

LOG FILES

- Press the **LOG FILES** soft key.

ERROR LOG

- Open the error log file: Press the **ERROR LOG** soft key.

PREVIOUS FILE

- If you need the previous log file: Press the **PREVIOUS FILE** soft key.

CURRENT FILE

- If you need the current log file: Press the **CURRENT FILE** soft key.

The oldest entry is at the beginning of the log file, and the most recent entry is at the end.

Keystroke log

The TNC stores keystrokes and important events (e.g. system startup) in a keystroke log. The capacity of the keystroke log is limited. If the keystroke log is full, the control switches to a second keystroke log. If this second file becomes full, the first keystroke log is cleared and written to again, and so on. To view the keystroke history, switch between **CURRENT FILE** and **PREVIOUS FILE**.

- Press the **LOG FILES** soft key

- Open the keystroke log file: Press the **KEYSTROKE LOG** soft key

- If you need the previous log file: Press the **PREVIOUS FILE** soft key

- If you need the current log file: Press the **CURRENT FILE** soft key

The TNC saves each key pressed during operation in a keystroke log. The oldest entry is at the beginning, and the most recent entry is at the end of the file.

Overview of the keys and soft keys for viewing the logs

Soft key/ Keys	Function
BEGIN	Go to beginning of keystroke log
END	Go to end of keystroke log
FIND	Find text
CURRENT FILE	Current keystroke log
PREVIOUS FILE	Previous keystroke log
↑ ↓	Up/down one line
	Return to main menu

Informational texts

After a faulty operation, such as pressing a key without function or entering a value outside of the valid range, the TNC displays a (green) text in the header, informing you that the operation was not correct. The TNC clears this informational text upon the next valid input.

Save service files

If necessary, you can save the "Current status of the TNC," and make it available to a service technician for evaluation. A group of service files is saved (error and keystroke logs, as well as other files that contain information about the current status of the machine and the machining operation).

If you repeat the **Save service files** function with the same file name, the previously saved group of service data files is overwritten. To avoid this, use another file name when you repeat the function.

Saving service files

- Open the error window.

- Press the **LOG FILES** soft key

- Press the **SAVE SERVICE FILES** soft key: The TNC opens a pop-up window in which you can enter a file name or a complete path for the service file

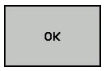

- Save the service files: Press the **OK** soft key

Calling the TNCguide help system

You can call the TNC's help system via soft key. Immediately the help system shows you the same error explanation that you receive by pressing the **HELP** soft key.

If your machine manufacturer also provides a help system, the TNC shows an additional **MACHINE MANUFACTURER** soft key with which you can call this separate help system. There you will find further, more detailed information on the error message concerned.

- Call the help for HEIDENHAIN error messages

- Call the help for HEIDENHAIN machine-specific error messages, if available

4.8 TNCguide context-sensitive help system

Application

Before you can use the TNCguide, you need to download the help files from the HEIDENHAIN home page.

Further Information: Downloading current help files, page 169

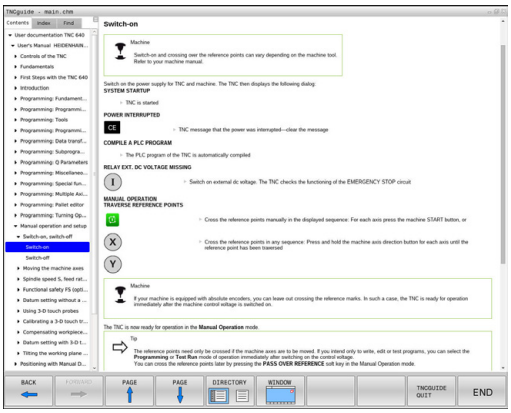

The **TNCguide** context-sensitive help system contains the user documentation in HTML format. The TNCguide is called with the **HELP** key, and the TNC sometimes immediately displays the information specific to the situation from which the help was called (context-sensitive call). Even if you are editing an NC block and press the **HELP** key, you are usually brought to the exact place in the documentation that describes the corresponding function.

The TNC always tries to start the TNCguide in the language that you have selected as the conversational language on your TNC. If the files with this language are not yet available on your TNC, it automatically opens the English version.

The following user documentation is available in TNCguide:

- Conversational Programming User's Manual (**BHBKlartext.chm**)
- ISO User's Manual (**BHBIso.chm**)
- Cycle Programming User's Manual (**BHBtchprobe.chm**)
- List of All Error Messages **(errors.chm)**

In addition, the **main.chm** "book" file is available, with the contents of all existing .chm files.

As an option, your machine tool builder can embed machine-specific documentation in the **TNCguide**. These documents then appear as a separate book in the **main.chm** file.

Working with TNCguide

Call TNCguide

There are several ways to start the TNCguide:

- Press the **HELP** key if the TNC is not already showing an error message
- First click on the help symbol in the lower right-hand corner of the screen, then click the appropriate soft key
- Use the file manager to open a help file (.chm file). The TNC can open any .chm file, even if it is not saved on the TNC's internal memory

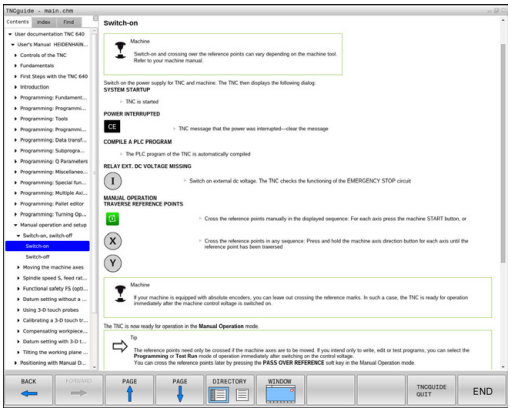

> If one or more error messages are waiting for your attention, the TNC shows the help directly associated with the error messages. To start the **TNCguide,** you first have to acknowledge all error messages.
>
> When the help system is called on the programming station, the TNC starts the internally defined standard browser.

For many soft keys there is a context-sensitive call through which you can go directly to the description of the soft key's function. This functionality requires using a mouse. Proceed as follows:

- Select the soft-key row containing the desired soft key
- Click with the mouse on the help symbol that the TNC displays just above the soft-key row: The mouse pointer turns into a question mark
- Move the question mark to the soft key for which you want an explanation, and click: The TNC opens TNCguide. If there is no entry point for the selected soft key, then the TNC opens the book file **main.chm**. You can search for the desired explanation using full text search or by using the navigation

Even if you are editing an NC block, context-sensitive help is available:

- Select any NC block
- Select the desired word
- Press the **HELP** button: The TNC opens the Help system and shows the description of the active function. This does not apply to miscellaneous functions or cycles from your machine manufacturer

Navigating in the TNCguide

It's easiest to use the mouse to navigate in TNCguide. A table of contents appears on the left side of the screen. Clicking on the rightward pointing triangle opens subordinate sections, and clicking on the respective entry opens the corresponding page. It is operated in the same manner as the Windows Explorer.

Linked text positions (cross references) are shown underlined and in blue. Clicking the link opens the associated page.

Of course you can also operate TNCguide through keys and soft keys. The following table contains an overview of the corresponding key functions.

Soft key	Function
↑ ↓	■ If the table of contents on the left is active: Select the entry above it or below it ■ If the text window on the right is active: Move the page downwards or upwards if texts or graphics are not displayed fully
→	■ If the table of contents on the left is active: Open up the table of contents ■ If the text window on the right is active: No function
←	■ If the table of contents on the left is active: Close the table of contents ■ If the text window on the right is active: No function
ENT	■ If the table of contents on the left is active: Use the cursor key to show the selected page ■ If the text window on the right is active: If the cursor is on a link, jump to the linked page
	■ If the table of contents on the left is active: Switch the tab between the display of the table of contents, display of the subject index, and the full-text search function and switching to the right-hand half of the screen ■ If the text window on the right is active: Jump back to the window on the left
	■ If the table of contents on the left is active: Select the entry above it or below it ■ If the text window on the right is active: Jump to next link
BACK ←	Select the page last shown
FORWARD →	Page forward if you have used the "Select page last shown" function
PAGE ↑	Move up by one page

Soft key	Function
PAGE	Move down by one page
DIRECTORY	Display or hide table of contents
WINDOW	Switch between full-screen display and reduced display. With the reduced display you can see some of the rest of the TNC window
SWITCH	The focus is switched internally to the TNC application so that you can operate the control when the TNCguide is open. If the full screen is active, the TNC reduces the window size automatically before the change of focus
END	Exit TNCguide

Subject index

The most important subjects in the manual are listed in the subject index (**Index** tab). You can select them directly by clicking on them with the mouse or by using the arrow keys.

The left side is active.

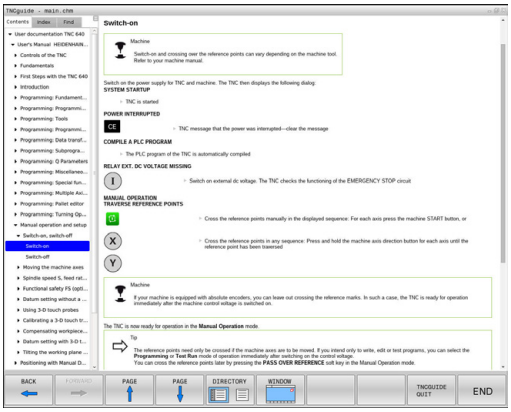

- Select the **Index** tab
- Activate the **Keyword** entry field
- Enter the search word and the TNC synchronizes the subject index and creates a list in which you can find the subject more easily; or
- Use the arrow key to highlight the desired keyword
- Use the **ENT** key to call the information on the selected keyword

Full-text search

In the **Find** tab you can search the entire TNCguide for a specific word.

The left side is active.

- Select the **Find** tab
- Activate the **Find:** entry field
- Enter the search word and confirm with the **ENT** key: The TNC lists all sources containing the word
- Use the arrow key to highlight the desired source
- Press the **ENT** key to go to the selected source

> The full-text search only works for single words.
>
> If you activate the **Search only in titles** function (by mouse or by selecting it and then pressing the space key), the TNC searches only through headings and ignores the body text.

Downloading current help files

You'll find the help files for your TNC software on the HEIDENHAIN homepage **www.heidenhain.de** under:

- Documentation and information
- User documentation
- TNCguide
- Select the desired language
- TNC Controls
- Series, e.g. TNC 600
- Desired NC software number, e.g.TNC 640 (34059x-06)
- Select the desired language version from the **TNCguide online help** table
- Download the ZIP file and unpack it
- Move the unzipped CHM files to the TNC in the **TNC:tncguideen** directory or to the respective language subdirectory

> ⇨ If you want to use TNCremo to transfer the .chm files to the TNC, then in the **Extras** >**Configuration** >**Mode** >**Transfer in binary format** menu item you have to enter the extension **.CHM**.

Language	TNC directory
German	**TNC:tncguidede**
English	**TNC:tncguideen**
Czech	**TNC:tncguidecs**
French	**TNC:tncguidefr**
Italian	**TNC:tncguideit**
Spanish	**TNC:tncguidees**
Portuguese	**TNC:tncguidept**
Swedish	**TNC:tncguidesv**
Danish	**TNC:tncguideda**
Finnish	**TNC:tncguidefi**
Dutch	**TNC:tncguidenl**
Polish	**TNC:tncguidepl**
Hungarian	**TNC:tncguidehu**
Russian	**TNC:tncguideru**
Chinese (simplified)	**TNC:tncguidezh**
Chinese (traditional)	**TNC:tncguidezh-tw**
Slovenian	**TNC:tncguidesl**
Norwegian	**TNC:tncguideno**
Slovak	**TNC:tncguidesk**
Korean	**TNC:tncguidekr**
Turkish	**TNC:tncguidetr**
Romanian	**TNC:tncguidero**

5

Programming: Tools

5.1 Entering tool-related data

Feed rate F

The feed rate **F** is the speed at which the tool center point moves. The maximum feed rates can be different for the individual axes and are set in machine parameters.

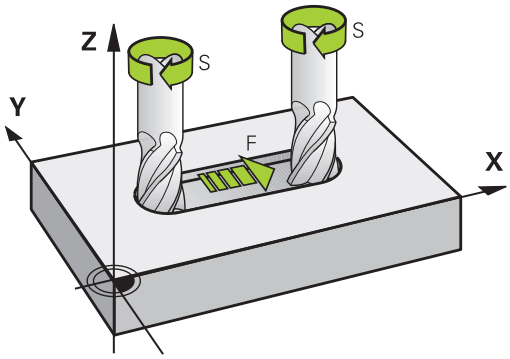

Input

You can enter the feed rate in the **T** block and in every positioning block.

Further Information: Programming tool movements in ISO, page 110

You enter the feed rate **F** in mm/min in millimeter programs, and in 1/10 inch/min in inch-programs, for resolution reasons.

Rapid traverse

If you wish to program rapid traverse, enter **G00.**

> To move your machine at rapid traverse, you can also program the corresponding numerical value, e.g. **G01 F30000**. Unlike **G00**, this rapid traverse remains in effect not only in the individual block but in all blocks until you program a new feed rate.

Duration of effect

A feed rate entered as a numerical value remains in effect until a block with a different feed rate is reached. **G00** is only effective in the block in which it is programmed. After the block with **G00** is executed, the feed rate will return to the last feed rate entered as a numerical value.

Changing during program run

You can adjust the feed rate during the program run with the feed rate potentiometer F.

The feed rate potentiometer lowers the programmed feed rate, not the feed rate calculated by the control.

Spindle speed S

The spindle speed S is entered in revolutions per minute (rpm) in a **T** block (tool call). Instead, you can also define the cutting speed Vc in meters per minute (m/min).

Programmed change

In the part program, you can change the spindle speed in a **T** block by entering the new spindle speed only:

S

- To program the spindle speed, press the **S** key on the alphabetic keyboard.
- Enter the new spindle speed

Changing during program run

You can adjust the spindle speed during program run with the spindle speed potentiometer S.

5.2 Tool data

Requirements for tool compensation

You usually program the coordinates of path contours as they are dimensioned in the workpiece drawing. To allow the TNC to calculate the tool center path i.e. the tool compensation you must also enter the length and radius of each tool you are using.

Tool data can be entered either directly in the part program with **G99** or separately in a tool table. In a tool table, you can also enter additional data for the specific tool. The TNC will consider all the data entered for the tool when executing the part program.

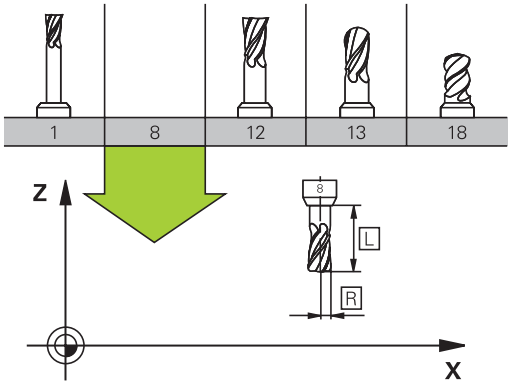

Tool number, tool name

Each tool is identified by a number between 0 and 32767. If you are working with tool tables, you can also enter a tool name for each tool. Tool names can have up to 32 characters.

> Permitted special characters: # $ % & , - . 0 1 2 3 4 5 6 7 8 9 @ A B C D E F G H I J K L M N O P Q R S T U V W X Y Z _
>
> Impermissible characters: <blank space> " ' ( ) * + : ; < = > ? [/] ^ ` a b c d e f g h l j k l m n o p q r s t u v w x y z { | } ~

The tool number 0 is automatically defined as the zero tool with the length L=0 and the radius R=0. In tool tables, tool T0 should also be defined with L=0 and R=0.

Tool length L

You should always enter the tool length L as an absolute value based on the tool reference point. The entire tool length is essential for the TNC in order to perform numerous functions involving multi-axis machining.

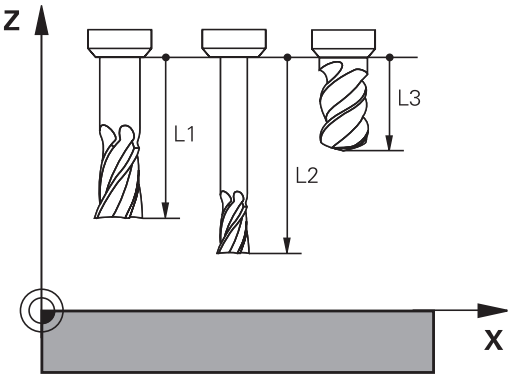

Tool radius R

You can enter the tool radius R directly.

Delta values for lengths and radii

Delta values are offsets in the length and radius of a tool.

A positive delta value describes a tool oversize (**DL**, **DR**, **DR2**>0). If you are programming the machining data with an allowance, enter the oversize value in the **T** block of the part program.

A negative delta value describes a tool undersize (**DL**, **DR**, **DR2**<0). An undersize is entered in the tool table for wear.

Delta values are usually entered as numerical values. In a **T** block, you can also assign the values to Q parameters.

Input range: You can enter a delta value with up to ± 99.999 mm.

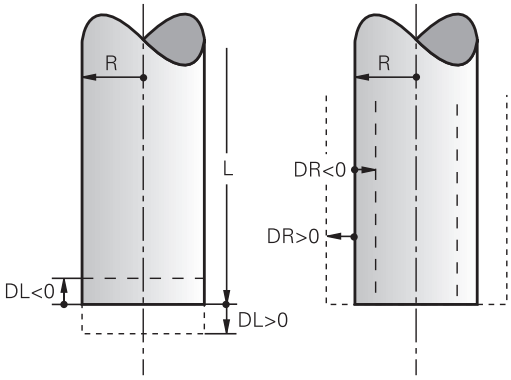

> Delta values from the tool table influence the graphical representation of the clearing simulation.
>
> Delta values from the **T** block influence the position display depending on the optional machine parameter **progToolCallDL** (no. 124501).

Entering tool data into the program

> The machine tool builder determines the scope of function of the **G99** function. Refer to your machine manual.

The number, length and radius of a specific tool is defined in the **G99** block of the part program:

- Select the tool definition: Press the **TOOL DEF** key

TOOL DEF

- **Tool number**: Each tool is uniquely identified by its tool number
- **Tool length**: Compensation value for the tool length
- **Tool radius**: Compensation value for the tool radius

> In the programming dialog, you can transfer the value for tool length and tool radius directly into the input line by pressing the desired axis soft key.

Example

```
N40 G99 T5 L+10 R+5 *
```

Enter tool data into the table

You can define and store up to 32,767 tools and their tool data in a tool table. Also see the editing functions later in this chapter.
In order to be able to assign various compensation data to a tool (indexing the tool number), insert a line and extend the tool number by a dot and a number from 1 to 9 (e.g. **T 5.2**).

You must use tool tables if

- If you wish to use indexed tools such as stepped drills with more than one length compensation value
- If your machine has an automatic tool changer
- If you want to apply fine roughing with machining Cycle G122
  Further information: Cycle Programming User's Manual
- If you want to work with machining Cycles 251 to 254,
  Further information: Cycle Programming User's Manual

If you create or manage further tool tables, the file name has to start with a letter.

You can select either a list view or form view for tables using the Screen Layout key.

When you open the tool table you can also change its layout

Tool table: Standard tool data

Abbr.	Inputs	Dialog
T	Number by which the tool is called in the program (e.g. 5, indexed: 5.2)	-
NAME	Name by which the tool is called in the program (max. 32 characters, all capitals, no spaces)	**Tool name?**
L	Compensation value for tool length L	**Tool length?**
R	Compensation value for the tool radius R	**Tool radius?**
R2	Tool radius R2 for toroid cutters (only for 3-D radius compensation orgraphical representation of a machining operation with spherical cutters)	**Tool radius 2?**
DL	Delta value for tool length L	**Tool length oversize?**
DR	Delta value for tool radius R	**Tool radius oversize?**
DR2	Delta value for tool radius R2	**Tool radius oversize 2?**
TL	Set tool lock (**TL**: for **T**ool **L**ocked	**Tool locked? Yes=ENT/No=NO ENT**
RT	Number of a replacement tool – if available – as replacement tool (**RT**: for **R**eplacement **T**ool) An empty field or entry **0** means no replacement tool has been defined	**Replacement tool?**
TIME1	Maximum tool life in minutes. This function can vary depending on the individual machine tool. Your machine manual provides more information	**Maximum tool age?**
TIME2	Maximum tool life in minutes during **TOOL CALL**: If the current tool life reaches or exceeds this value, the TNC changes the tool during the next **TOOL CALL** (see also CUR_TIME)	**Max. tool age for TOOL CALL?**
CUR_TIME	Current age of the tool in minutes: The TNC automatically counts the current tool life (**CUR_TIME**: for **CUR**rent **TIME**. A starting value can be entered for used tools	**Current tool age?**
TYPE	Tool type: Press the ENT key to edit the field; the GOTO key opens a window in which you can select the tool type. You can assign tool types to specify the display filter settings such that only the selected type is visible in the table	**Tool type?**
DOC	Comment on tool (max. 32 characters)	**Tool comment?**
PLC	Information on this tool that is to be sent to the PLC	**PLC status?**
LCUTS	Tooth length of the tool for Cycle 22	**Tooth length in the tool axis?**
ANGLE	Maximum plunge angle of the tool for reciprocating plunge-cut in Cycles 22 and 208	**Maximum plunge angle?**
NMAX	Limit the spindle speed for this tool. The programmed value is monitored (error message) as well as an increase in the shaft speed via the potentiometer. Function inactive: Enter **-**. **Input range**: 0 to +999,999, if function not active: enter **-**	**Maximum shaft speed [rpm]**

Abbr.	Inputs	Dialog
LIFTOFF	Definition of whether the TNC should retract the tool in the direction of the positive tool axis at an NC stop in order to avoid leaving dwell marks on the contour. If **Y** is defined, the TNC retracts the tool from the contour, provided M148 has been activated. **Further Information:** Automatically retract tool from the contour at an NC stop: M148, page 375	**Retraction permissible? Yes=ENT/No=NOENT**
TP_NO	Reference to the number of the touch probe in the touch-probe table	**Number of the touch probe**
T-ANGLE	Point angle of the tool. Is used by the Centering cycle (Cycle 240) in order to calculate the centering depth from the diameter entry	**point angle**
PITCH	Thread pitch of the tool. Used by tapping cycles (Cycle 206, Cycle 207 and Cycle 209). A positive algebraic sign means a right-hand thread.	**Tool thread pitch?**
AFC	Control setting for the adaptive feed control AFC that you have defined in the **NAME** column of the AFC.TAB table. Display control strategies using soft key, display **SELECT** and accept using the **OK** soft key (display in tool administration using the **GOTO** key and accept using the **SELECT** soft key). **Input range**: max. 10 characters	**Feedback-control strategy**
AFC-LOAD	Tool-dependent standard reference power for adaptive feed control AFC. If you enter a tool-dependent standard reference power using the **AFC-LOAD** column, the control stops executing teach-in cuts. The control immediately uses the value given for regulation. You specify the value for the tool-dependent standard reference once in advance with a teach-in cut. Adaptive feed control is not possible for values smaller than 2%.	**Reference power for AFC [%]**
LAST_USE	Date and time that the tool was last inserted via **TOOL CALL**	**Date/time of last tool call**
PTYP	Tool type for evaluation in the pocket table Function is defined by the machine manufacturer. The machine documentation provides further information	**Tool type for pocket table?**
ACC	Activate or deactivate active chatter control for the respective tool (page 405). **Input range**: N (inactive) and Y (active)	**ACC active? Yes=ENT/No=NOENT**
KINEMATIC	Display tool carrier kinematics using the **SELECT** soft key and confirm file name and path with the **OK** soft key(in tool management, display using the **GOTO** key and confirm with the **SELECT** soft key). **Further Information:** Allocate parameterized tool carriers, page 391	**Tool-carrier kinematics**

Tool table: Tool data required for automatic tool measurement

Description of the cycles governing automatic tool measurement.
Further information: Cycle Programming User's Manual

Abbr.	Inputs	Dialog
CUT	Number of teeth (99 teeth maximum)	**Number of teeth?**
LTOL	Permissible deviation from tool length L for wear detection. If the entered value is exceeded, the TNC locks the tool (status **L**). Input range: 0 to 0.9999 mm	**Wear tolerance: length?**
RTOL	Permissible deviation from tool radius R for wear detection. If the entered value is exceeded, the TNC locks the tool (status **L**). Input range: 0 to 0.9999 mm	**Wear tolerance: radius?**
R2TOL	Permissible deviation from tool radius R2 for wear detection. If the entered value is exceeded, the TNC locks the tool (status **L**). Input range: 0 to 0.9999 mm	**Wear tolerance: Radius 2?**
DIRECT	Cutting direction of the tool for measuring the tool during rotation	**Cutting direction? M4=ENT/M3=NOENT**
R-OFFS	Tool radius measurement: Tool offset between stylus center and tool center. Default setting: No value entered (offset = tool radius)	**Tool offset: radius?**
L-OFFS	Radius measurement: Tool offset between upper surface of stylus and lower surface of tool in addition to **offsetToolAxis**. Default: 0	**Tool offset: length?**
LBREAK	Permissible deviation from tool length **L** for breakage detection. If the entered value is exceeded, the TNC locks the tool (status **L**). Input range: 0 to 3.2767 mm	**Breakage tolerance: length?**
RBREAK	Permissible deviation from tool radius R for breakage detection. If the entered value is exceeded, the TNC locks the tool (status **L**). Input range: 0 to 0.9999 mm	**Breakage tolerance: radius?**

Editing the tool table

The tool table that is active during execution of the part program is designated TOOL.T and must be saved in the **TNC:\table** directory.

Other tool tables that are to be archived or used for test runs are given different file names with the extension .T. By default, for the **Test Run** and **Programming** modes the TNC also uses the TOOL.T tool table. In the **Test Run** mode, press the **TOOL TABLE** soft key to edit it.

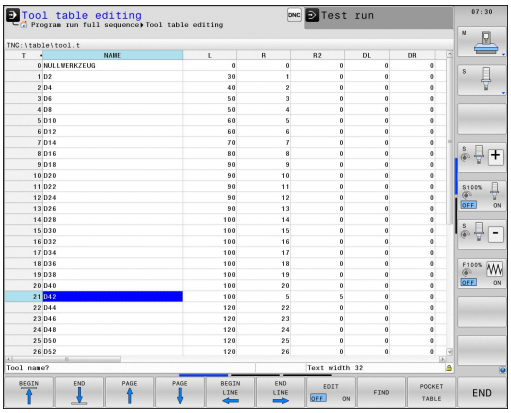

To open the tool table TOOL.T:

- Select any machine operating mode

- Select the tool table: Press the **TOOL TABLE** soft key

- Set the **EDIT** soft key to **ON**

> If you edit the tool table, the selected tool is locked. If this tool is needed in the NC program being used, the TNC shows the message: **Tool table locked**.

Displaying only specific tool types (filter setting)

- Press the **TABLE FILTER** soft key
- Select the tool type by pressing a soft key: The TNC only shows tools of the type selected
- Cancel the filter: Press the **SHOW ALL** soft key

> The machine tool builder adapts the features of the filter function to the requirements of your machine. Refer to your machine manual.

Hiding or sorting the tool table columns

You can adapt the layout of the tool table to your needs. Columns that are not to be displayed can be simply hidden:

- Press the **SORT/HIDE COLUMNS** soft key (fourth soft-key row)
- Select the appropriate column name with the arrow key
- Press the **HIDE COLUMN** soft key to remove this column from the table view

You can also modify the sequence of columns in the table:

- You can also modify the sequence of columns in the table with the **Move to** dialog. The entry highlighted in **Displayed columns** is moved in front of this column

You can use a connected mouse or the TNC keyboard to navigate in the form. Navigation using the TNC keyboard:

- Press the navigation keys to go to the entry fields. Use the arrow keys to navigate within an entry field. Press the **GOTO** key to open pop-down menus

With the **Fix number of columns** function, you can define how many columns (0 -3) are fixed to the left screen edge. These columns are also displayed if you navigate in the table to the right.

Opening any other tool table

- Select the **Programming** mode of operation

PGM MGT

- Call the File Manager
- Select a file or enter a new file name. Confirm your entry with the **ENT** key or the soft key **SELECT**

When you have opened the tool table, you can edit the tool data by moving the cursor to the desired position in the table with the arrow keys or the soft keys. You can overwrite the stored values, or enter new values at any position. Miscellaneous functions are set out in the table below.

Soft key	Editing functions for tool tables
BEGIN	Select the table start
END	Select the table end
PAGE	Select the previous page in the table
PAGE	Select the next page in the table
FIND	Find the text or number
BEGIN LINE	Move to beginning of line

Soft key	Editing functions for tool tables
END LINE	Move to end of line
COPY FIELD	Copy highlighted field
PASTE FIELD	Insert copied field
APPEND N LINES	Add the entered number of lines (tools) at the end of the table
INSERT LINE	Adding a row with tool number for entering
DELETE LINE	Delete current line (tool)
SORT	Sort the tools according to the content of a column
DRILL	Show all drills in the tool table
CUTTER	Show all cutters in the tool table
TAP/ THREAD CUTTER	Show all taps/thread cutters in the tool table
TOUCH PROBE	Show all touch probes in the tool table

Exiting any other tool table

- Call the file manager and select a file of a different type, such as a part program

Tool table for turning tools

When managing turning tools, different geometric descriptions to those for milling or drilling tools are considered. To be able to execute tool radius compensation, for example, you have to define the tool radius. The TNC provides special tool management for turning tools to support this definition process.

Further Information: Tool data, page 473

Importing tool tables

The machine manufacturer can adapt the **IMPORT TABLE** function. Refer to your machine manual.

If you export a tool table from an iTNC 530 and import it into a TNC 640, you have to adapt its format and content before you can use the tool table. On the TNC 640, you can adapt the tool table conveniently with the **IMPORT TABLE** function. The TNC converts the contents of the imported tool table to a format valid for the TNC 640 and saves the changes to the selected file.

Follow this procedure:

- Save the tool table of the iTNC 530 to the **TNC:\table** directory
- Select the mode **Programming**
- Call the file manager: Press the **PGM MGT** key
- Move the cursor to the tool table you want to import
- Select the **MORE FUNCTIONS**
- Shift the soft key row
- Select the **IMPORT TABLE** soft key: The TNC inquires whether you really want to overwrite the selected tool table
- Do not overwrite the file: Press the **CANCEL** soft key; or
- Overwrite the file: Press the **OK** soft key
- Open the converted table and check its contents

The following characters are permitted in the **Name** column of the tool table: # $ % & , - . 0 1 2 3 4 5 6 7 8 9 @ A B C D E F G H I J K L M N O P Q R S T U V W X Y Z _

The TNC changes a comma in the tool name to a period during import.

The TNC overwrites the selected tool table when running the **IMPORT TABLE** function. To avoid losing data, be sure to make a backup copy of your original tool table before importing it!

The procedure for copying tool tables using the TNC file manager is described in the section on file management.

Further Information: Copying a table, page 126

When tool tables are imported from an iTNC 530, all existing tools are imported along with their corresponding tool type. Tool types not present are imported as type **Undefined**. Check the tool table after the import.

Pocket table for tool changer

The machine tool builder adapts the features of the pocket table to the requirements of your machine. Refer to your machine manual.

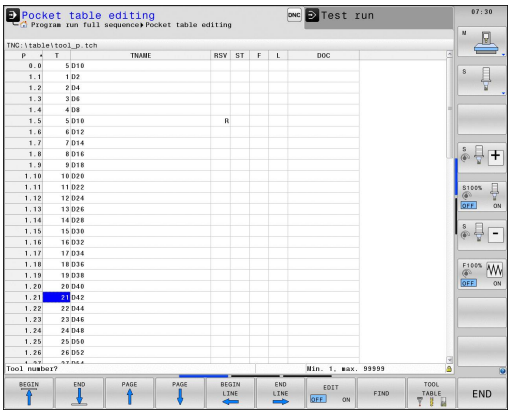

You need a pocket table for automatic tool changing. You manage the assignment of your tool changer in the pocket table. The pocket table is in the **TNC:\TABLE** directory. The machine manufacturer can amend the name, path and content of the pocket table. If you wish, you can select different views using the soft keys in the **TABLE FILTER** menu.

Editing a pocket table in a Program Run operating mode

- Select the tool table: Press the **TOOL TABLE** soft key

- Select the pocket table: Press the **POCKET TABLE** soft key

- Set the **EDIT** soft key to **ON.** On your machine this might not be necessary or even possible. Refer to your machine manual

Selecting a pocket table in Programming mode

PGM MGT

- Call the File Manager
- Display the file types: Press the **SHOW ALL** soft key
- Select a file or enter a new file name. Conclude your entry with the **ENT** key or the **SELECT** soft key

Abbr.	Inputs	Dialog
P	Pocket number of the tool in the tool magazine	-
T	Tool number	**Tool number?**
RSV	Pocket reservation for box magazines	**Pocket reserv.: Yes = ENT / No = NOENT**
ST	Special tool (**ST**); If your special tool blocks pockets in front of and behind its actual pocket, these additional pockets need to be locked in column L (status L).	**Special tool?**
F	The tool is always returned to the same pocket in the tool magazine	**Fixed pocket? Yes = ENT / No = NO ENT**
L	Locked pocket (**L**: for **L**ocked)	**Pocket locked Yes = ENT / No = NO ENT**
DOC	Display of the comment to the tool from TOOL.T	-
PLC	Information on this tool pocket that is to be sent to the PLC	**PLC status?**
P1 ... P5	Function is defined by the machine tool builder. The machine tool documentation provides further information	**Value?**
PTYP	Tool type. Function is defined by the machine tool builder. The machine tool documentation provides further information	**Tool type for pocket table?**
LOCKED_ABOVE	Box magazine: Lock the pocket above	**Lock the pocket above?**
LOCKED_BELOW	Box magazine: Lock the pocket below	**Lock the pocket below?**
LOCKED_LEFT	Box magazine: Lock the pocket at left	**Lock the pocket at left?**
LOCKED_RIGHT	Box magazine: Lock the pocket at right	**Lock the pocket at right?**

Soft key	Editing functions for pocket tables
BEGIN	Select the table start
END	Select the table end
PAGE	Select the previous page in the table
PAGE	Select the next page in the table
RESET POCKET TABLE	Reset pocket table
RESET COLUMN T	Reset tool number T column
BEGIN LINE	Go to beginning of the line
END LINE	Go to end of the line
SIMULATED TOOL CHANGE	Simulate a tool change
SELECT	Select a tool from the tool table: The TNC shows the contents of the tool table. Use the arrow keys to select a tool, press **OK** to transfer it to the pocket table
EDIT CURRENT FIELD	Edit the current field
SORT	Sort the view

The machine manufacturer defines the features, properties and designations of the various display filters. Refer to your machine manual.

Call tool data

A **T** in the part program is defined with the following data:

- Select the tool call function with the **TOOL CALL** key

TOOL CALL

- **Tool number**: Enter the number or name of the tool. The tool must already be defined in a **G99** block or in the tool table. With the **TOOL NAME** soft key you can enter a name. With the **QS** soft key you enter a string parameter. The TNC automatically places the tool name in quotation marks. You have to assign a tool name to a string parameter first. Names always refer to an entry in the active tool table TOOL .T. To call a tool with different correction values, enter the index defined in the tool table after a decimal point. Using the **SELECT** soft key you can display a window where you can select a tool defined in the TOOL.T tool table directly without entering the number or name
- **Working spindle axis X/Y/Z**: Enter the tool axis
- **Spindle speed S**: Enter the spindle speed S in revolutions per minute (rpm). Instead, you can define the cutting speed Vc in meters per minute (m/min). Press the **VC** soft key
- **Feed rate F**: Enter the feed rate **F** in millimeters per minute (mm/min). The feed rate is effective until you program a new feed rate in a positioning block or in a **T** block
- **Tool length oversize DL**: Enter the delta value for the tool length
- **Tool radius oversize DR**: Enter the delta value for the tool radius
- **Tool radius oversize DR2**: Enter the delta value for tool radius 2

If you open a pop-up window for tool selection, the TNC marks all tools available in the tool magazine green.

You can also search for a tool in the pop-up window. To do so, press the **GOTO** or **SEARCH** soft key and enter the tool number or tool name. With the **OK** soft key you can load the tool into the dialog box.

Example: Tool call

Call tool number 5 in the tool axis Z with a spindle speed 2500 rpm and a feed rate of 350 mm/min. The tool length and tool radius 2 are to be programmed with an oversize of 0.2 and 0.05 mm, the tool radius with an undersize of 1 mm.

```
N20 T 5.2 G17 S2500 DL+0.2 DR-1
```

The character **D** preceding **L**, **R** and **R2** designates delta values.

Preselection of tools

The preselection of tools with **G51** can vary depending on the individual machine. Refer to your machine manual.

If you are working with tool tables, use a **G51** block to preselect the next tool. Simply enter the tool number or a corresponding Q parameter, or type the tool name in quotation marks.

Tool change

Automatic tool change

The tool change function can vary depending on the individual machine tool. Refer to your machine manual.

If your machine tool has automatic tool changing capability, the program run is not interrupted. When the TNC reaches a **T** it replaces the inserted tool by another from the tool magazine.

Automatic tool change if the tool life expires: M101

The function of **M101** can vary depending on the individual machine tool. Refer to your machine manual.

When the specified tool life has expired, the TNC can automatically insert a replacement tool and continue machining with it. Activate the miscellaneous function **M101** for this. **M101** is reset with **M102.**

Enter the respective tool life after which machining is to be continued with a replacement tool in the **TIME2** column of the tool table. In the **CUR_TIME** column the TNC enters the current tool life. If the current tool life is higher than the value entered in the **TIME2** column, a replacement tool will be inserted at the next possible point in the program no later than one minute after expiration of the tool life. The change is made only after the NC block has been completed.

The TNC performs the automatic tool change at a suitable point in the program. The automatic tool change is not performed:

- During execution of machining cycles
- While radius compensation (**G41**/**G42**) is active
- Directly after an approach function **APPR**
- Directly before a departure function **DEP**
- Directly before and after **G24** and **G25**
- During execution of macros
- During execution of a tool change
- Directly after a **T** block or **G99**
- During execution of SL cycles

Caution: Danger to the workpiece and tool!
Switch off the automatic tool change with **M102** if you are working with special tools (e.g. side mill cutter) because the TNC at first always moves the tool away from the workpiece in tool axis direction.

Depending on the NC program, the machining time can increase as a result of the tool life verification and calculation of the automatic tool change. You can influence this with the optional entry element **BT** (block tolerance).

If you enter the **M101** function, the TNC continues the dialog by requesting the **BT**. Here you define the number of NC blocks (1 - 100) by which the automatic tool change may be delayed. The resulting time period by which the tool change is delayed depends on the content of the NC blocks (e.g. feed rate, path). If you do not define **BT**, the TNC uses the value 1 or, if applicable, a default value defined by the machine manufacturer.

The more you increase the value of **BT**, the smaller will be the effect of an extended program duration through **M101**. Please note that this will delay the automatic tool change!

To calculate a suitable output value for **BT** use the formula **BT = 10 : Average machining time of an NC block in seconds**. Round up to the next odd integer. If the calculated result is greater than 100, use the maximum input value of 100.

If you want to reset the current age of a tool (e.g. after changing the indexable inserts), enter the value 0 in the CUR_TIME column.

The **M101** function is not available for turning tools and in turning mode.

Prerequisites for NC blocks with surface-normal vectors and 3-D compensation

The active radius (**R** + **DR**) of the replacement tool must not differ from the radius of the original tool. You can enter the delta values (**DR**) either in the tool table or in the **T** block. If there are any deviations, the TNC displays an error message and does not replace the tool. You can suppress this message with the M function **M107,** and reactivate it with **M108.**

Tool usage test

The tool usage test function must be enabled by your machine manufacturer. Refer to your machine manual.

The tool usage test function is not available for turning tools.

In order to be able to conduct a tool usage test, tool usage files have to be generated.

Further Information: Tool usage file, page 604

The NC program has to be completely simulated in the **Test Run** operating mode or executed in the **Program Run, Full Sequence or Single Block** operating mode.

Using a tool usage test

Before starting a program in the Program Run operating mode, you can use the **TOOL USAGE** and **TOOL USAGE TEST** soft keys to check whether the tools being used in the selected program are available and have sufficient remaining service life. The TNC then compares the actual service life values in the tool table with the nominal values from the tool usage file.

After you have pressed the **TOOL USAGE TEST** soft key, the TNC displays the result of the tool usage test in a pop-up window. To close the pop-up window, press the **ENT** key.

The TNC saves the tool usage times in a separate file with the extension **pgmname.I.T.DEP**. This file is only visible when the machine parameter **dependentFiles** (no. 122101) is set to **MANUAL**. The generated tool usage file contains the following information:

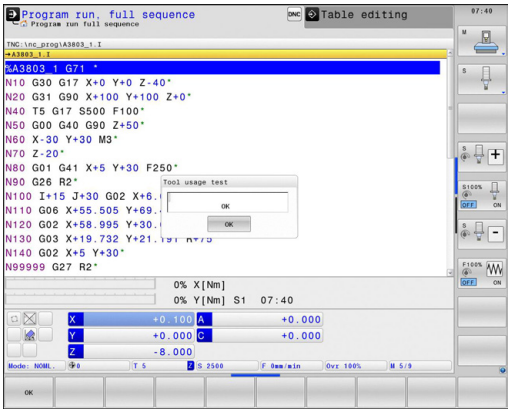

Column	Meaning
TOKEN	■ **TOOL**: Tool usage time per **TOOL CALL**. The entries are listed in chronological order ■ **TTOTAL**: Total usage time of a tool ■ **STOTAL**: Call of a subprogram. The entries are listed in chronological order ■ **TIMETOTAL**: The total machining time of the NC program is entered in the **WTIME** column. In the **PATH** column the TNC saves the path name of the corresponding NC programs. The **TIME** column shows the sum of all **TIME** entries (feed time without rapid traverse). The TNC sets all other columns to 0 ■ **TOOLFILE**: In the **PATH** column, the TNC saves the path name of the tool table with which you conducted the test run. This enables the TNC during the actual tool usage test to detect whether you performed the test run with the TOOL.T
TNR	Tool number (**-1**: No tool inserted yet)
IDX	Tool index
NAME	Tool name from the tool table
TIME	Tool usage time in seconds (feed time without rapid traverse movements)
WTIME	Tool usage time in seconds (total usage time between tool changes)
RAD	**Tool radius R** + **Oversize of tool radius DR** from the tool table (in mm).
BLOCK	Block number in which the **TOOL CALL** block was programmed
PATH	■ **TOKEN** = **TOOL**: Path name of the active main program or subprogram ■ **TOKEN** = **STOTAL**: Path name of the subprogram
T	Tool number with tool index

Column	Meaning
OVRMAX	Maximum feed rate override that occurred during machining. The TNC enters the value 100 (%) during the test run
OVRMIN	Minimum feed rate override that occurred during machining. The TNC enters the value -1 during the test run
NAMEPROG	■ 0: The tool number is programmed ■ 1: The tool name is programmed

There are two ways to run a tool usage test for a pallet file:

- The cursor in the pallet file is on a pallet entry: The TNC runs the tool usage test for the entire pallet
- The cursor in the pallet file is on a pallet entry: The TNC runs the tool usage test for the entire pallet

5.3 Tool compensation

Introduction

The TNC adjusts the tool path by the compensation value for the tool length in the spindle axis. In the machining plane, it compensates the tool radius.

If you are writing the part program directly on the TNC, the tool radius compensation is effective only in the working plane.

The TNC accounts for the compensation value in up to five axes including the rotary axes.

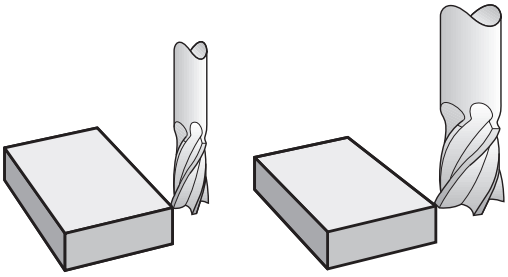

Tool length compensation

Length compensation becomes effective automatically as soon as a tool is called. To cancel length compensation, call a tool with the length L=0 (e.g. **T 0**).

> **!** **Danger of collision!**
> If you cancel a positive length compensation with **T 0** the distance between tool and workpiece will be reduced.
> After **T** the path of the tool in the spindle axis, as entered in the part program, is adjusted by the difference between the length of the previous tool and that of the new one.

For tool length compensation, the control takes the delta values from both the **T** block and the tool table into account.

Compensation value = **L** + **DL** $_{\text{T block}}$ + **DL** $_{\text{TAB}}$ with

L:	Tool length **L** from **G99** block or tool table
DL $_{\text{T block}}$:	Oversize for length **DL** in the **T** block
DL $_{\text{TAB}}$:	Oversize for length **DL** in the tool table

Tool radius compensation

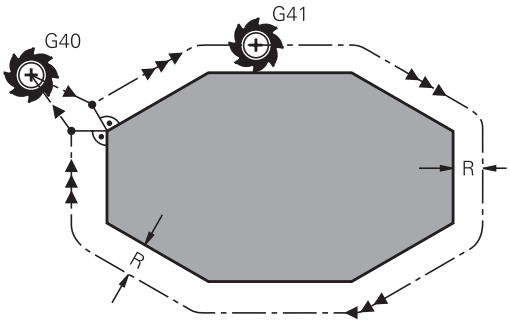

The block for programming a tool movement contains:

- **G41** or **G42** for radius compensation
- **G40**, if there is no radius compensation

The radius compensation is effective as soon as a tool is called and traversed with a straight line block in the working plane with **G41**or **G42**.

> The TNC automatically cancels radius compensation if you:
> - program a straight line block with **G40**
> - depart the contour with the **DEP** function
> - program a **PGM CALL**
> - Select a new program with **PGM MGT**

For radius compensation, the TNC takes the delta values from both the **T** block and the tool table into account:

Compensation value = **R** + $\mathbf{DR}_{\text{CALLT block}}$ + $\mathbf{DR}_{\text{TAB}}$ with

R: Tool radius **R** from **G99** block or tool table

$\mathbf{DR}_{\text{CALLT block}}$: Oversize for radius **DR** in the **T** block

$\mathbf{DR}_{\text{TAB}}$: Oversize for radius **DR** in the tool table

Contouring without radius compensation: G40

The tool center moves on the machining plane along the programmed path orto the programmed coordinates.

Applications: Drilling and boring, pre-positioning

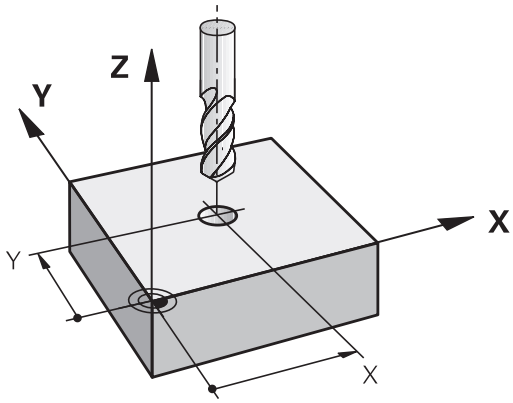

Contouring with radius compensation: G42 and G41

G42: The tool moves to the right of the programmed contour

G41: The tool moves to the left of the programmed contour

The tool center moves along the contour at a distance equal to the radius. "Right" or "left" are to be understood as based on the direction of tool movement along the workpiece contour.

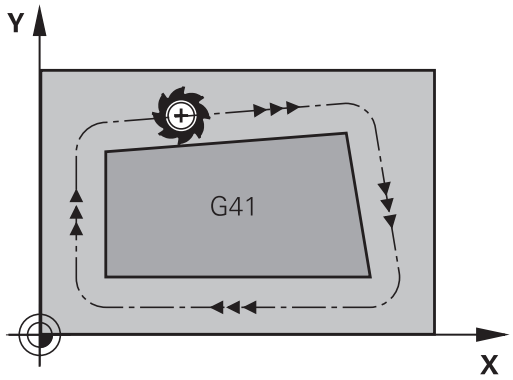

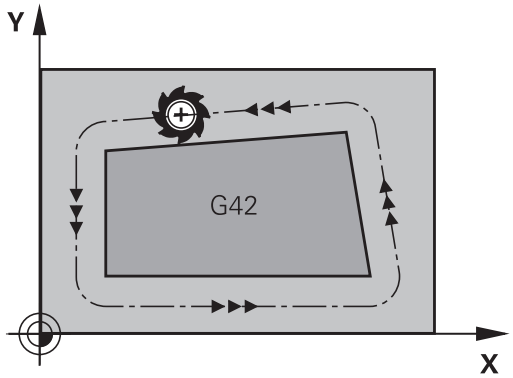

> Between two program blocks with different radius compensations **G42** and **G41** you must program at least one traversing block in the working plane without radius compensation (that is, with **G40**).
>
> The TNC does not put radius compensation into effect until the end of the block in which it is first programmed.
>
> In the first block in which radius compensation is activated with **G42/G41** or canceled with **G40** the TNC always positions the tool perpendicular to the programmed starting or end position. Position the tool at a sufficient distance from the first or last contour point to prevent the possibility of damaging the contour.

Entering radius compensation

Radius compensation is entered in a **G01** block. Enter the coordinates of the target point and confirm your entry with the **ENT** key.

G41 ▶ Select tool movement to the left of the programmed contour: Select function **G41**, or

G42 ▶ Select tool movement to the right of the programmed contour: Select function **G42**, or

G40 ▶ Select tool movement without radius compensation or cancel radius compensation: Select function **G40**

END ▶ Terminate the block: Press the **END** key

Radius compensation: Machining corners

- Outside corners:
  If you program radius compensation, the TNC moves the tool around outside corners on a transitional arc. If necessary, the TNC reduces the feed rate at the outside corners to reduce machine stress, e.g. in the case of very great changes of direction
- Inside corners:
  The TNC calculates the intersection of the tool center paths at inside corners under radius compensation. From this point it then starts the next contour element. This prevents damage to the workpiece at the inside corners. The permissible tool radius is therefore limited by the geometry of the programmed contour

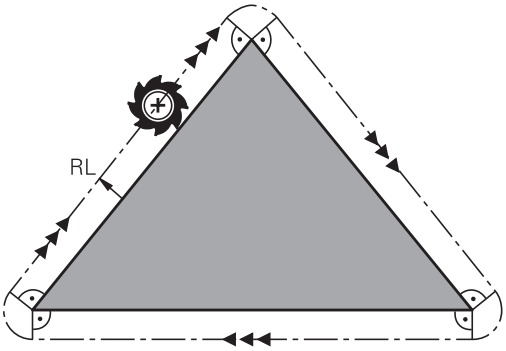

! **Danger of collision!**
To prevent the tool from damaging the contour, be careful not to program the starting or end position for machining inside corners at a corner of the contour.

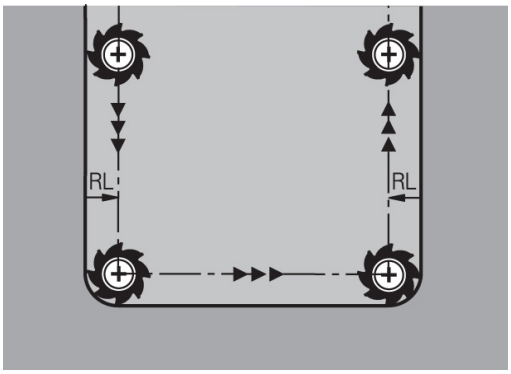

5.4 Tool management (option number 93)

Basics

Tool management is a machine-dependent function, which may be partly or completely deactivated. The machine tool builder defines the exact range of functions. Refer to your machine manual.

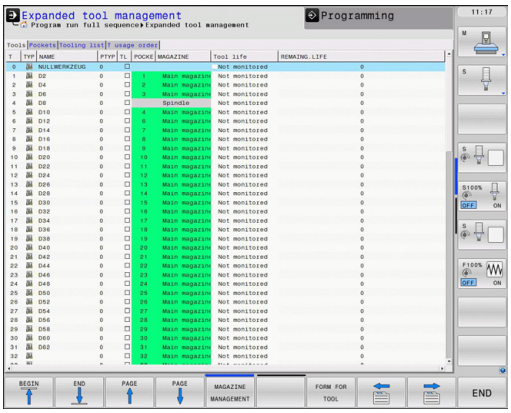

In tool management, your machine manufacturer can provide a wide range of functions for tool handling. Examples:

- Easily readable and, if you desired, adaptable representation of the tool data in fillable forms
- Any description of the individual tool data in the new table view
- Mixed representation of data from the tool table and the pocket table
- Fast sorting of all tool data by mouse
- Use of graphic aids, e.g. color coding of tool or magazine status
- Program-specific list of all available tools
- Program-specific usage sequence of all tools
- Copying and pasting of all tool data pertaining to a tool
- Graphic depiction of tool type in the table view and in the detail view for a better overview of the available tool types

If you edit a tool in tool management, the selected tool is locked. If this tool is required in the NC program being used, the TNC shows the message: **Tool table locked**.

Calling tool management

The tool management call can differ as described below. Refer to your machine manual.

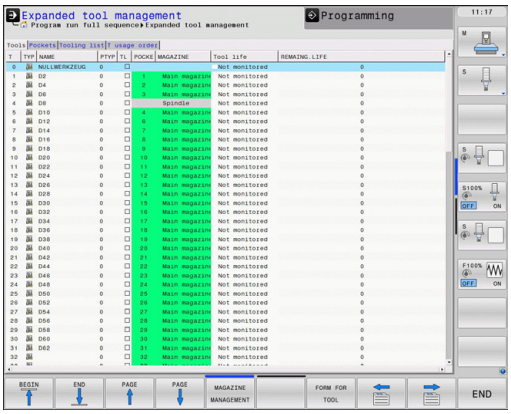

- Select the tool table: Press the **TOOL TABLE** soft key

- Scroll through the soft-key row

- Select the **TOOL MANAGEMENT** soft key: The TNC moves to the new table view

Tool management view

In the new view, the TNC presents all tool information in the following four tabs:

- **Tools**: Tool specific information
- **Pockets**: Pocket-specific information
- **Assembly list**: List of all tools in the NC program that is selected in the Program Run mode (only if you have already created a tool usage file)
  Further Information: Tool usage test, page 191
- **T usage sequence**: List of the sequence of all tools that are inserted in the program selected in the Program Run mode (only if you have already created a tool usage file)
  Further Information: Tool usage test, page 191

Editing tool management

The tool management can be operated by mouse or with the keys and soft keys:

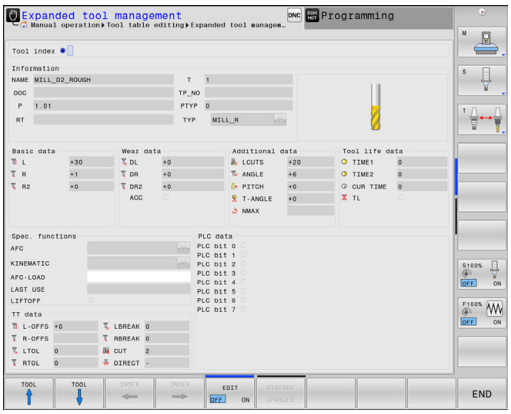

Soft key	Editing functions of tool management
BEGIN	Select the table start
END	Select the table end
PAGE	Select the previous page in the table
PAGE	Select the next page in the table
FORM FOR TOOL	Call the form view of the marked tool. Alternative function: Press the **ENT** key
	Changing tab: **Tools**, **Pockets**, **Assembly list**, **T usage sequence**
FIND	Search function: Here you can select the column to be searched and then the search term either from a list or by entering it
TOOL IMPORT	Import tools
EXPORT TOOL	Export tools
DELETE MARKED TOOLS	Delete marked tools
APPEND N LINES	Add several lines at end of table
UPDATE THE VIEW	Update table view
PROG. TOOL DISPLAY HIDE	Show the programmed tools column (if the **Pockets** tab is active)
COLUMN SORT MOVE	Define the settings: ■ **SORT COLUMN** active: Click the column header to sort the content of the column ■ **MOVE COLUMN** active: The column can be moved by drag and drop
RESET SETTINGS	Reset the manually changed settings (move columns) to the original condition

You can edit the tool data only in the form view, which you can activate by pressing the **FORM FOR TOOL** soft key or the **ENT** key for the currently highlighted tool.

If you use the tool management without a mouse, then you can activate and deactivate functions with the "-/+" key.

In the tool management, use the **GOTO** soft key to search for the tool number or pocket number.

In addition, you can perform the following functions by mouse:

- Sorting function. You can sort the data in ascending or descending order (depending on the active setting) by clicking a column of the table head.
- Arrange columns. You can arrange the columns in any sequence you want by clicking a column of the table head and then moving it with the mouse key pressed down. The TNC does not save the current column sequence when you exit the tool management (depending on the active setting)
- Show miscellaneous information in the form view: The TNC displays tool tips when you leave the mouse pointer on an active entry field for more than a second and when you have set the **EDIT ON/OFF** soft key to **ON**

Editing with active form view

If the form view is active, the following functions are available to you:

Soft key	Editing functions form view
TOOL ↑	Select the tool data of the previous tool
TOOL ↓	Select the tool data of the next tool
INDEX ←	Select previous tool index (only active if indexing is enabled)
INDEX →	Select the next tool index (only active if indexing is enabled)
DISCARD CHANGES	Discard all changes made since the form was last called ("Undo" function)
INSERT LINE	Insert a line (tool index) (2nd soft-key row)
DELETE LINE	Delete a line (tool index) (2nd soft-key row)
COPY DATA RECORD	Copy the tool data of the selected tool (2nd soft-key row)
INSERT DATA REC.	Insert the copied tool data in the selected tool (2nd soft-key row)

Deleting marked tool data

Using this function you can simply delete tool data that you no longer need.

Follow the steps outlined below for deleting:

- In the tool management you use the arrow keys or mouse to mark the tool data that you wish to delete
- Select the **DELETE MARKED TOOLS** soft key and the TNC shows a pop-up window listing the tool data to be deleted
- Press the **START** soft key to start the delete process: The TNC shows the status of the delete process in a pop-up window
- Terminate the delete process by pressing the **END** key or soft key

- The TNC deletes all the data of all the tools selected. Make sure that you really no longer need the tool data, because there is no Undo function available.
- You cannot delete the tool data of tools still stored in the pocket table. First remove the tool from the magazine.

Available tool types

The tool management displays the various tool types with an icon. The following tool types are available:

Icon	Tool type
	Undefined,****
	Milling cutter,MILL
	Drill,DRILL
	Tap,TAP
	Center drill,CENT
	Turning Tool,TURN
	Touch probe,TCHP
	Ream,REAM
	Countersink,CSINK
	Piloted counterbore(TSINK),TSINK
	Boring tool,BOR
	Back boring tool,BCKBOR
	Thread mill,GF
	Thread mill w/ countersink,GSF
	Thread mill w/ single thread,EP
	Thread mill w/ indxbl insert,WSP
	Thread milling drill,BGF
	Circular thread mill,ZBGF

Icon	Tool type
	Roughing cutter (MILL_R),MILL_R
	Finishing cutter (MILL_F),MILL_F
	Rough/finish cutter,MILL_RF
	Floor finisher(MILL_FD),MILL_FD
	Side finisher (MILL_FS),MILL_FS
	Face milling cutter,MILL_FACE

Import and export tool data

Importing tool data

Using this function you can simply import tool data that you have measured externally on a presetting device, for example. The file to be imported must have the CSV format (**c**omma **s**eparated **v**alue). The **CSV** file format describes the structure of a text file for exchanging simply structured data. Accordingly, the import file must have the following structure:

- **Row 1**: In the first line you define the column names in which the data defined in the subsequent lines is to be placed. The column names are separated with a comma.
- **Other lines**: All the other lines contain the data that you wish to import into the tool table. The order of the data must match the order of the column names in Line 1. The data is separated with a comma, decimal numbers are to be denoted with a decimal point.

Follow the steps outlined below for importing:

- Copy the tool table to be imported to the hard disk of the TNC in the **TNC:\system\tooltab** directory
- Start expanded tool management
- Select the **IMPORT TOOL** soft key in the tool management: The TNC shows a pop-up window with the CSV files stored in the **TNC:\system\tooltab** directory
- Use the arrow keys or mouse to select the file to be imported and confirm with the **ENT** key: The TNC shows the content of the CSV file in a pop-up window
- Start import procedure with **START** soft key

- The CSV file to be imported must be stored in the **TNC:\system\tooltab** directory.
- If you import the tool data of tools whose numbers are in the pocket table, the TNC issues an error message. You can then decide whether you want to skip this data record or insert a new tool. The TNC inserts a new tool into the first empty line of the tool table.
- If the imported CSV file contains additional table columns not recognized by the control, a message to the effect that there are unknown columns appears during the import, with a note stating these values were not confirmed.
- Make sure that the column designations have been specified correctly.
  Further Information: Enter tool data into the table, page 176
- You can import any tool data; the associated data record does not have to contain all the columns (or data) of the tool table.
- The column names can be in any order, the data must be defined in the corresponding order.

Sample import file:

T,L,R,DL,DR	Line 1 with column names
4,125.995,7.995,0,0	Line 2 with tool data
9,25.06,12.01,0,0	Line 3 with tool data
28,196.981,35,0,0	Line 4 with tool data

Exporting tool data

Using this function you can simply export tool data to read it into the tool database of your CAM system, for example. The TNC stores the exported file in the CSV format (**c**omma **s**eparated **v**alue). The **CSV** file format describes the structure of a text file for exchanging simply structured data. The export file has the following structure:

- **Line 1**: In the first line the TNC stores the column names of all the relevant tool data to be defined. The column names are separated from each other by commas.
- **Further lines**: All the other lines contain the data of the tools that you have exported. The order of the data matches the order of the column names in Line 1. The data is separated by commas, the TNC outputs decimal numbers with a decimal point.

Follow the steps outlined below for exporting:

- In the tool management you use the arrow keys or mouse to mark the tool data that you wish to export
- Select the **EXPORT TOOL** soft key, the TNC shows a pop-up window: specify the name for the CSV file, confirm with the **ENT** key
- Press the **START** soft key to start the export process: The TNC shows the status of the delete export process in a pop-up window
- Terminate the export process by pressing the **END** key or soft key

The TNC always stores the exported CSV file in the **TNC:\system\tooltab** directory.

6

Programming: Programming Contours

6.1 Tool movements

Path functions

A workpiece contour is usually composed of several contour elements such as straight lines and circular arcs. With the path functions, you can program the tool movements for **straight lines** and **circular arcs**.

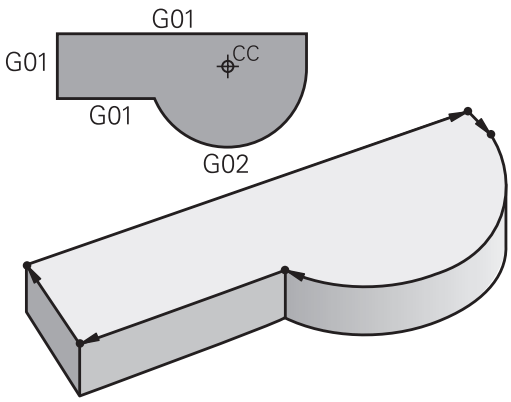

FK free contour programming

If a production drawing is not dimensioned for NC and the dimensions given are not sufficient for creating a part program, you can program the workpiece contour with the FK free contour programming. The TNC calculates the missing data.

With FK programming, you also program tool movements for **straight lines** and **circular arcs**.

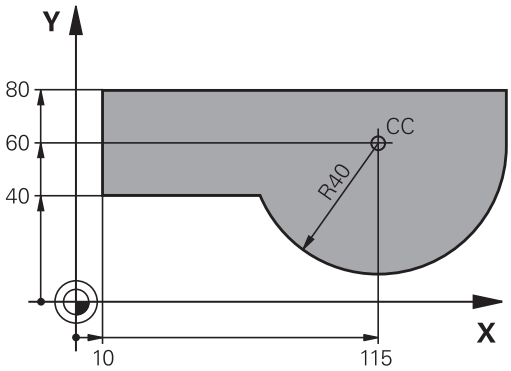

Miscellaneous functions M

With the TNC's miscellaneous functions you can affect

- the program run, e.g., a program interruption
- the machine functions, such as switching spindle rotation and coolant supply on and off
- the path behavior of the tool

Subprograms and program section repeats

If a machining sequence occurs several times in a program, you can save time and reduce the chance of programming errors by entering the sequence once and then defining it as a subprogram or program section repeat. If you wish to execute a specific program section only under certain conditions, you also define this machining sequence as a subprogram. In addition, you can have a part program call a separate program for execution.

Further Information: Programming: Subprograms and Program Section Repeats, page 277

Programming with Q parameters

Instead of programming numerical values in a machining program, you enter markers called Q parameters. You assign the values to the Q parameters separately with the Q parameter functions. You can use the Q parameters for programming mathematical functions that control program execution or describe a contour.

In addition, programming with Q parameters enables you to measure with the 3-D touch probe during the program run.

Further Information: Programming: Q Parameters, page 297

6.2 Fundamentals of path functions

Programming tool movements for workpiece machining

You create a machining program by programming the path functions for the individual contour elements in sequence. You do this by entering the coordinates of the end points of the contour elements given in the production drawing. The TNC calculates the actual path of the tool from these coordinates, and from the tool data and radius compensation.

The TNC moves all machine axes programmed in the NC block of a path function simultaneously.

Movement parallel to the machine axes

The NC block contains only one coordinate. The TNC thus moves the tool parallel to the programmed machine axis.

Depending on the individual machine, the machining program is executed by movement of either the tool or the machine table on which the workpiece is clamped. Path contours are programmed as if the tool were moving.

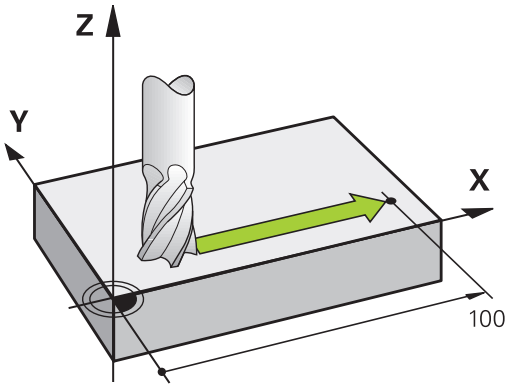

Example:

```
N50 G00 X+100 *
```

N50	Block number
G00	Path function "straight line at rapid traverse"
X+100	Coordinate of the end point

The tool retains the Y and Z coordinates and moves to the position X=100.

Movement in the main planes

The NC block contains two coordinates. The TNC thus moves the tool on the programmed plane.

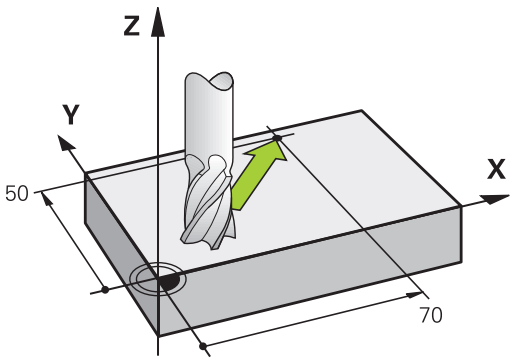

Example

```
N50 G00 X+70 Y+50 *
```

The tool retains the Z coordinate and moves on the XY plane to the position X=70, Y=50.

Three-dimensional movement

The NC block contains three coordinates. The TNC thus moves the tool spatially to the programmed position.

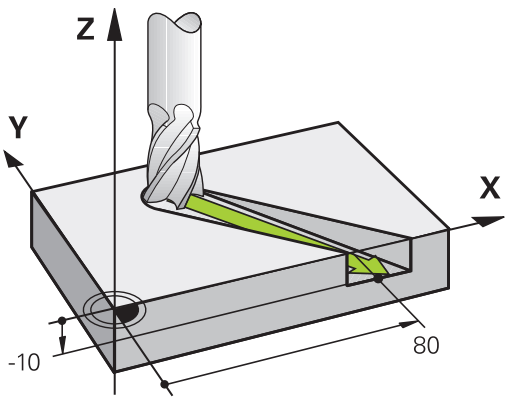

Example

```
N50 G01 X+80 Y+0 Z-10 *
```

Circles and circular arcs

The TNC moves two axes simultaneously on a circular path relative to the workpiece. You can define a circular movement by entering the circle center with **I** and **J**.

When you program a circle, the control assigns it to one of the main planes. This main plane for a **T** must be defined when the spindle axis are set:

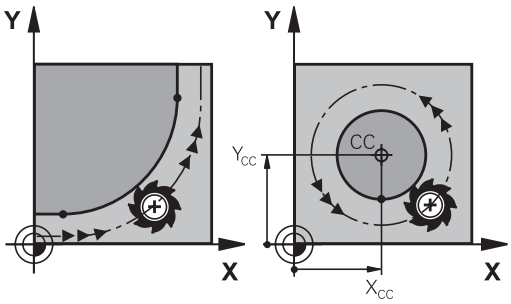

Spindle axis	Main plane
(G17)	**XY**, also UV, XV, UY
(G18)	**ZX**, also WU, ZU, WX
(G19)	**YZ**, also VW, YW, VZ

> You can program circles that do not lie parallel to a main plane using the Tilt working plane function or Q parameters. **Further information:** Cycle Programming User's Manual**Further Information:** Principle and overview of functions, page 298

Direction of rotation DR for circular movements

When a circular path has no tangential transition to another contour element, enter the direction of rotation as follows:

Clockwise direction of rotation: **G02/G12**

Counterclockwise direction of rotation: **G03/G13**

Radius compensation

The radius compensation must be in the block in which you move to the first contour element. You cannot activate radius compensation in a circle block. It must be activated beforehand in a straight-line block.

Further Information: Path contours Cartesian coordinates, page 224

Pre-position

> **!** **Danger of collision!**
> Before running a machining program, always pre-position the tool to prevent the possibility of damaging it or the workpiece.

6.3 Approaching and departing a contour

"From" and "To" points

The tool approaches the first contour point from the starting point. The starting point must be:

- Programmed without radius compensation
- Approachable without danger of collision
- Close to the first contour point

Example in the figure on the right:
If you set the starting point in the dark gray area, the contour will be damaged when the first contour element is approached.

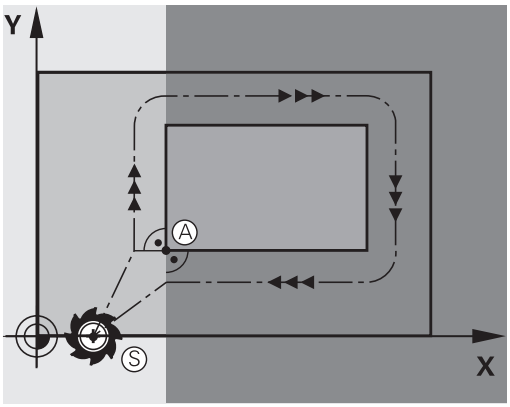

First contour point

You need to program a radius compensation for the tool movement to the first contour point.

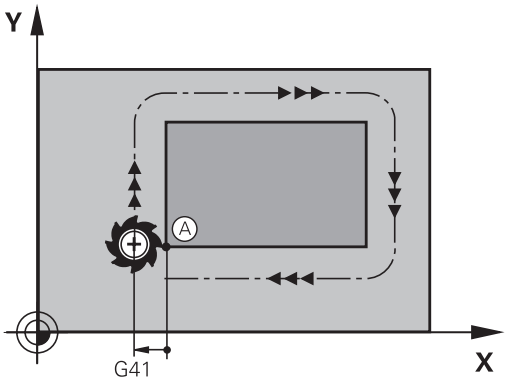

Approaching the starting point in the spindle axis

When the starting point is approached, the tool must be moved to the working depth in the spindle axis. If danger of collision exists, approach the starting point in the spindle axis separately.

NC blocks

```
N40 G00 Z-10 *
N30 G01 X+20 Y+30 G41 F350*
```

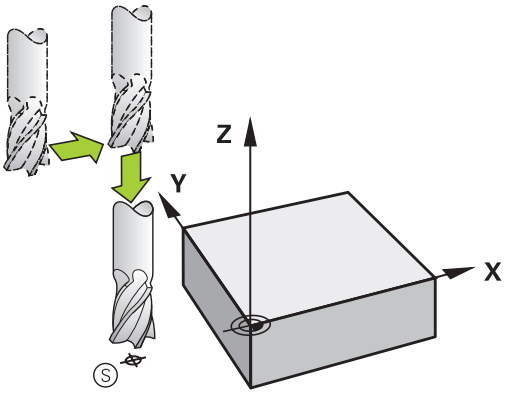

End point

The end point should be selected so that it is:

- Approachable without danger of collision
- Near to the last contour point
- In order to make sure the contour will not be damaged, the optimal ending point should lie on the extended tool path for machining the last contour element

Example in the figure on the right:
If you set the end point in the dark gray area, the contour will be damaged when the end point is approached.

Departing the end point in the spindle axis:
Program the departure from the end point in the spindle axis separately.

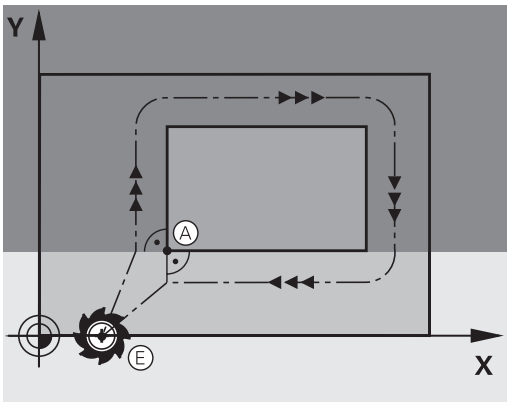

NC blocks

```
N50 G01 G40 X+60 Y+70 F700*
N60 G00 Z+250 *
```

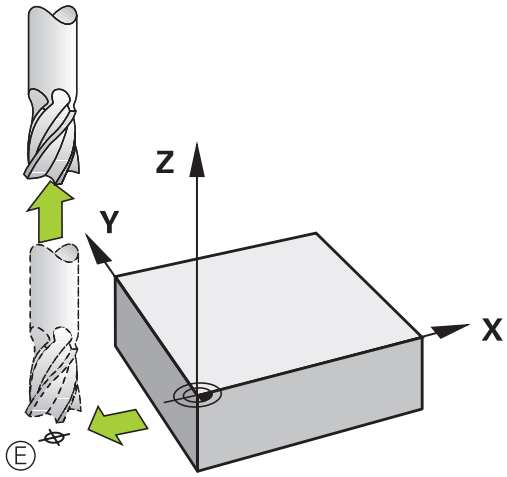

Common starting and end points

Do not program any radius compensation if the starting point and end point are the same.

In order to make sure the contour will not be damaged, the optimal starting point should lie between the extended tool paths for machining the first and last contour elements.

Example in the figure on the right:
If you set the end point in the dark gray area, the contour will be damaged when the contour is approached/departed.

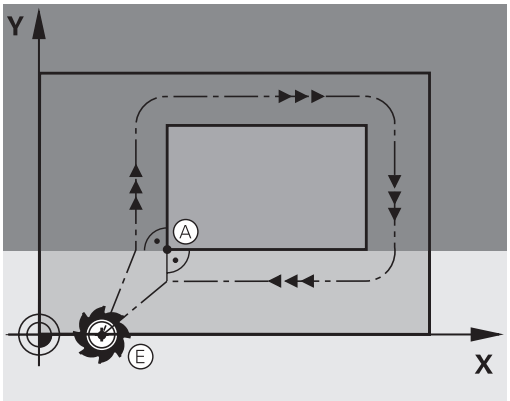

Tangential approach and departure

With **G26** (figure at center right), you can program a tangential approach to the workpiece, and with **G27** (figure at lower right) a tangential departure. In this way you can avoid dwell marks.

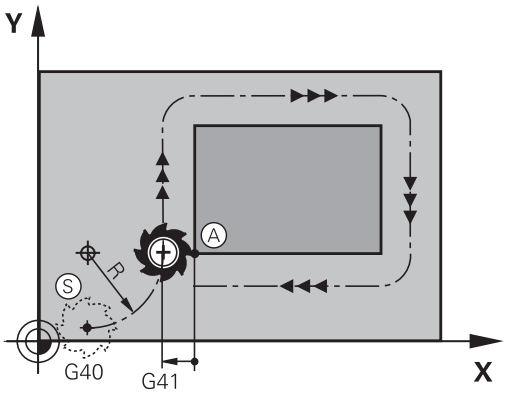

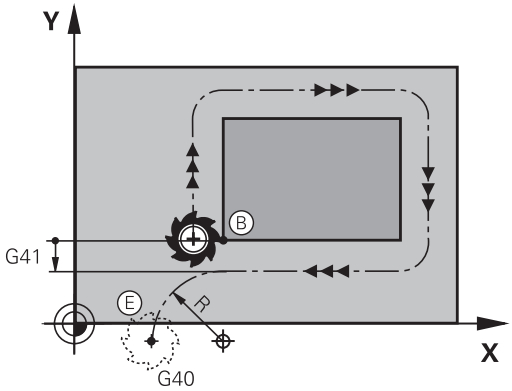

Starting point and end point

The starting point and the end point lie outside the workpiece, close to the first and last contour points. They are to be programmed without radius compensation.

Approach

- **G26** is entered after the block in which the first contour element is programmed: This will be the first block with radius compensation **G41/G42**

Departure

- **G27** after the block in which the last contour element is programmed: This will be the last block with radius compensation **G41/G42**

> The radius for **G26** and **G27** must be selected so that the TNC can execute the circular path between the starting point and the first contour point, as well as the last contour point and the end point.

Example NC blocks

N50 G00 G40 G90 X-30 Y+50 *	Starting point
N60 G01 G41 X+0 Y+50 F350 *	First contour point
N70 G26 R5 *	Tangential approach with radius R = 5 mm
. . .	
PROGRAM CONTOUR BLOCKS	
. . .	Last contour point
N210 G27 R5 *	Tangential departure with radius R = 5 mm
N220 G00 G40 X-30 Y+50 *	End point

Overview: Types of paths for contour approach and departure

The functions for contour approach **APPR** and departure **DEP** are activated with the **APPR/DEP** key. You can then select the following path forms with the corresponding soft keys:

Approach	Departure	Function
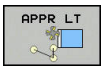	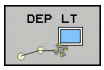	Straight line with tangential connection
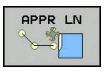	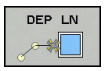	Straight line perpendicular to a contour point
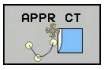	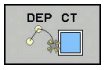	Circular arc with tangential connection
		Circular arc with tangential connection to the contour. Approach and departure to an auxiliary point outside the contour on a tangentially connecting line

Approaching and departing a helix

The tool approaches and departs a helix on its extension by moving in a circular arc that connects tangentially to the contour. You program helical approach and departure with the **APPR CT** and **DEP CT** functions.

Important positions for approach and departure

- Starting point P_S
  You program this position in the block before the APPR block. P_S lies outside the contour and is approached without radius compensation (G40).
- Auxiliary point P_H
  Some of the paths for approach and departure go through an auxiliary point P_H that the TNC calculates from your input in the APPR or DEP block. The TNC moves from the current position to the auxiliary point P_H at the feed rate last programmed. If you have programmed **G00** (positioning at rapid traverse) in the last positioning block before the approach function, the TNC also approaches the auxiliary point P_H at rapid traverse.
- First contour point $P_A$and last contour point P_E
  You program the first contour point P_A in the APPR block. The last contour point $P_E$can be programmed with any path function. If the APPR block also includes the Z coordinate, then the TNC moves the tool simultaneously to the first contour point P_A.
- End point P_N

  The position P_N lies outside of the contour and results from your input in the DEP block. If the DEP block also includes the Z coordinate, then the TNC moves the tool simultaneously to the end point P_N.

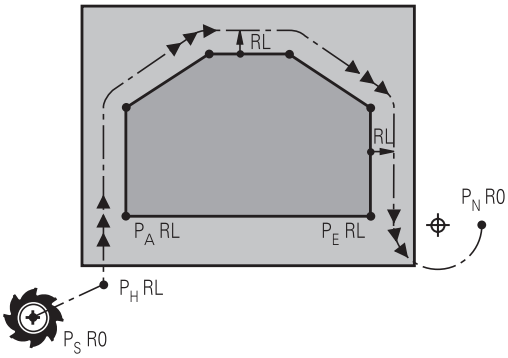

R0=G40; RL=G41; RR=G42

Abbreviation	Meaning
APPR	Approach
DEP	Departure
L	Line
C	Circle
T	Tangential (smooth connection)
N	Normal (perpendicular)

The TNC does not check whether the programmed contour will be damaged when moving from the actual position to the auxiliary point P_H. Use the test graphics to check.

With the **APPR LT**, **APPR LN** and **APPR CT** functions, the TNC moves the tool from the actual position to the auxiliary point P_H at the feed rate that was last programmed. With the **APPR LCT** function, the TNC moves to the auxiliary point P_H at the feed rate programmed with the APPR block. If no feed rate is programmed before the approach block, the TNC generates an error message.

Polar coordinates

You can also program the contour points for the following approach/departure functions over polar coordinates:

- APPR LT becomes APPR PLT
- APPR LN becomes APPR PLN
- APPR CT becomes APPR PCT
- APPR LCT becomes APPR PLCT
- DEP LCT becomes DEP PLCT

Select an approach or departure function with the soft key, then press the orange **P** key.

Radius compensation

The tool radius compensation is programmed together with the first contour point P_A in the APPR block. The DEP blocks automatically discard the tool radius compensation.

If you program **APPR LN** or **APPR CT** with **G40**, the control stops the machining/simulation with an error message.

This method of function differs from the iTNC 530 control!

Approaching on a straight line with tangential connection: APPR LT

The tool moves on a straight line from the starting point P_S to an auxiliary point P_H. It then moves to the first contour point P_A on a straight line that connects tangentially to the contour. The auxiliary point P_H is separated from the first contour point P_A by the distance **LEN**.

- Use any path function to approach the starting point P_S
- Initiate the dialog with the **APPR/DEP** key and **APPR LT** soft key

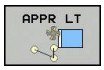

- Coordinates of the first contour point P_A
- **LEN**: Distance from the auxiliary point P_H to the first contour point P_A
- Radius compensation **G41/G42** for machining

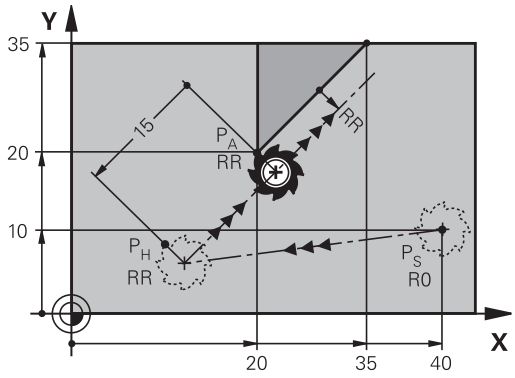

R0=G40; RL=G41; RR=G42

Example NC blocks

N70 G00 X+40 Y+10 G40 M3	Approach P_S without radius compensation
N80 APPR LT X+20 Y+20 Z-10 LEN15 G42 F100	P_A with radius comp. G42, distance P_H to P_A: LEN=15
N90 G01 X+35 Y+35	End point of the first contour element
N100 G01 ...	Next contour element

Approaching on a straight line perpendicular to the first contour point: APPR LN

- Use any path function to approach the starting point P_S.
- Initiate the dialog with the **APPR/DEP** key and **APPR LN** soft key

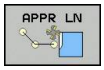

- Coordinates of the first contour point P_A
- Length: Distance to the auxiliary point P_H. Always enter **LEN** as a positive value
- Radius compensation **G41/G42** for machining

Example NC blocks

N70 G00 X+40 Y+10 G40 M3	Approach PS without radius compensation
N80 APPR LN X+10 Y+20 Z-10 LEN15 G24 F100	PA with radius comp. G42
N90 G01 X+20 Y+35	End point of the first contour element
N100 G01 ...	Next contour element

Approaching on a circular path with tangential connection: APPR CT

The tool moves on a straight line from the starting point P_S to an auxiliary point P_H. It then moves from PH to the first contour point PA following a circular arc that is tangential to the first contour element.

The arc from P_H to P_A is determined through the radius R and the center angle **CCA**. The direction of rotation of the circular arc is automatically derived from the tool path for the first contour element.

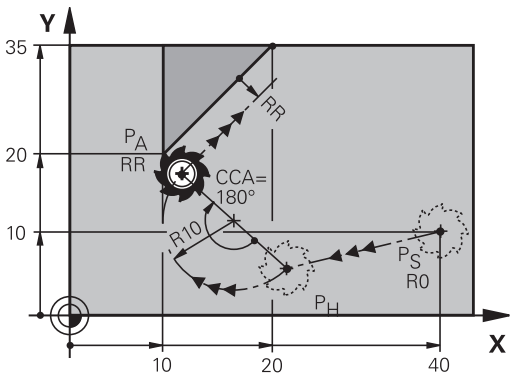

R0=G40; RL=G41; RR=G42

- Use any path function to approach the starting point P_S.
- Initiate the dialog with the **APPR/DEP** key and **APPR CT** soft key

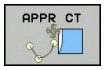

- Coordinates of the first contour point P_A
- Radius R of the circular arc
  - If the tool should approach the workpiece in the direction defined by the radius compensation: Enter R as a positive value
  - If the tool should approach the workpiece opposite to the radius compensation: Enter R as a negative value.
- Center angle **CCA** of the arc
  - CCA can be entered only as a positive value.
  - Maximum input value 360°
- Radius compensation **G41/G42** for machining

Example NC blocks

N70 G00 X+40 Y+10 G40 M3	Approach PS without radius compensation
N80 APPR CT X+10 Y+20 Z-10 CCA180 R+10 G42 F100	PA with radius comp. G42, radius R=10
N90 G01 X+20 Y+35	End point of the first contour element
N100 G01 ...	Next contour element

Approaching on a circular path with tangential connection from a straight line to the contour: APPR LCT

The tool moves on a straight line from the starting point P_S to an auxiliary point P_H. It then moves to the first contour point P_A on a circular arc. The feed rate programmed in the APPR block is effective for the entire path that the TNC traversed in the approach block (path P_S to P_A).

If you have programmed the coordinates of all three principal axes X, Y and Z in the approach block, the TNC moves the tool from the position defined before the APPR block to the auxiliary point P_H on all three axes simultaneously. Then the TNC goes from P_H to P_A only on the working plane.

The arc is connected tangentially both to the line P_S - P_H as well as to the first contour element. Once these lines are known, the radius then suffices to completely define the tool path.

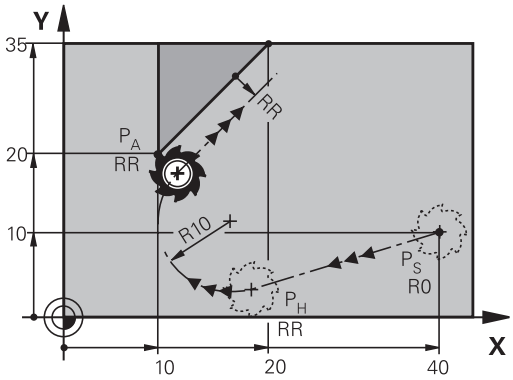

R0=G40; RL=G41; RR=G42

> Please note that earlier programs may need to be adapted.

The arc is connected tangentially both to the line P_S–P_H as well as to the first contour element. Once these lines are known, the radius then suffices to completely define the tool path.

- Use any path function to approach the starting point P_S.
- Initiate the dialog with the **APPR/DEP** key and **APPR LCT** soft key

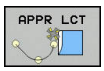

- Coordinates of the first contour point P_A
- Radius R of the circular arc. Enter R as a positive value
- Radius compensation **G41/G42** for machining

Example NC blocks

N70 G00 X+40 Y+10 G40 M3	Approach PS without radius compensation
N80 APPR LCT X+10 Y+20 Z-10 R10 G42 F100	PA with radius comp. G42, radius R=10
N90 G01 X+20 Y+35	End point of the first contour element
N100 G01 ...	Next contour element

Departing in a straight line with tangential connection: DEP LT

The tool moves on a straight line from the last contour point P_E to the end point P_N. The line lies on the extension of the last contour element. P_N is separated from P_E by the distance **LEN**.

- Program the last contour element with the end point P_E and radius compensation
- Initiate the dialog with the **APPR/DEP** key and **DEP LT** soft key

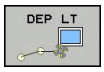

- LEN: Enter the distance from the last contour element P_E to the end point P_N.

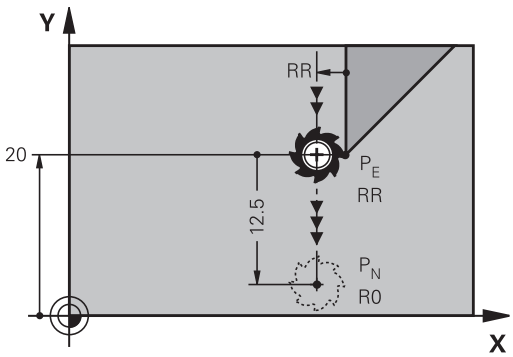

R0=G40; RL=G41; RR=G42

Example NC blocks

N20 G01 Y+20 G42 F100	Last contour element: PE with radius compensation
N30 DEP LT LEN12.5 F100	Depart contour by LEN=12.5 mm
N40 G00 Z+100 M2	Retract in Z, return to block 1, end program

Departing in a straight line perpendicular to the last contour point: DEP LN

The tool moves on a straight line from the last contour point P_E to the end point P_N. The line departs on a perpendicular path from the last contour point P_E. P_N is separated from P_E by the distance **LEN** plus the tool radius.

- Program the last contour element with the end point P_E and radius compensation
- Initiate the dialog with the **APPR/DEP** key and **DEP LN** soft key

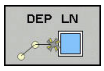

- **LEN**: Enter the distance from the last contour element to P_N. Important: Enter a positive value in **LEN**

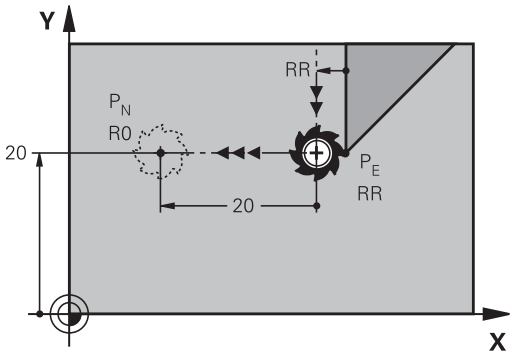

R0=G40; RL=G41; RR=G42

Example NC blocks

N20 G01 Y+20 G42 F100	Last contour element: PE with radius compensation
N30 DEP LN LEN+20 F100	Depart perpendicular to contour by LEN=20 mm
N40 G00 Z+100 M2	Retract in Z, return to block 1, end program

Departing on a circular path with tangential connection: DEP CT

The tool moves on a circular arc from the last contour point P_E to the end point P_N. The circular arc connects tangentially to the last contour element.

- Program the last contour element with the end point P_E and radius compensation
- Initiate the dialog with the **APPR/DEP** key and **DEP CT** soft key

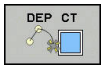

- Center angle **CCA** of the arc
- Radius R of the circular arc
  - If the tool should depart the workpiece in the direction opposite to the radius compensation: Enter R as a positive value.
  - If the tool should depart the workpiece in the direction **opposite** to the radius compensation: Enter R as a negative value.

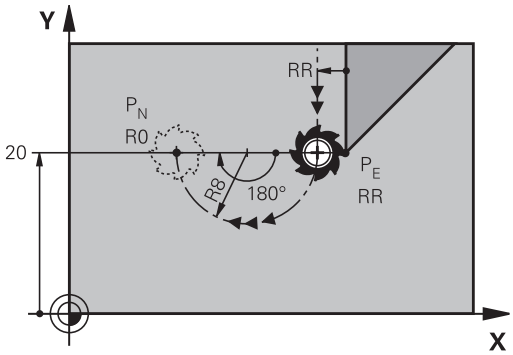

R0=G40; RL=G41; RR=G42

Example NC blocks

N20 G01 Y+20 G42 F100	Last contour element: PE with radius compensation
N30 DEP CT CCA 180 R+8 F100	Center angle=180°, arc radius=8 mm
N40 G00 Z+100 M2	Retract in Z, return to block 1, end program

Departing on a circular arc tangentially connecting the contour and a straight line: DEP LCT

The tool moves on a circular arc from the last contour point P_E to an auxiliary point P_H. It then moves on a straight line to the end point P_N. The arc is tangentially connected both to the last contour element and to the line from P_H to P_N. Once these lines are known, the radius R suffices to unambiguously define the tool path.

- Program the last contour element with the end point P_E and radius compensation
- Initiate the dialog with the **APPR/DEP** key and **DEP LCT** soft key

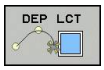

- Enter the coordinates of the end point P_N
- Radius R of the circular arc. Enter R as a positive value

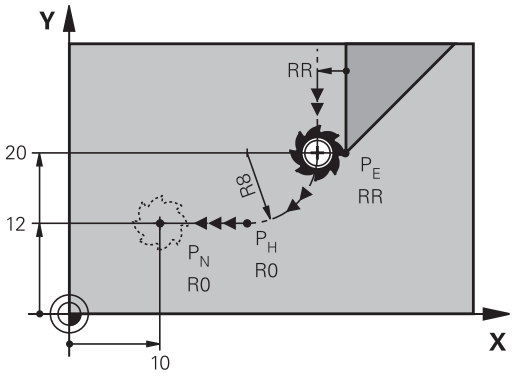

R0=G40; RL=G41; RR=G42

Example NC blocks

N20 G01 Y+20 G42 F100	Last contour element: PE with radius compensation
N30 DEP LCT X+10 Y+12 R+8 F100	Coordinates PN, arc radius=8 mm
N40 G00 Z+100 M2	Retract in Z, return to block 1, end program

6.4 Path contours — Cartesian coordinates

Overview of path functions

Path function key	Function	Tool movement	Required input	Page
L	Straight line **L** **G00** and **G01**	Straight line	Coordinates of the end point of the straight line	225
CHF	Chamfer: **CHF** **G24**	Chamfer between two straight lines	Chamfer side length	226
	Circle center **CC** **I** and **J**	None	Coordinates of the circle center or pole	228
C	Circular arc **C** **G02** and **G03**	Circular arc around a circle center CC to an arc end point	Coordinates of the arc end point, direction of rotation	229
CR	Circular arc **CR** **G05**	Circular arc with a certain radius	Coordinates of the arc end point, arc radius, direction of rotation	230
CT	Circular arc **CT** **G06**	Circular arc with tangential connection to the preceding and subsequent contour elements	Coordinates of the arc end point	232
RND	Corner rounding **RND** **G25**	Circular arc with tangential connection to the preceding and subsequent contour elements	Rounding radius R	227
FK	**FK** free contour programming	Straight line or circular path with any connection to the preceding contour element	"Path contours – FK free contour programming ", page 243	246

Programming path functions

You can program path functions conveniently by using the gray path function keys. In further dialogs, you are prompted by the TNC to make the required entries.

> If you enter DIN/ISO functions via a connected USB keyboard, make sure that capitalization is active.
>
> At the start of the block the control automatically writes in capitals.

Straight line in rapid traverse G00 or straight line with feed rate F G01

The TNC moves the tool in a straight line from its current position to the straight-line end point. The starting point is the end point of the preceding block.

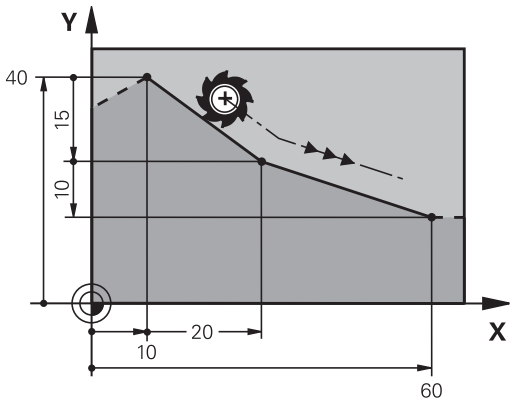

- Press the **L** key to open a program block for a linear movement
- Press the left arrow key to switch to the input range for G codes
- Press the **G00** soft key if you want to enter a rapid traverse motion
- **Coordinates** of the end point of the straight line, if necessary
- **Radius compensation G40/G41/G42**
- **Feed rate F**
- **Miscellaneous function M**

Movement at rapid traverse

You can also use the **L** key to create a straight line block for a rapid traverse movement (**G00** block):

- Press the **L** key to open a program block for a linear movement
- Press the left arrow key to switch to the input range for G codes
- Press the **G00** soft key if you want to enter a rapid traverse motion

Example NC blocks

```
N70 G01 G41 X+10 Y+40 F200 M3 *
N80 G91 X+20 Y-15 *
N90 G90 X+60 G91 Y-10 *
```

Capture actual position

You can also generate a straight-line block (**G01** block) by using the **ACTUAL-POSITION-CAPTURE** key:

- In the Manual Operation mode, move the tool to the position you want to capture
- Switch the screen display to programming.
- Select the program block after which you want to insert the straight line block

- Press the **ACTUAL-POSITION-CAPTURE** key: The TNC generates a straight line block with the actual position coordinates.

Inserting a chamfer between two straight lines

The chamfer enables you to cut off corners at the intersection of two straight lines.

- The line blocks before and after the **G24** block must be in the same working plane as the chamfer.
- The radius compensation before and after the **G24** block must be the same
- The chamfer must be machinable with the current tool

- **Chamfer side length**: Length of the chamfer, and if necessary:
- **Feed rate F** (effective only in **G24** block)

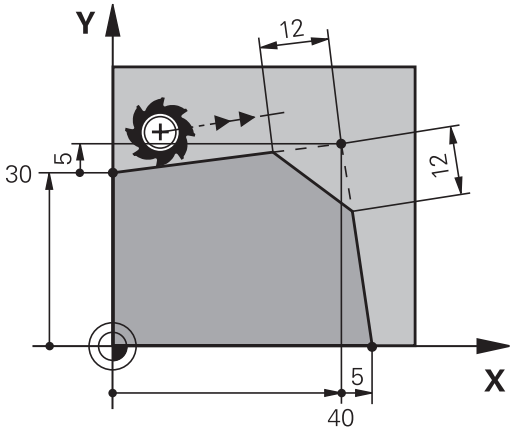

Example NC blocks

```
N70 G01 G41 X+0 Y+30 F300 M3 *
N80 X+40 G91 Y+5 *
N90 G24 R12 F250 *
N100 G91 X+5 G90 Y+0 *
```

You cannot start a contour with a **G24** block.

A chamfer is possible only in the working plane.

The corner point is cut off by the chamfer and is not part of the contour.

A feed rate programmed in the **G24** block is effective only in that CHF block. After the **G24** block, the previous feed rate becomes effective again.

Rounded corners G25

The **G25** function rounds off contour corners.

The tool moves on an arc that is tangentially connected to both the preceding and subsequent contour elements.

The rounding arc must be machinable with the called tool.

- **Rounding radius**: Enter the radius, and if necessary:
- **Feed rate F** (effective only in the **G25** block)

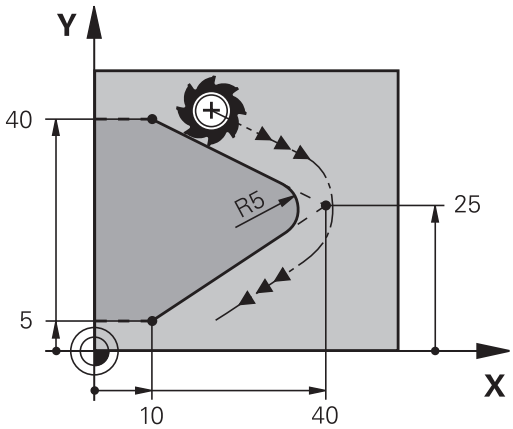

Example NC blocks

```
N50 G01 X+10 Y+40 G41 F300 M3*
N60 G01 X+40 Y+25*
N70 G25 R5 F100*
N80 G01 X+10 Y+5*
```

In the preceding and subsequent contour elements, both coordinates must lie in the plane on which the corners are being rounded. If you machine the contour without tool-radius compensation, you must program both coordinates in the working plane.

The corner point is cut off by the rounding arc and is not part of the contour.

A feed rate programmed in the **G25** block is effective only in that **G25** block. After the **RNDG25** block, the previous feed rate becomes effective again.

You can also use an **G25** block for a tangential contour approach.

Circle center I, J

You can define a circle center for circles that you have programmed with the **G02**, **G03** or **G05** function. This is done in the following ways:

- Entering the Cartesian coordinates of the circle center in the working plane, or
- Using the circle center defined in an earlier block, or
- Capturing the coordinates with the **ACTUAL-POSITION CAPTURE** key

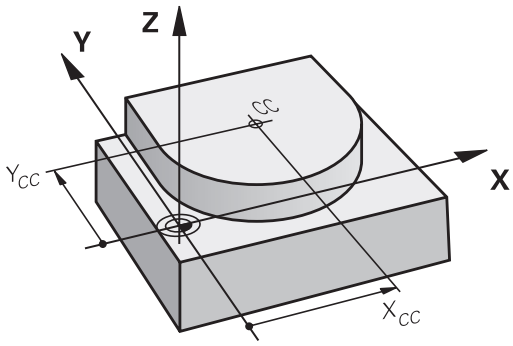

SPEC FCT

- To program the circle center, press the **SPEC FCT** key
- Press the **PROGRAM FUNCTIONS** soft key
- Press the **ISO** soft key
- Press the **I** or **J** soft key
- Enter coordinates for the circle center or, if you want to use the last programmed position, **G29** coordinates

Example NC blocks

```
N50 I+25 J+25 *
```

or

```
N10 G00 G40 X+25 Y+25 *
N20 G29 *
```

The program lines 10 and 20 do not refer to the illustration.

Validity

The circle center definition remains in effect until a new circle center is programmed.

Entering the circle center incrementally

If you enter the circle center with incremental coordinates, you have programmed it relative to the last programmed position of the tool.

> The only effect of **I** and **J** is to define a position as a circle center the tool does not move to the position.
>
> The circle center is also the pole for polar coordinates.

Circular path C around circle center CC

Before programming a circular arc, you must first enter the circle center **I, J**. The last programmed tool position will be the starting point of the arc.

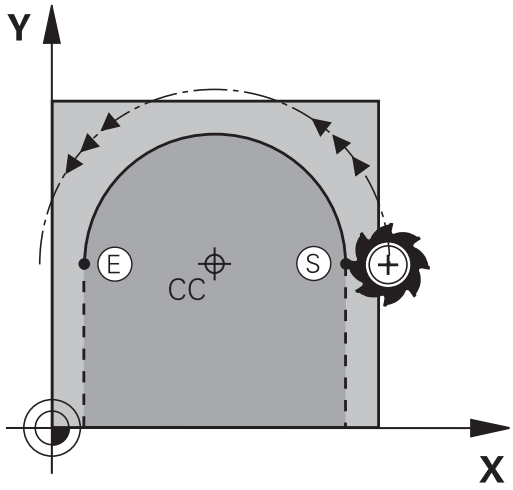

Direction of rotation

- In clockwise direction: **G02**
- In counterclockwise direction: **G03**
- Without programmed direction: **G05**. The TNC traverses the circular arc with the last programmed direction of rotation
- Move the tool to the circle starting point

J

I

- **Enter the coordinates** of the circle center

C

- Enter the **coordinates** of the arc end point, and if necessary:
- **Feed rate F**
- **Miscellaneous function M**

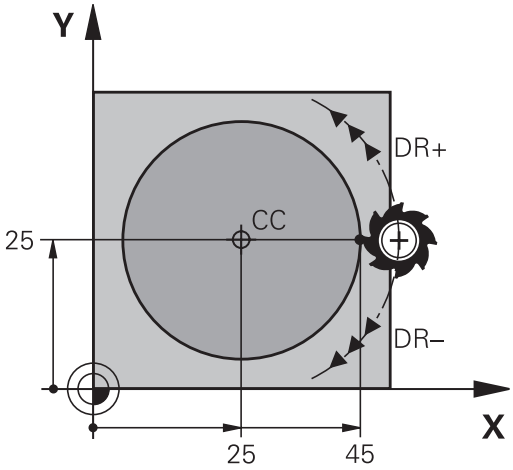

The TNC normally makes circular movements in the active working plane. If you program circular arcs that do not lie in the active working plane, e.g.**G2 Z... X...** with a tool axis Z, and at the same time rotate this movement, then the TNC moves the tool in a spatial arc, which means a circular arc in 3 axes (software option 8).

Example NC blocks

```
N50 I+25 J+25 *
N60 G01 G42 X+45 Y+25 F200 M3 *
N70 G03 X+45 Y+25 *
```

Full circle

For the end point, enter the same point that you used for the starting point.

The starting and end points of the arc must lie on the circle.

The maximum value for input tolerance is 0.016 mm. Set the input tolerance in the **circleDeviation** (no. 200901) machine parameter.

Smallest possible circle that the TNC can traverse: 0.0016 mm.

CircleG02/G03/G05 with defined radius

The tool moves on a circular path with the radius R.

Direction of rotation

- In clockwise direction: **G02**
- In counterclockwise direction: **G03**
- Without programmed direction: **G05**. The TNC traverses the circular arc with the last programmed direction of rotation

- **Coordinates** of the arc end point
- **Radius R** (the algebraic sign determines the size of the arc)
- **Miscellaneous function M**
- **Feed rate F**

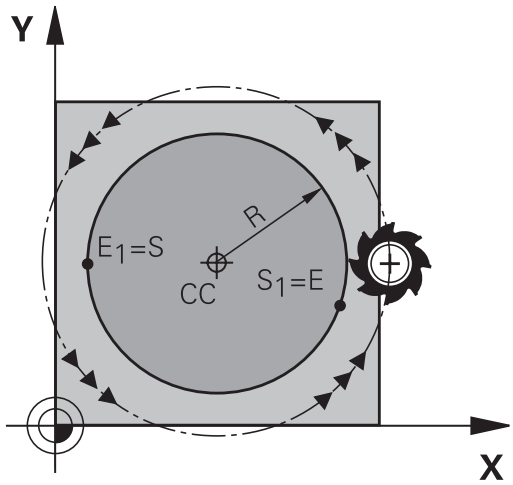

Full circle

For a full circle, program two blocks in succession:

The end point of the first semicircle is the starting point of the second. The end point of the second semicircle is the starting point of the first.

Central angle CCA and arc radius R

The starting and end points on the contour can be connected with four arcs of the same radius:

Smaller arc: CCA<180°

Enter the radius with a positive sign R>0

Larger arc: CCA>180°
Enter the radius with a negative sign R<0

The direction of rotation determines whether the arc is curving outward (convex) or curving inward (concave):

Convex: Direction of rotation **G02** (with radius compensation **G41**)

Concave: Direction of rotation **G03** (with radius compensation **G41**)

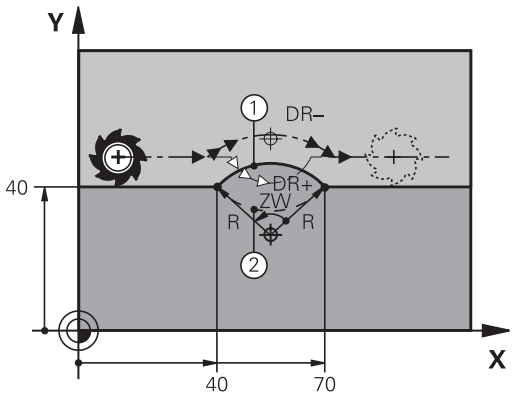

> The distance from the starting and end points of the arc diameter cannot be greater than the diameter of the arc.
>
> The maximum radius is 99.9999 m.
>
> You can also enter rotary axes A, B and C.

Example NC blocks

```
N100 G01 G41 X+40 Y+40 F200 M3 *
N110 G02 X+70 Y+40 R+20 * (ARC 1)
```

or

```
N110 G03 X+70 Y+40 R+20 * (ARC 2)
```

or

```
N110 G02 X+70 Y+40 R-20 * (ARC 3)
```

or

```
N110 G03 X+70 Y+40 R-20 * (ARC 4)
```

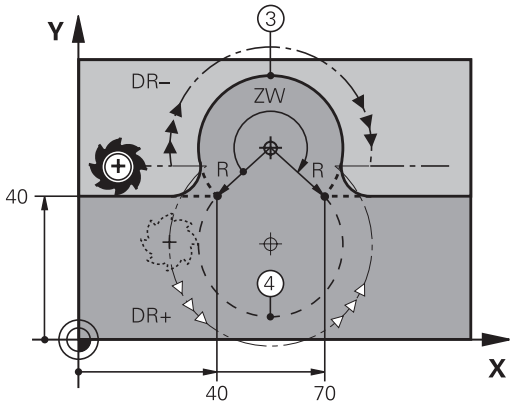

Circle G06 with tangential connection

The tool moves on an arc that starts tangentially to the previously programmed contour element.

A transition between two contour elements is called tangential when there is no kink or corner at the intersection between the two contours—the transition is smooth.

The contour element to which the tangential arc connects must be programmed immediately before the **G06** block. This requires at least two positioning blocks.

- **Coordinates** of the arc end point, and if necessary:
- **Feed rate F**
- **Miscellaneous function M**

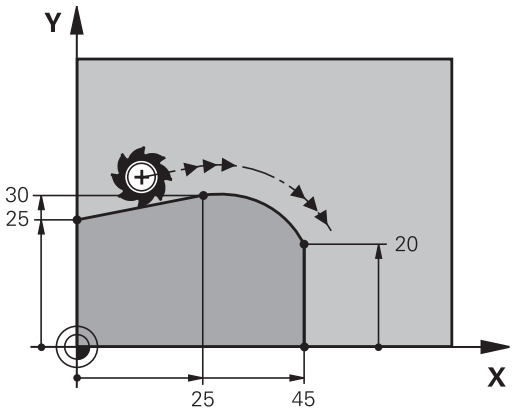

Example NC blocks

```
N70 G01 G41 X+0 Y+25 F300 M3 *
N80 X+25 Y+30 *
N90 G06 X+45 Y+20 *
G01 Y+0 *
```

A tangential arc is a two-dimensional operation: the coordinates in the **G06** block and in the contour element preceding it must be in the same plane of the arc!

Example: Linear movements and chamfers with Cartesian coordinates

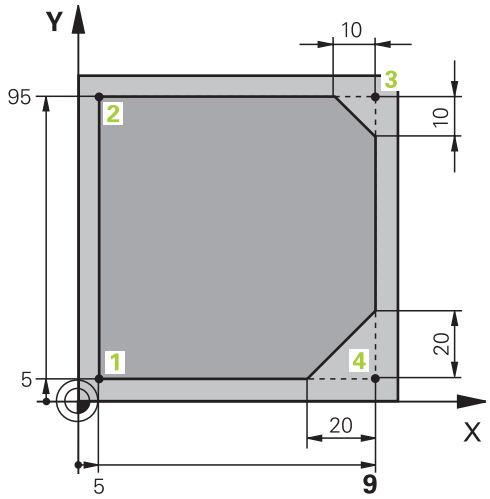

%LINEAR G71 *	
N10 G30 G17 X+0 Y+0 Z-20 *	Define the workpiece blank for graphic workpiece simulation
N20 G31 G90 X+100 Y+100 Z+0 *	
N30 T1 G17 S4000 *	Call the tool in the spindle axis and with the spindle speed S
N40 G00 G40 G90 Z+250 *	Retract the tool in the spindle axis at rapid traverse
N50 X-10 Y-10 *	Pre-position the tool
N60 G01 Z-5 F1000 M3 *	Move to working depth at feed rate F = 1000 mm/min
N70 G01 G41 X+5 Y+5 F300 *	Approach the contour at point 1, activate radius compensation G41
N80 G26 R5 F150 *	Tangential approach
N90 Y+95 *	Move to point 2
N100 X+95 *	Point 3: first straight line for corner 3
N110 G24 R10 *	Program a chamfer with length 10 mm
N120 Y+5 *	Point 4: 2nd straight line for corner 3, 1st straight line for corner 4
N130 G24 R20 *	Program a chamfer with length 20 mm
N140 X+5 *	Move to last contour point 1, second straight line for corner 4
N150 G27 R5 F500 *	Tangential exit
N160 G40 X-20 Y-20 F1000 *	Retract the tool in the working plane, cancel radius compensation
N170 G00 Z+250 M2 *	Retract the tool, end program
N99999999 %LINEAR G71 *	

Example: Circular movements with Cartesian coordinates

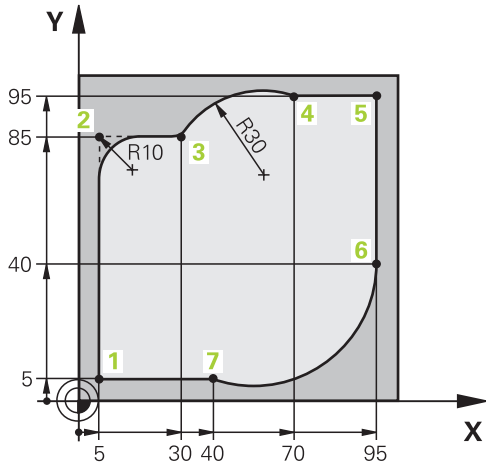

%CIRCULAR G71 *	
N10 G30 G17 X+0 Y+0 Z-20 *	Define the workpiece blank for graphic workpiece simulation
N20 G31 G90 X+100 Y+100 Z+0 *	
N30 T1 G17 S4000 *	Call the tool in the spindle axis and with the spindle speed S
N40 G00 G40 G90 Z+250 *	Retract the tool in the spindle axis at rapid traverse
N50 X-10 Y-10 *	Pre-position the tool
N60 G01 Z-5 F1000 M3 *	Move to working depth at feed rate F = 1000 mm/min
N70 G01 G41 X+5 Y+5 F300 *	Approach the contour at point 1, activate radius compensation G41
N80 G26 R5 F150 *	Tangential approach
N90 Y+85 *	Point 2: First straight line for corner 2
N100 G25 R10 *	Insert radius with R = 10 mm, feed rate: 150 mm/min
N110 X+30 *	Move to point 3: Starting point of the arc
N120 G02 X+70 Y+95 R+30 *	Move to point 4: End point of the arc with G02, radius 30 mm
N130 G01 X+95 *	Move to point 5
N140 Y+40 *	Move to point 6
N150 G06 X+40 Y+5 *	Move to point 7: End point of the arc, circular arc with tangential connection to point 6, TNC automatically calculates the radius
N160 G01 X+5 *	Move to last contour point 1
N170 G27 R5 F500 *	Depart the contour on a circular arc with tangential connection
N180 G40 X-20 Y-20 F1000 *	Retract the tool in the working plane, cancel radius compensation
N190 G00 Z+250 M2 *	Retract the tool in the tool axis, end of program
N99999999 %CIRCULAR G71 *	

Example: Full circle with Cartesian coordinates

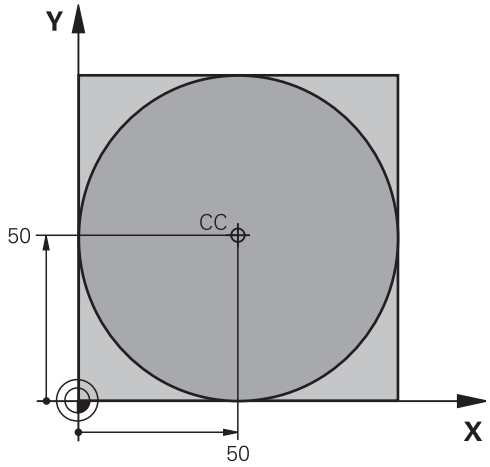

%C-CC G71 *	
N10 G30 G17 X+0 Y+0 Z-20 *	Definition of workpiece blank
N20 G31 G90 X+100 Y+100 Z+0 *	
N30 T1 G17 S3150 *	Tool call
N40 G00 G40 G90 Z+250 *	Retract the tool
N50 I+50 J+50 *	Define the circle center
N60 X-40 Y+50 *	Pre-position the tool
N70 G01 Z-5 F1000 M3 *	Move to working depth
N80 G41 X+0 Y+50 F300 *	Approach starting point, radius compensation G41
N90 G26 R5 F150 *	Tangential approach
N100 G02 X+0 *	Move to the circle end point (= circle starting point)
N110 G27 R5 F500 *	Tangential exit
N120 G01 G40 X-40 Y-50 F1000 *	Retract the tool in the working plane, cancel radius compensation
N130 G00 Z+250 M2 *	Retract the tool in the tool axis, end of program
N99999999 %C-CC G71 *	

6.5 Path contours – Polar coordinates

Overview

With polar coordinates you can define a position in terms of its angle **H** and its distance **R** relative to a previously defined pole **I, J**.

Polar coordinates are useful with:

- Positions on circular arcs
- Workpiece drawing dimensions in degrees, e.g. bolt hole circles

Overview of path functions with polar coordinates

Path function key	Tool movement	Required input	Page
L + P	Straight line	Polar radius, polar angle of the straight-line end point	237
C + P	Circular path around circle center/pole to arc end point	Polar angle of the arc end point,	238
CR + P	Circular path corresponding to active direction of rotation	Polar angle of the circle end point	238
CT + P	Circular arc with tangential connection to the preceding contour element	Polar radius, polar angle of the arc end point	238
C + P	Combination of a circular and a linear movement	Polar radius, polar angle of the arc end point, coordinate of the end point in the tool axis	239

Zero point for polar coordinates: pole I, J

You can set the pole (I, J) at any point in the machining program, before indicating points in polar coordinates. Set the pole in the same way as you would program the circle center.

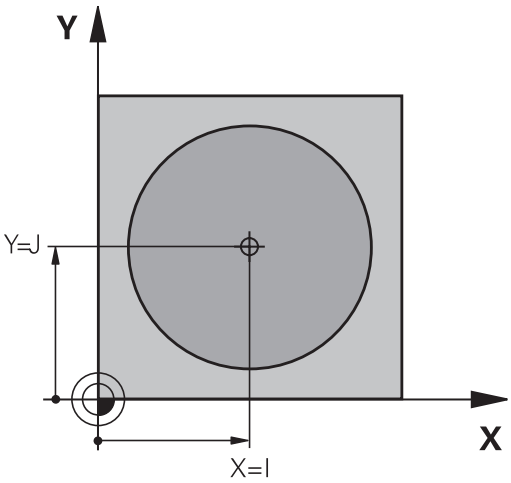

SPEC FCT

- To program a pole, press the SPEC FCT key.
- Press the PROGRAM FUNCTIONS soft key
- Press the DIN/ISO soft key
- Press the I or J soft key
- **Coordinates**: Enter Cartesian coordinates for the pole or, if you want to use the last programmed position, enter **G29**. Before programming polar coordinates, define the pole. You can only define the pole in Cartesian coordinates. The pole remains in effect until you define a new pole.

Example NC blocks

```
N120 I+45 J+45 *
```

Straight line in rapid traverse G10 or straight line with feed rate F G11

The tool moves in a straight line from its current position to the straight-line end point. The starting point is the end point of the preceding block.

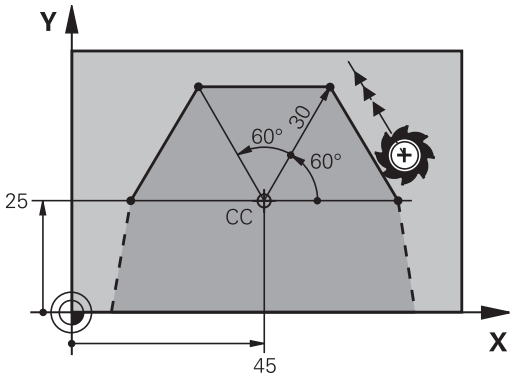

L

- **Polar coordinate radius R**: Enter the distance from the pole CC to the straight-line end point.

P

- **Polar coordinate angle H**: Angular position of the straight-line end point between –360° and +360°

The sign of **H** depends on the angle reference axis:

- If the angle from the angle reference axis to **R** is counterclockwise: **H**>0
- If the angle from the angle reference axis to **R** is clockwise: **H**<0

Example NC blocks

```
N120 I+45 J+45 *
N130 G11 G42 R+30 H+0 F300 M3 *
N140 H+60 *
N150 G91 H+60 *
N160 G90 H+180 *
```

Circular path G12/G13/G15 around pole I, J

The polar coordinate radius **R** is also the radius of the arc. **R** is defined by the distance from the starting point to the pole **I, J**. The last programmed tool position will be the starting point of the arc.

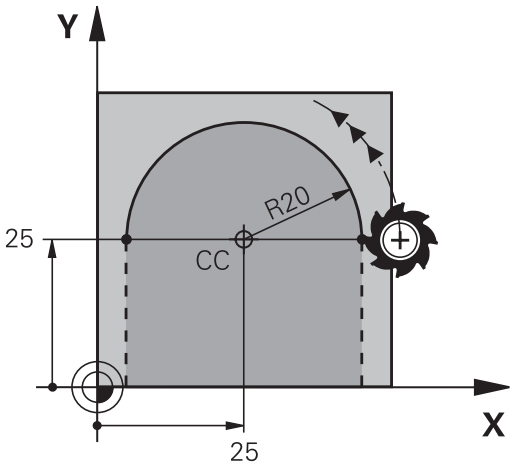

Direction of rotation

- In clockwise direction: **G12**
- In counterclockwise direction: **G13**
- Without programmed direction: **G15**. The TNC traverses the circular arc with the last programmed direction of rotation

- **Polar coordinate angle H**: Angular position of the arc end point between -99999.9999° and +99999.9999°

- **Direction of rotation DR**

Example NC blocks

```
N180 I+25 J+25 *
N190 G11 G42 R+20 H+0 F250 M3 *
N200 G13 H+180 *
```

For incremental coordinates, enter the same sign for DR and PA.

Consider this behavior when importing programs from earlier controls. Adapt the program if required.

Circle G16 with tangential connection

The tool moves on a circular path, starting tangentially from a preceding contour element.

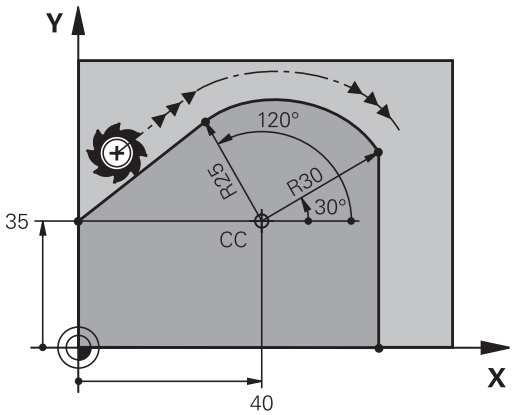

- **Polar coordinate radius R**: Distance between the arc end point and the pole **I, J**

- **Polar coordinate angle H**: Angular position of the arc end point.

The pole is **not** the center of the contour arc!

Example NC blocks

```
N120 I+40 J+35 *
N130 G01 G42 X+0 Y+35 F250 M3 *
N140 G11 R+25 H+120 *
N150 G16 R+30 H+30 *
N160 G01 Y+0 *
```

Helix

A helix is a combination of a circular movement in a main plane and a linear movement perpendicular to this plane. You program the circular path in a main plane.

A helix is programmed only in polar coordinates.

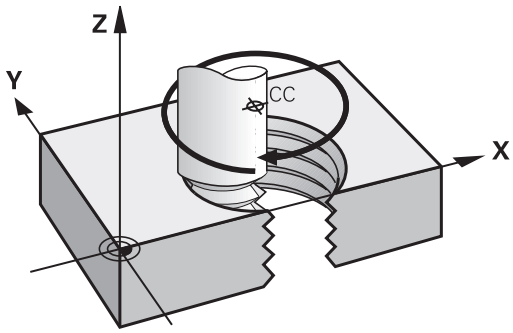

Application

- Large-diameter internal and external threads
- Lubrication grooves

Calculating the helix

To program a helix, you must enter the total angle through which the tool is to move on the helix in incremental dimensions, and the total height of the helix.

Thread revolutions n:	Thread revolutions + overrun at start and end of thread
Total height h:	Thread pitch P times thread revolutions n
Incremental total angle **G91 H**:	Thread revolutions x 360° + angle for beginning of thread + angle for thread overrun
Starting coordinate Z:	Pitch P times (thread revolutions + thread overrun at start of thread)

Shape of the helix

The table below illustrates in which way the shape of the helix is determined by the work direction, direction of rotation and radius compensation.

Internal thread	**Work direction**	**Direction of rotation**	**Radius compensation**
Right-hand	Z+	**G13**	**G41**
Left-hand	Z+	**G12**	**G42**
Right-hand	Z–	**G12**	**G42**
Left-hand	Z–	**G13**	**G41**
External thread			
Right-hand	Z+	**G13**	**G42**
Left-hand	Z+	**G12**	**G41**
Right-hand	Z–	**G12**	**G41**
Left-hand	Z–	**G13**	**G42**

Programming a helix

Always enter the same algebraic sign for the direction of rotation and the incremental total angle **G91 H**. The tool may otherwise move in a wrong path and damage the contour.

For the total angle **G91 H** you can enter a value of -99 999.9999° to +99 999.9999°.

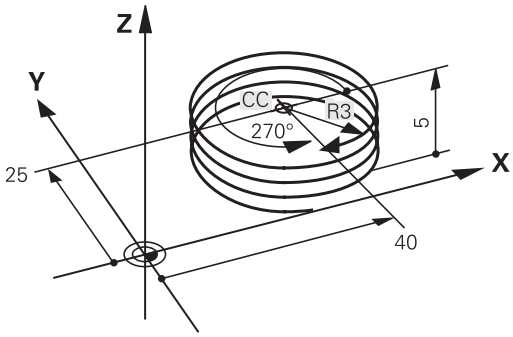

- **Polar coordinates angle:** Enter the total angle of tool traverse along the helix in incremental dimensions. **After entering the angle, specify the tool axis with an axis selection key.**
- **Coordinate**: Enter the coordinate for the height of the helix in incremental dimensions
- **Enter the radius compensation** according to the table

Example NC blocks: Thread M6 x 1 mm with 5 revolutions

```
N120 I+40 J+25 *
N130 G01 Z+0 F100 M3 *
N140 G11 G41 R+3 H+270 *
N150 G12 G91 H-1800 Z+5 *
```

Example: Linear movement with polar coordinates

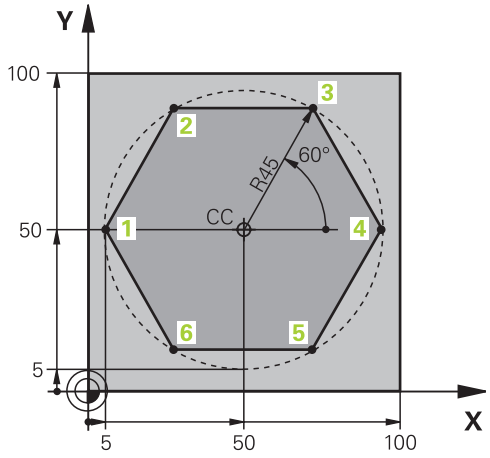

%LINEARPO G71 *	
N10 G30 G17 X+0 Y+0 Z-20 *	Definition of workpiece blank
N20 G31 G90 X+100 Y+100 Z+0 *	
N30 T1 G17 S4000 *	Tool call
N40 G00 G40 G90 Z+250 *	Define the datum for polar coordinates
N50 I+50 J+50 *	Retract the tool
N60 G10 R+60 H+180 *	Pre-position the tool
N70 G01 Z-5 F1000 M3 *	Move to working depth
N80 G11 G41 R+45 H+180 F250 *	Approach the contour at point 1
N90 G26 R5 *	Approach the contour at point 1
N100 H+120 *	Move to point 2
N110 H+60 *	Move to point 3
N120 H+0 *	Move to point 4
N130 H-60 *	Move to point 5
N140 H-120 *	Move to point 6
N150 H+180 *	Move to point 1
N160 G27 R5 F500 *	Tangential exit
N170 G40 R+60 H+180 F1000 *	Retract the tool in the working plane, cancel radius compensation
N180 G00 Z+250 M2 *	Retract in the spindle axis, end of program
N99999999 %LINEARPO G71 *	

Example: Helix

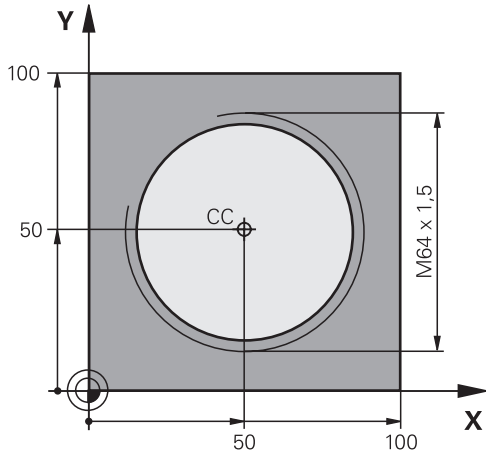

%HELIX G71 *	
N10 G30 G17 X+0 Y+0 Z-20 *	Definition of workpiece blank
N20 G31 G90 X+100 Y+100 Z+0 *	
N30 T1 G17 S1400 *	Tool call
N40 G00 G40 G90 Z+250 *	Retract the tool
N50 X+50 Y+50 *	Pre-position the tool
N60 G29 *	Transfer the last programmed position as the pole
N70 G01 Z-12,75 F1000 M3 *	Move to working depth
N80 G11 G41 R+32 H+180 F250 *	Approach first contour point
N90 G26 R2 *	Connection
N100 G13 G91 H+3240 Z+13.5 F200 *	Helical traverse
N110 G27 R2 F500 *	Tangential exit
N120 G01 G40 G90 X+50 Y+50 F1000 *	Retract the tool, end program
N130 G00 Z+250 M2 *	

6.6 Path contours – FK free contour programming

Fundamentals

Workpiece drawings that are not dimensioned for NC often contain unconventional coordinate data that cannot be entered with the gray dialog keys.

You can enter such dimensional data directly by using the free contour programming function FK, e.g.

- If there are known coordinates on or in the proximity of the contour element
- If coordinate data refers to another contour element
- If directional data and data regarding the course of the contour are known

The TNC derives the contour from the known coordinate data and supports the programming dialog with the interactive FK programming graphics. The upper right figure shows a workpiece drawing for which FK programming is the most convenient programming method.

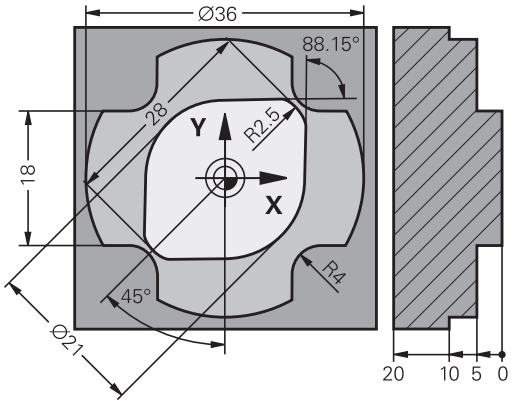

The following prerequisites for FK programming must be observed:

The FK free contour programming feature can only be used for programming contour elements that lie in the working plane.

The working plane for FK programming is defined according to the following hierarchy:

- 1. Using the plane defined in a **FPOL** block
- 2. In the Z/X plane if the FK sequence is run in turning mode
- 3. Using the working plane predefined in the **TOOL CALLT** block (e.g. **G17** = X/Y plane)
- 4. The standard X/Y plane is active if none of these applies

The display of the FK soft keys depends on the spindle axis in the workpiece blank definition. If for example you enter spindle axis **G17** in the workpiece blank definition, the TNC only shows FK soft keys for the X/Y plane.

You must enter all available data for every contour element. Even the data that does not change must be entered in every block—otherwise it will not be recognized.

Q parameters are permissible in all FK elements, except in elements with relative references (e.g. **RX** or **RAN**), i.e. elements that are referenced to other NC blocks.

If both FK blocks and conventional blocks are entered in a program, the FK contour must be fully defined before you can return to conventional programming.

The TNC needs a fixed point from which it can calculate the contour elements. Use the gray path function keys to program a position that contains both coordinates of the working plane immediately before programming the FK contour. Do not enter any Q parameters in this block.

If the first block of an FK contour is an **FCT** or **FLT** block, you must program at least two NC blocks with the gray path function keys to fully define the direction of contour approach.

Do not program an FK contour immediately after an **L** command.

FK programming graphics

> If you wish to use graphic support during FK programming, select the **PROGRAM + GRAPHICS** screen layout.
>
> **Further Information:** Programming, page 78

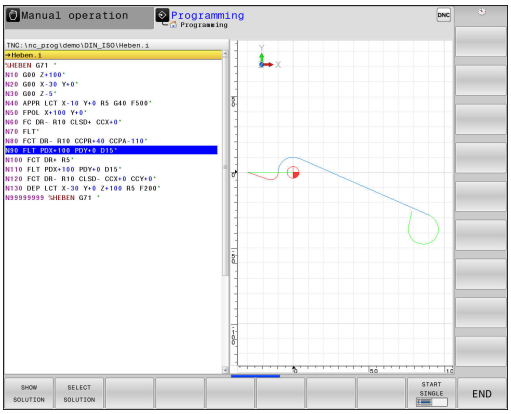

Incomplete coordinate data often is not sufficient to fully define a workpiece contour. In this case, the TNC indicates the possible solutions in the FK graphic. You can then select the contour that matches the drawing. The FK graphic displays the elements of the workpiece contour in different colors:

Blue: The contour element is fully defined

The last FK element is only shown in blue after the departure movement, despite full definition, e.g. via CLSD-.

Green: The entered data describe a limited number of possible solutions: select the correct one

Red: The entered data are not sufficient to determine the contour element: enter further data

If the entered data permit a limited number of possible solutions and the contour element is displayed in green, select the correct contour element as follows:

SHOW SOLUTION

- Press the **SHOW SOLUTION** soft key repeatedly until the correct contour element is displayed. Use the zoom function (2nd soft-key row) if you cannot distinguish possible solutions in the standard setting

SELECT SOLUTION

- If the displayed contour element matches the drawing, select the contour element with **SELECT SOLUTION**

If you do not yet wish to select a green contour element, press the **END SELECT** soft key to continue the FK dialog.

> Select the green contour elements as soon as possible with the **SELECT SOLUTION** soft key. This way you can reduce the ambiguity of subsequent elements.
>
> The machine tool builder may use other colors for the FK graphics.

Showing block numbers in the graphic window

To show a block number in the graphic window:

BLOCK NO. SHOW OMIT

- Set the **SHOW OMIT BLOCK NR.** soft key to **SHOW** (soft-key row 3)

Initiating the FK dialog

If you press the gray FK button, the TNC displays the soft keys you can use to initiate an FK dialog. Press the **FK** button a second time to deselect the soft keys.

If you initiate the FK dialog with one of these soft keys, the TNC shows additional soft-key rows that you can use for entering known coordinates, directional data and data regarding the course of the contour.

Soft key	FK element
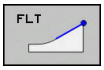	Straight line with tangential connection
	Straight line without tangential connection
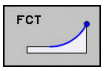	Circular arc with tangential connection
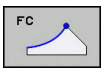	Circular arc without tangential connection
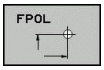	Pole for FK programming

Pole for FK programming

- To display the soft keys for free contour programming, press the **FK** key

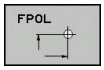

- To initiate the dialog for defining the pole, press the **FPOL** soft key. The TNC then displays the axis soft keys of the active working plane
- Enter the pole coordinates using these soft keys

The pole for FK programming remains active until you define a new one using FPOL.

Free straight line programming

Straight line without tangential connection

- To display the soft keys for free contour programming, press the **FK** key

- To initiate the dialog for free programming of straight lines, press the **FL** soft key. The TNC displays additional soft keys
- Enter all known data in the block by using these soft keys. The FK graphic displays the programmed contour element in red until sufficient data is entered. If the entered data describes several solutions, the graphic will display the contour element in green.
  Further Information: FK programming graphics, page 245

Straight line with tangential connection

If the straight line connects tangentially to another contour element, initiate the dialog with the soft key:

- To display the soft keys for free contour programming, press the **FK** key

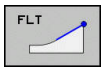

- To initiate the dialog, press the **FLT** soft key
- Enter all known data in the block by using the soft keys

Free circular path programming

Circular arc without tangential connection

- To display the soft keys for free contour programming, press the **FK** key

- To initiate the dialog for free programming of circular arcs, press the **FC** soft key. The TNC displays soft keys with which you can directly enter data on the circular arc or the circle center
- Enter all known data in the block by using these soft keys. The FK graphic displays the programmed contour element in red until sufficient data is entered. If the entered data describes several solutions, the graphic will display the contour element in green.
  Further Information: FK programming graphics, page 245

Circular arc with tangential connection

If the circular arc connects tangentially to another contour element, initiate the dialog with the **FCT** soft key:

- To display the soft keys for free contour programming, press the **FK** key

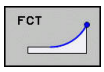

- To initiate the dialog, press the **FCT** soft key
- Enter all known data in the block by using the soft keys

Input options

End point coordinates

Soft keys	Known data
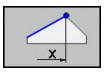 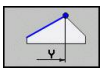	Cartesian coordinates X and Y
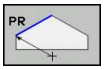 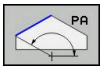	Polar coordinates referenced to FPOL

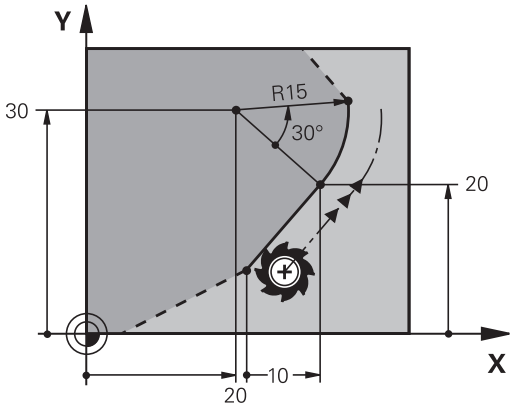

Example NC blocks

```
N70 FPOL X+20 Y+30
N80 FL IX+10 Y+20 G42 F100
N90 FCT PR+15 IPA+30 DR+ R15
```

Direction and length of contour elements

Soft keys	Known data
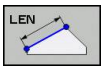	Length of a straight line
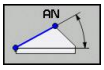	Gradient angle of a straight line
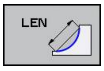	Chord length LEN of an arc
	Gradient angle AN of an entry tangent
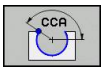	Center angle of an arc

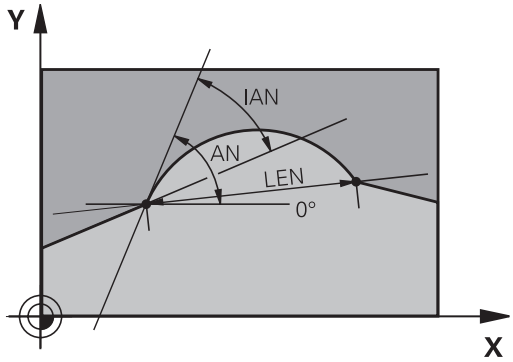

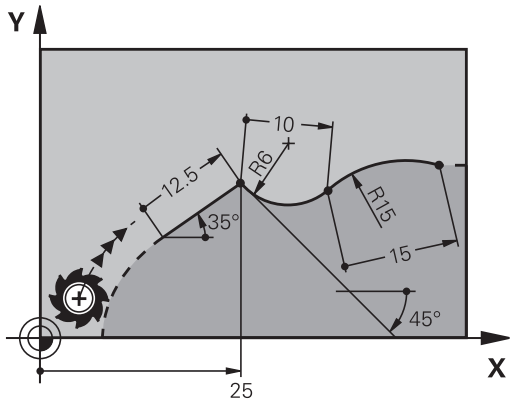

> **!** **Caution: Danger to the workpiece and tool!**
> Gradient angles that you defined incrementally (**IAN**) are referenced to the direction of the last positioning block by the TNC. Programs that contain incremental gradient angles and were created on an iTNC 530 or on earlier TNCs are not compatible.

Example NC blocks

```
N20 FLT X+25 LEN 12.5 AN+35 G41 F200
N30 FC DR+ R6 LEN 10 AN-45
N40 FCT DR- R15 LEN 15
```

Circle center CC, radius and direction of rotation in the FC/FCT block

The TNC calculates a circle center for free-programmed arcs from the data you enter. This makes it possible to program full circles in an FK program block.

If you wish to define the circle center in polar coordinates you must use FPOL, not **CC**, to define the pole. FPOL is entered in Cartesian coordinates and remains in effect until the control encounters a block in which another **FPOL** is defined.

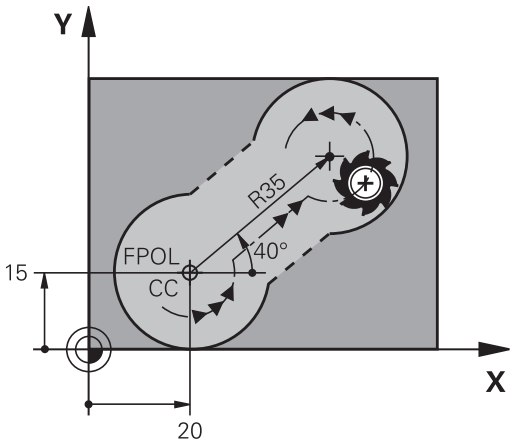

> A circle center that was calculated or programmed conventionally is then no longer valid as a pole or circle center for the new FK contour: If you enter conventional polar coordinates that refer to a pole from a CC block you have defined previously, then you must enter the pole again in a CC block after the FK contour.

Soft keys	Known data
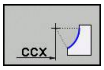 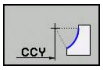	Circle center in Cartesian coordinates
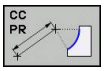 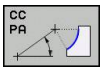	Center point in polar coordinates
	Rotational direction of the arc
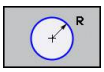	Radius of an arc

Example NC blocks

```
N10 FC CCX+20 CCY+15 DR+ R15
N20 FPOL X+20 Y+15
N30 FL AN+40
N40 FC DR+ R15 CCPR+35 CCPA+40
```

Closed contours

You can identify the beginning and end of a closed contour with the **CLSD** soft key. This reduces the number of possible solutions for the last contour element.

Enter **CLSD** as an addition to another contour data entry in the first and last blocks of an FK section.

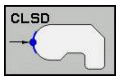

Beginning of contour:	CLSD+
End of contour:	CLSD–

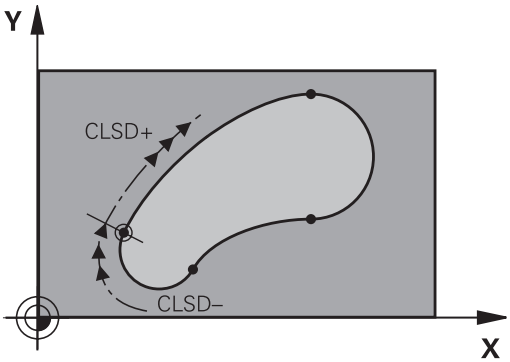

Example NC blocks

```
N10 G01 X+5 Y+35 G41 F500 M3
N20 FC DR- R15 CLSD+ CCX+20 CCY+35
...
N30 FCT DR- R+15 CLSD-
```

Auxiliary points

For both free-programmed straight lines and free-programmed circular arcs, you can enter the coordinates of auxiliary points that are located on the contour or in its proximity.

Auxiliary points on a contour

The auxiliary points are located on the straight line, the extension of the straight line, or on the circular arc.

Soft keys	Known data
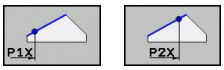	X coordinate of an auxiliary point P1 or P2 of a straight line
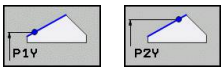	Y coordinate of an auxiliary point P1 or P2 of a straight line
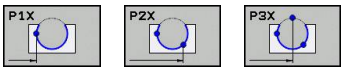	X coordinate of an auxiliary point P1, P2 or P3 of a circular path
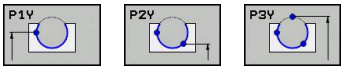	Y coordinate of an auxiliary point P1, P2 or P3 of a circular path

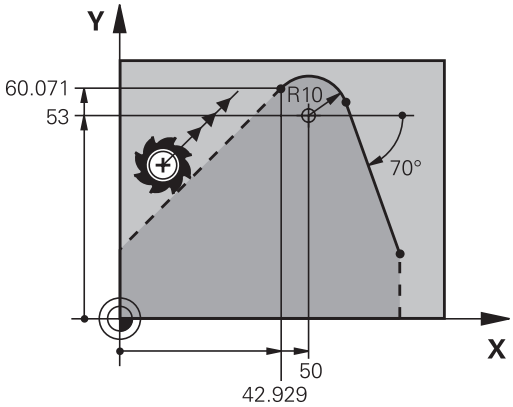

Auxiliary points near a contour

Soft keys	Known data
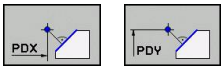	X and Y coordinates of the auxiliary point near a straight line
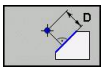	Distance of auxiliary point to straight line
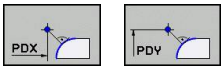	X and Y coordinates of an auxiliary point near a circular arc
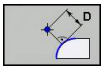	Distance of auxiliary point to circular arc

Example NC blocks

```
N10 FC DR- R10 P1X+42.929 P1Y+60.071
N20 FLT AN-70 PDX+50 PDY+53 D10
```

Relative data

Relative data are values based on another contour element. The soft keys and program words for relative entries begin with the letter **R**. The figure on the right shows the dimensional data that should be programmed as relative data.

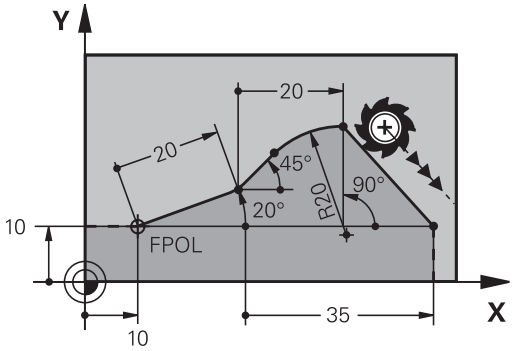

> The coordinates and angles for relative data are always programmed in incremental dimensions. You must also enter the block number of the contour element on which the data is based.
>
> The block number of the contour element on which the relative data is based can only be located up to 64 positioning blocks before the block in which you program the reference.
>
> If you delete a block on which relative data are based, the TNC will display an error message. Change the program first before you delete the block.

Data relative to block N: End point coordinates

Soft keys	Known data
RX N... RY N...	Cartesian coordinates relative to block N
RPR N... RPA N...	Polar coordinates relative to block N

Example NC blocks

```
N10 FPOL X+10 Y+10
N20 FL PR+20 PA+20
N30 FL AN+45
N40 FCT IX+20 DR- R20 CCA+90 RX 20
N50 FL IPR+35 PA+0 RPR 20
```

Data relative to block N: Direction and distance of the contour element

Soft key	Known data
RAN N...	Angle between a straight line and another element or between the entry tangent of the arc and another element
PAR N...	Straight line parallel to another contour element
DP	Distance from a straight line to a parallel contour element

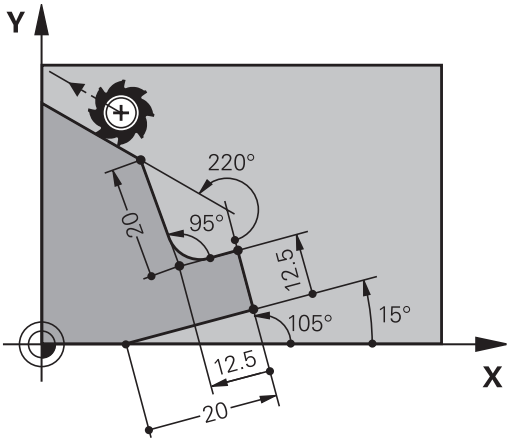

Example NC blocks

```
N10 FL LEN 20 AN+15
N20 FL AN+105 LEN 12.5
N30 FL PAR 10 DP 12.5
N40 FSELECT 2
N50 FL LEN 20 IAN+95
N60 FL IAN+220 RAN 20
```

Data relative to block N: Circle center CC

Soft key	Known data
RCCX N... RCCY N...	Cartesian coordinates of the circle center relative to block N
RCCPR N... RCCPA N...	Polar coordinates of the circle center relative to block N

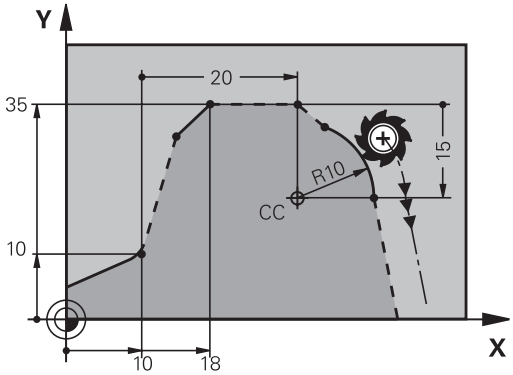

Example NC blocks

```
N10 FL X+10 Y+10 G41
N20 FL ...
N30 FL X+18 Y+35
N40 FL ...
N50 FL ...
N60 FC DR- R10 CCA+0 ICCX+20 ICCY-15 RCCX10 RCCY30
```

Example: FK programming 1

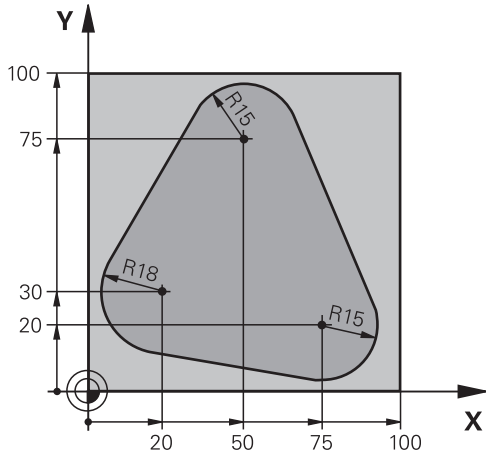

%FK1 G71*	
N10 G30 G17 X+0 Y+0 Z-20*	Definition of workpiece blank
N20 G31 X+100 Y+100 Z+0*	
N30 T 1 G17 S500*	Tool call
N40 G00 G90 Z+250 G40 M3*	Retract the tool
N50 G00 X-20 Y+30 G40*	Pre-positioning the tool
N60 G01 Z-10 G40 F1000*	Move to working depth
N70 APPR CT X+2 Y+30 CCA90 R+5 G41 F250*	Approach the contour on a circular arc with tangential connection
N80 FC DR- R18 CLSD+ CCX+20 CCY+30*	FK contour section:
N90 FLT*	Program all known data for each contour element
N100 FCT DR- R15 CCX+50 CCY+75*	
N110 FLT*	
N120 FCT DR- R15 CCX+75 CCY+20*	
N130 FLT*	
N140 FCT DR- R18 CLSD- CCX+20 CCY+30*	
N150 DEP CT CCA90 R+5 F2000*	Depart the contour on a circular arc with tangential connection
N160 G00 X-30 Y+0*	
N170 G00 Z+250 M2*	Retract the tool, end program
N99999999 %FK1 G71*	

7

Programming: Data Transfer from CAD Files

7.1 CAD viewer and DXF converter screen layout

CAD viewer and DXF converter screen layout

If you open the CAD viewer and DXF converter, the following screen layout is displayed:

Screen display

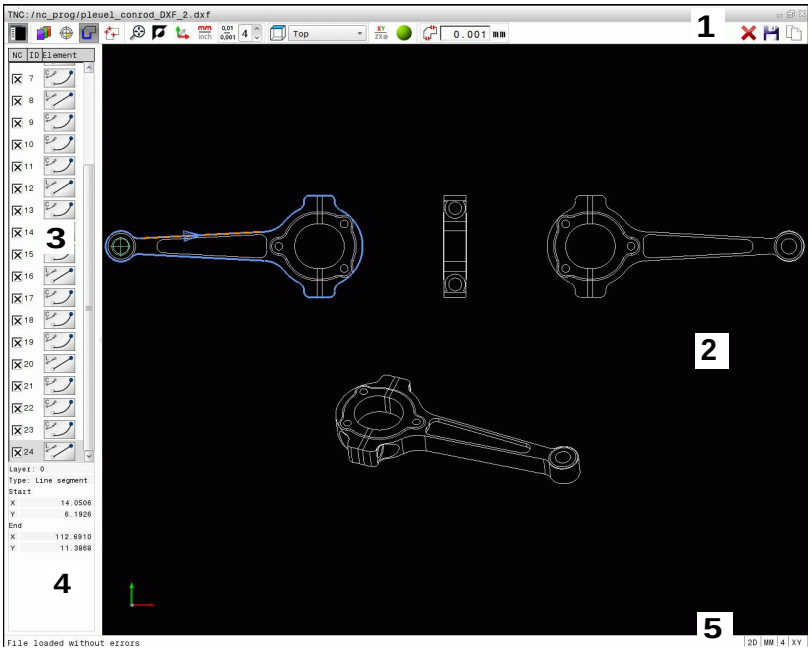

1 Menu bar
2 Graphics window
3 List View window
4 Window element information
5 Status bar

7.2 CAD viewer

Application

The CAD viewer allows you to open standardized CAD data formats directly on the TNC.

The TNC displays the following file formats:

Files	Type
Step	.STP and .STEP
Iges	.IGS and .IGES
DXF	.DXF

The file can simply be selected via the file manager of the TNC, just like NC programs. This allows you to view models quickly and easily.

The datum can be positioned anywhere in the model. Starting from this datum, element information such as centers of circles can be shown.

The following icons are available:

Icon	Setting
	Show or hide the Window List view to expand the Graphics window
	Display of the various layers
	Set the datum or delete set datum
	Set the zoom to the largest possible view of the complete graphics
	Change the background color (black or white)
0,01 ... 0,001	Set resolution: The resolution specifies how many decimal places the TNC will use when generating the contour program. Default setting: 4 decimal places with **mm** and 5 decimal places with **inch**
	Switch between various views of the model e.g. **Top**
	Activate wire frame or shadowing

7.3 DXF converter (option 42)

Application

DXF files can be opened directly by the TNC, in order to extract contours or machining positions, and save them as conversational programs or as point files. Conversational programs acquired in this manner can also be run by older TNC controls, since these contour programs contain only **L** and **CC**/**C** blocks.

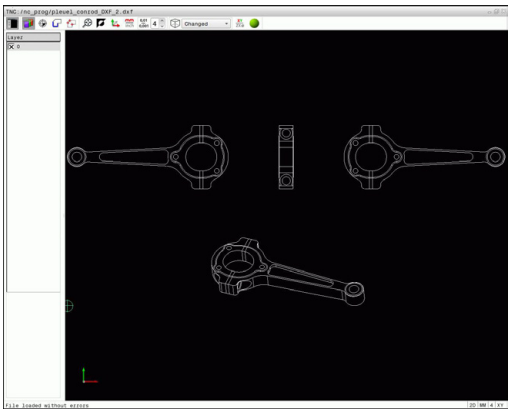

If you process DXF files in **Programming** mode, the TNC generates contour programs with the file extension **.H** and point files with the extension **.PNT** by default. You can choose the desired file type in the save dialog. To add a selected contour or a selected machining position directly in an NC program, use the TNC clipboard.

The file to be processed must be stored on the hard disk of your TNC.

Before loading the file to the TNC, ensure that the name of the file does not contain any blank spaces or impermissible special characters.

Further Information: File names, page 117

The TNC supports the most common DXF format, R12 (equivalent to AC1009).

The TNC does not support binary DXF format. When generating the DXF file from a CAD or drawing program, make sure that you save the file in ASCII format.

Working with the DXF converter

> You cannot use the DXF converter without a mouse or touch pad. All operating modes and functions as well as contours and machining positions can only be selected with the mouse or touch pad.

The DXF converter runs as a separate application on the third desktop of the TNC. This enables you to use the screen switchover key to switch between the machine operating modes, the programming modes and the DXF converter. This is particularly useful if you want to add contours or machining positions by copying using the clipboard in a conversational program.

Opening a DXF file

- Select the **Programming** mode
- Select File functions.
- In order to see the soft key menu for selecting the file types to be displayed, press the **SELECT TYPE** soft key
- In order to show all CAD files, press the **SHOW CAD** soft key
- Select the directory in which the CAD file is saved
- Select the desired CAD file
- Load it with the **ENT** key. The TNC starts the DXF converter and shows the contents of the file on the screen. In the List View window, the TNC shows the layers (planes) and it shows the drawing in the Graphics window

Basic settings

The basic settings specified below are selected using the icons in the toolbar.

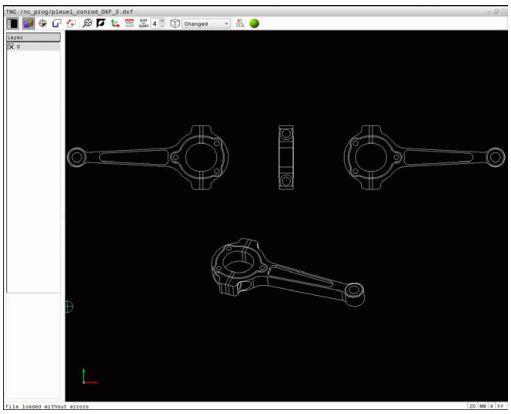

Icon	Setting
	Show or hide the Window List view to expand the Graphics window
	Display of the various layers
	Select the contour
	Select hole positions
	Set datum
	Set the zoom to the largest possible view of the complete graphics
	Change the background color (black or white)
	Switch between 2-D and 3-D mode. The active mode is color-highlighted
mm inch	Set the unit of measure, **mm** or **inch**, for the file. The TNC then outputs the contour program and the machining positions in this unit of measure. The active unit of measure is highlighted in red
0,01 ... 0,001	Set resolution: The resolution specifies how many decimal places the TNC will use when generating the contour program. Default setting: 4 decimal places with **mm** and 5 decimal places with **inch**
	Switch between various views of the model e.g. **Top**
XY ZX⌀	Select a contour for a turning operation. The active machining is color-highlighted (option 50)
	Activate 3-D drawing wire model

The following icons are displayed by the TNC only in certain modes.

Icon	Setting
	Contour assumption mode: The tolerance specifies how far apart neighboring contour elements may be from each other. You can use the tolerance to compensate for inaccuracies that occurred when the drawing was made. The default setting is 0.001 mm
	Point assumption mode: Specify whether the TNC should display the tool path as a dashed straight line during selection of machining positions
	Path optimization mode: The TNC optimizes the tool traverse movement to give the shortest traverse movements between the machining positions. Optimization is reset with repeated actuations
C CR	Arc mode: Arc mode determines whether circles should be produced in C format or CR format, e.g. for cylinder coat interpolations in the NC program.

Please note that you must set the correct unit of measure, since the DXF file does not contain any such information.

If you want to generate programs for older TNC controls, you must limit the resolution to three decimal places. In addition, you must remove the comments that the DXF converter inserts into the contour program.

The TNC displays the active basic settings in the status bar of the screen.

Setting layers

As a rule, DXF files contain multiple layers. The designer uses the layers to create groups of various types of elements, e.g. the actual workpiece contour, dimensions, auxiliary and design lines, shadings, and texts.

So that little unnecessary information appears on the screen during selection of the contours, you can hide all excessive layers contained in the DXF file.

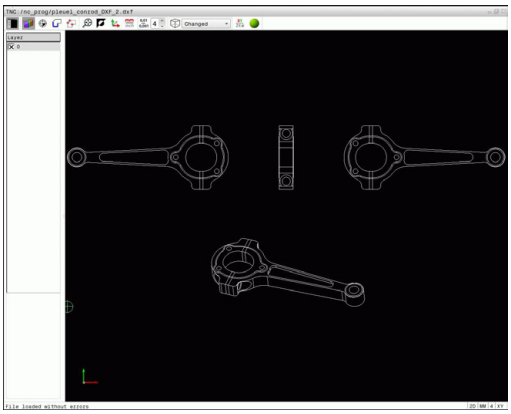

The DXF file to be processed must contain at least one layer. Elements not assigned to a layer are automatically moved by the TNC to the anonymous layer.

You can even select a contour if the designer has saved it on different layers.

- Select the mode for the layer settings: In the List View window the TNC shows all layers contained in the active DXF file
- Hide a layer: Select the layer with the left mouse button, and click its check box to hide it Alternatively, use the space key
- Show a layer: Select the layer with the left mouse button, and click on its check box to show it. Alternatively, use the space key

Setting a datum

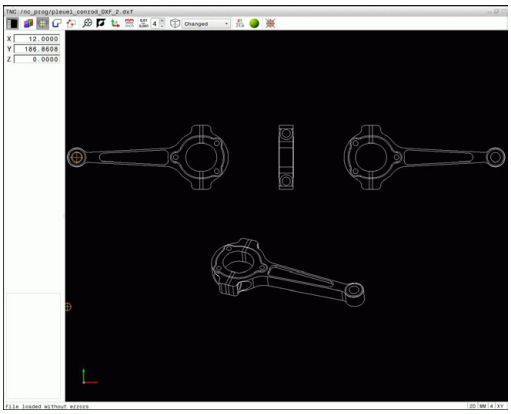

The datum of the drawing for the DXF file is not always located in a manner that lets you use it directly as a datum for the workpiece. Therefore, the TNC has a function with which you can shift the drawing datum to a suitable location by clicking an element.

You can define a datum at the following locations:

- By directly inputting numerical values into the List View window
- At the beginning, end or center of a straight line
- At the beginning, center or end of a circular arc
- At the transition between quadrants or at the center of a complete circle
- At the intersection between:
  - A straight line and a straight line, even if the intersection is actually on the extension of one of the lines
  - Straight line – circular arc
  - Straight line – full circle
  - Circle – circle (regardless of whether a circular arc or a full circle)

> You must use the touchpad or a connected mouse in order to specify a reference point.
>
> You can also change the reference point once you have already selected the contour. The TNC does not calculate the actual contour data until you save the selected contour in a contour program.

Selecting a datum on a single element

- Select the mode for specifying the datum
- Click the desired element with the mouse: The TNC indicates possible locations for datums on the selected element with stars
- Click on the star you want to select as the datum. The TNC sets the datum symbol to the selected location. If the selected element is too small, then use the zoom function.

Selecting a datum on the intersection of two elements

- Select the mode for specifying the datum
- Click the first element (straight line, complete circle or circular arc) with the left mouse button. The TNC indicates possible locations for datums on the selected element with stars. The element is color-highlighted
- Click on the second element (straight line, complete circle or circular arc) with the left mouse button. The TNC sets the datum symbol on the intersection

The TNC calculates the intersection of two elements even if it is on the extension of one of these elements.

If the TNC calculates multiple intersections, it selects the intersection nearest the mouse-click on the second element.

If the TNC cannot calculate an intersection, it rescinds the marking of the element.

If a datum is set, the color of the icon changes Setting a datum.

Delete a datum by clicking on the icon.

Element Information

In the Element Information window, the TNC shows how far the datum you haven chosen is located from the drawing datum.

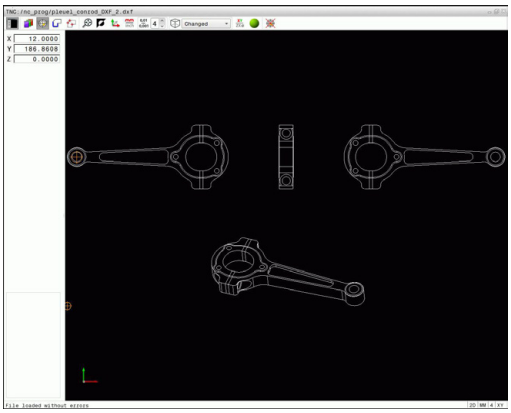

Selecting and saving a contour

> You must use the touchpad on the TNC keyboard or a mouse attached via the USB port in order to select a contour.
>
> Specify the direction of rotation during contour selection so that it matches the desired machining direction.
>
> Select the first contour element such that approach without collision is possible.
>
> If the contour elements are very close to one another, use the zoom function.

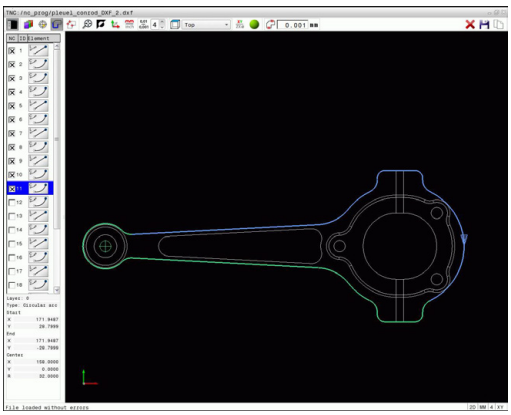

The following DXF elements are selectable as contours:

- LINE (straight line)
- CIRCLE (complete circle)
- ARC (circular arc)
- POLYLINE

Ellipses and splines can be used for intersections but cannot be selected. If you select ellipses or splines, these are displayed in red.

Element information

In the Element Information window the TNC displays a range of information about the last contour element that you highlighted in the List View window or in the Graphics window.

- **Layer**: Indicates the layer you are currently on
- **Type**: Indicates the current element type, e.g. line
- **Coordinates**: Shows the starting point and end point of an element, and circle center and radius where appropriate

- Select the mode for selecting a contour: The Graphics window is active for contour selection
- To select a contour element: Click the desired element with the mouse. The TNC displays the machining sequence as a dashed straight line. Position the mouse on the other side of the center point of an element to modify the machining sequence. Select the element with the left mouse button. The selected contour element turns blue. If further contour elements in the selected machining sequence are selectable, these elements turn green
- If further contour elements in the selected machining sequence are selectable, the TNC highlights these elements in green. With divergences, the element with the lowest angle distance is selected. Click on the last green element to assume all elements into the contour program
- The TNC shows all selected contour elements in the List View window. The TNC displays elements that are still green in the **NC** column without a check mark. The TNC does not save these elements to the contour program. You can also confirm the highlighted elements in the contour program by clicking in the List View window

- If necessary you can also deselect elements that you have selected, by clicking on the element in the Graphics window again, while pressing the **CTRL** key at the same time. You can deselect all selected elements by clicking on the icon

- Save the selected contour elements to the clipboard of the TNC so that you can then insert the contour in a conversational program; or

- To save the selected contour elements in a conversational program, enter any file name and the target directory in the pop-up window displayed by the TNC. Default setting: Name of the DXF file. As an alternative, you can also select the file type: conversational program (**.H**) or contour description (**.HC**)

- Confirm the entry: The TNC saves the contour program to the selected directory

- If you want to select more contours, press the Cancel Selected Elements soft key and select the next contour as described above

The TNC also transfers two workpiece-blank definitions (**BLK FORM**) to the contour program. The first definition contains the dimensions of the entire DFX file. The second one, which is the active one, contains only the selected contour elements, so that an optimized size of the workpiece blank results.

The TNC only saves elements that have actually been selected (blue elements), which means that they have been given a check mark in the List View window.

Dividing, extending and shortening contour elements

Proceed as follows to modify contour elements:

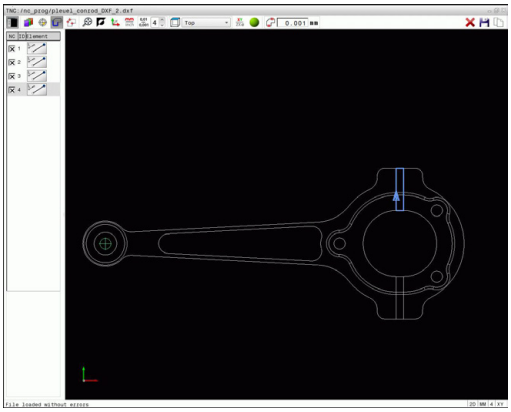

- The Graphics window is active for the contour selection
- To select the starting point: Select an element or the intersection between two elements (with the shift key). A red star is shown as the starting point
- To select the next contour element: Click the desired element with the mouse. The TNC displays the machining sequence as a dashed straight line. When the element is selected the TNC displays it in blue. If the elements cannot be linked, the TNC displays the selected element in gray
- If further contour elements in the selected machining sequence are selectable, the TNC highlights these elements in green. With divergences, the element with the lowest angle distance is selected. Click on the last green element to assume all elements into the contour program

You select the machining sequence of the contour with the first contour element.

If the contour element to be extended or shortened is a straight line, then the TNC extends/shortens the contour element along the same line. If the contour element to be extended or shortened is a circular arc, then the TNC extends/shortens the contour element along the same arc.

Select a contour for a turning operation

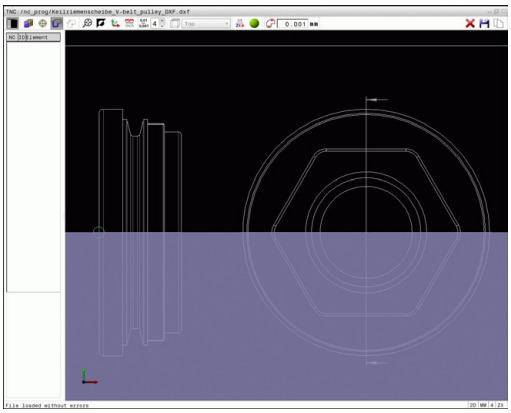

You can also use the DXF converter (option number 50) to select contours for turning. The icon is dimmed if option number 50 is not enabled. Before you enter a turning contour, you must set the datum onto the rotary axis. If you select a turning contour, it is saved with Z and X coordinates. In addition, all X coordinate values in turning contours are transferred as diameter values, i.e. the drawing dimensions for the X axis are doubled. All contour elements below the rotary axis are not selected and are dimmed.

- Select the mode for choosing a turning contour: The TNC shows only the selectable elements above the rotation center
- Select the desired contour elements with the left mouse button: The TNC displays the selected contour elements in blue and shows the selected elements with a symbol (circular or straight) in the List View window

> The icons specified above have identical functions for both milling and turning. Icons not available for turning are disabled.

You can also use the mouse to change the turning graphic display. The following functions are available:

- To shift the model shown: Hold the center mouse button or the wheel button down and move the mouse.
- To zoom in on a certain area: Mark a zoom area by holding the left mouse button down. After you release the left mouse button, the TNC zooms in on the defined area
- To rapidly magnify or reduce any area: Rotate the mouse wheel backwards or forwards
- To return to the standard display: Double-click with the right mouse key

Selecting and saving machining positions

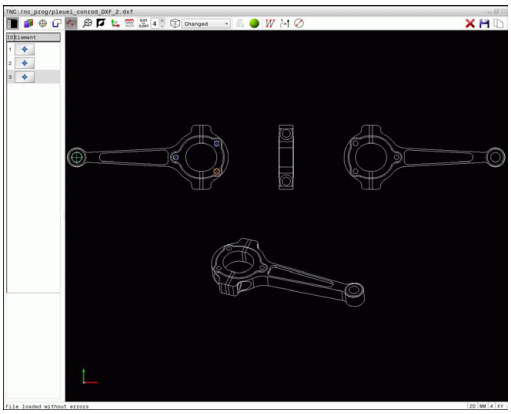

You must use the touchpad on the TNC keyboard or a mouse attached via the USB port in order to select a machining position.

If the positions to be selected are very close to one another, use the zoom function.

If required, configure the basic settings so that the TNC shows the tool paths.

Further Information: Basic settings, page 262

Three possibilities are available in the pattern generator for defining machining positions:

- Single selection: You select the desired machining position through individual mouse clicks.
  Further Information: Single selection, page 272
- Rapid selection of hole positions with the mouse area: By dragging the mouse to define an area, you can select all the hole positions within this area.
  Further Information: Rapid selection of hole positions with the mouse area, page 273
- Quick selection of hole positions via an icon: Actuate the icon and the TNC then displays all existing hole diameters.
  Further Information: Rapid selection of hole positions via icon, page 274

Select the file type

The following file types are available:

- Point table (**.PNT**)
- Conversational program (**.H**)

If you save the machining positions to a conversational program, the TNC creates a separate linear block with a cycle call for each machining position (**L X... Y... M99**). You can also transfer this program to old TNC controls and run it there.

The point table (.PTN) on the TNC 640 and the iTNC 530 are not compatible. Transferring and processing on the other control type in each case may lead to problems and unforeseen performance.

Single selection

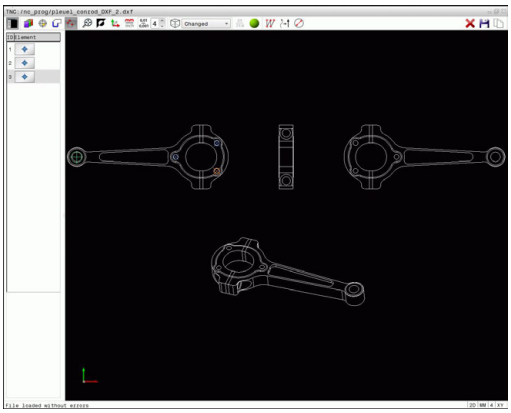

- Select the mode for choosing a machining position. The Graphics window becomes active for position selection
- To select a machining position: Click the desired element with the mouse and the TNC displays the element in orange. If the shift key is pressed at the same time, the TNC indicates possible machining positions on the element with stars. If you click on a circle, the TNC adopts the circle center as machining position. If the shift key is pressed at the same time, the TNC indicates possible machining positions with stars. The TNC copies the selected position to the List View window (display of a point symbol)
- If necessary you can also deselect elements that you have already selected, by clicking on the element in the Graphics window again, while pressing the **CTRL** key at the same time. Alternatively, select the element in the List View window and press **DEL**. You can deselect all selected elements by clicking on the icon
- If you want to specify the machining position at the intersection of two elements, click the first element with the left mouse button: the TNC displays stars at the selectable machining positions.
- Click on the second element (straight line, complete circle or circular arc) with the left mouse button. The TNC loads the intersection of the elements into the List View window (displays a point symbol). If there are several intersections, the TNC takes the intersection nearest to the mouse.
- Save the selected machining positions to the clipboard of the TNC so that you can then insert them as a positioning block with cycle call in a conversational program; or
- To save the selected machining positions to a point file, enter the target directory and any file name in the pop-up window displayed by the TNC. Default setting: Name of the DXF file. Alternately, you can also select the file type
- Confirm the entry: The TNC saves the contour program to the selected directory
- If you want to select more machining positions, press the Cancel Selected Elements icon and select as described above

Rapid selection of hole positions with the mouse area

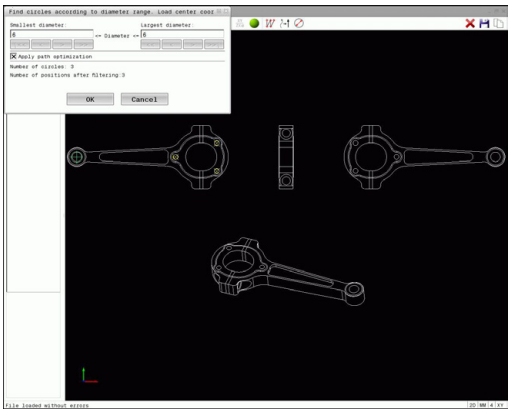

- Select the mode for choosing a machining position: The Graphics window is active for position selection
- To select machining positions, press the shift key and define an area with the left mouse button. The TNC assumes all complete circles that are completely within the area as hole positions: The TNC opens a window in which you can filter the holes by size
- Configure the filter settings and click **OK** to confirm: The TNC loads the selected positions into the List View window (displays a point symbol). **Further Information:** Filter settings, page 275
- If necessary you can also deselect elements that you have already selected, by clicking on the element in the Graphics window again, while pressing the **CTRL** key at the same time. Alternatively, select the element in the List View window and press **DEL**. If necessary you can also deselect elements that you have already selected, by dragging an area open again and pressing the **CTRL** key at the same time
- Save the selected machining positions to the clipboard of the TNC so that you can then insert them as a positioning block with cycle call in a conversational program; or
- To save the selected machining positions to a point file, enter the target directory and any file name in the pop-up window displayed by the TNC. Default setting: Name of the DXF file. Alternately, you can also select the file type
- Confirm the entry: The TNC saves the contour program to the selected directory
- If you want to select more machining positions, press the Cancel Selected Elements icon and select as described above

Rapid selection of hole positions via icon

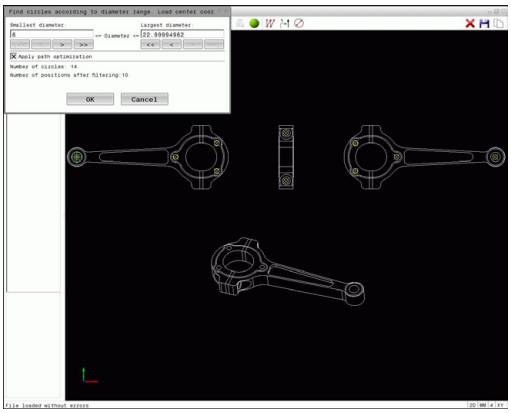

- Select the mode for choosing a machining position: The Graphics window is active for position selection
- Select the icon: The TNC opens a window in which you can filter the holes by size
- If necessary, configure the filter settings and click **OK** to confirm: The TNC loads the selected positions into the List View window (displays a point symbol).
  Further Information: Filter settings, page 275
- If necessary you can also deselect elements that you have already selected, by clicking on the element in the Graphics window again, while pressing the **CTRL** key at the same time. Alternatively, select the element in the List View window and press **DEL**. You can deselect all selected elements by clicking on the icon
- Save the selected machining positions to the clipboard of the TNC so that you can then insert them as a positioning block with cycle call in a conversational program; or
- To save the selected machining positions to a point file, enter the target directory and any file name in the pop-up window displayed by the TNC. Default setting: Name of the CAD file. Alternately, you can also select the file type
- Confirm the entry: The TNC saves the contour program to the selected directory
- If you want to select more machining positions, press the Cancel Selected Elements icon and select as described above

Filter settings

After you have used the quick selection function to mark hole positions, a pop-up window appears in which the smallest diameter found is to the left and the largest diameter to the right. With the buttons just below the diameter display you can adjust the diameter so that you can load the hole diameters that you want.

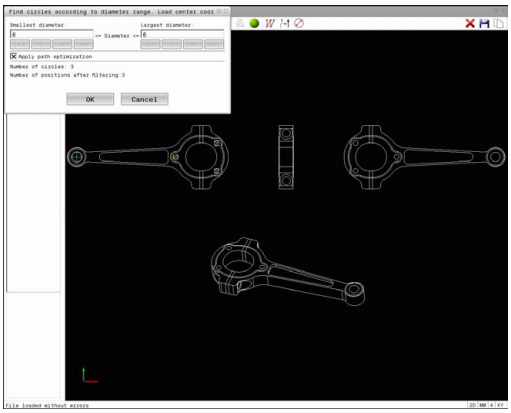

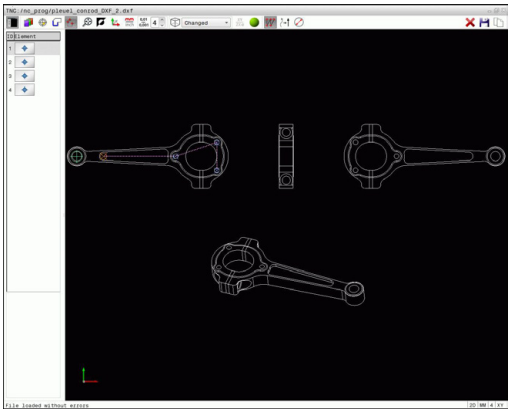

The following buttons are available:

Icon	Filter setting of smallest diameter
I<<	Display the smallest diameter found (default setting)
<	Display the next smaller diameter found
>	Display the next larger diameter found
>>	Display the largest diameter found. The TNC sets the filter for the smallest diameter to the value set for the largest diameter

Icon	Filter setting of largest diameter
<<	Display the smallest diameter found. The TNC sets the filter for the largest diameter to the value set for the smallest diameter
<	Display the next smaller diameter found
>	Display the next larger diameter found
>>I	Display the largest diameter found (default setting)

You can have the tool paths displayed by clicking the **Show tool path** icon.

Further Information: Basic settings, page 262

Element information

In the Element Information window, the TNC displays the coordinates of the machining position that you last selected in the List View window or Graphics window by clicking on the mouse.

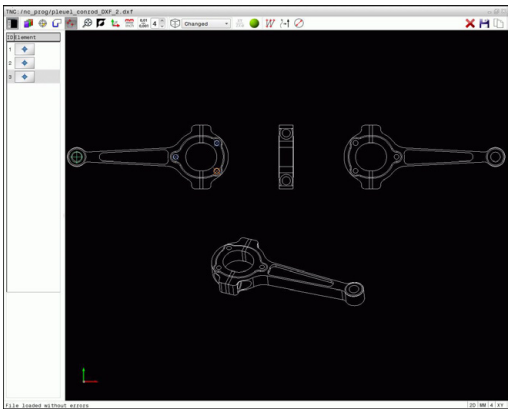

You can also use the mouse to change the graphic display. The following functions are available:

- In order to rotate the model shown in three dimensions: Hold down the right mouse button down and move the mouse
- To shift the model shown: Hold the center mouse button or the wheel button down and move the mouse.
- To zoom in on a certain area: Mark a zoom area by holding the left mouse button down. After you release the left mouse button, the TNC zooms in on the defined area
- To rapidly magnify and reduce any area: Rotate the mouse wheel backwards or forwards
- To return to the standard display: Press the shift key and simultaneously double-click with the right mouse key. The rotation angle is maintained if you only double-click with the right mouse key

8

Programming: Subprograms and Program Section Repeats

8.1 Labeling subprograms and program section repeats

Subprograms and program section repeats enable you to program a machining sequence once and then run it as often as necessary.

Label

The beginnings of subprograms and program section repeats are marked in a part program by labels **(G98 L)**.

A LABEL is identified by a number between 1 and 65535 or by a name you define. Each LABEL number or LABEL name can be set only once in the program with the **LABEL SET** key or by entering **G98**. The number of label names you can enter is only limited by the internal memory.

> Do not use a label number or label name more than once!

Label 0 (**G98 L0**) is used exclusively to mark the end of a subprogram and can therefore be used as often as desired.

8.2 Subprograms

Operating sequence

1 The TNC executes the part program up to calling a subprogram, **Ln.0**.
2 The subprogram is then executed from beginning to end, **G98 L0**.
3 The TNC then resumes the part program from the block after the subprogram call **Ln.0**

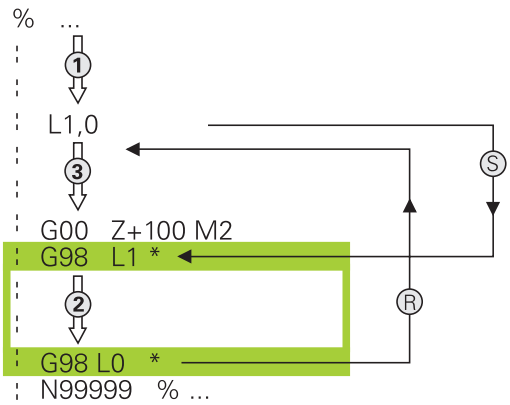

Programming notes

- A main program can contain any number of subprograms
- You can call subprograms in any sequence and as often as desired
- A subprogram cannot call itself
- Write subprograms after the block with M2 or M30
- If subprograms are located before the block with M2 or M30 in the part program, they will be executed at least once even if they are not called

Program the subprogram

LBL SET

- To mark the beginning: Press the **LBL SET** key
- Enter the subprogram number. If you want to use a label name, press the **LBL NAME** soft key to switch to text entry
- Enter the text
- Mark the end: Press the **LBL SET** key and enter the label number **0**

Calling a subprogram

LBL CALL

- Call a subprogram: Press the **LBL CALL** key
- Enter the subprogram number of the subprogram you wish to call. If you want to use a label name, press the **LBL NAME** soft key to switch to text entry.

L 0 is not permitted as it is only used to call the end of a subprogram.

8.3 Program-section repeats

Label G98

The beginning of a program section repeat is marked by the label **G98 L**. The end of a program section repeat is identified by **Ln,m**.

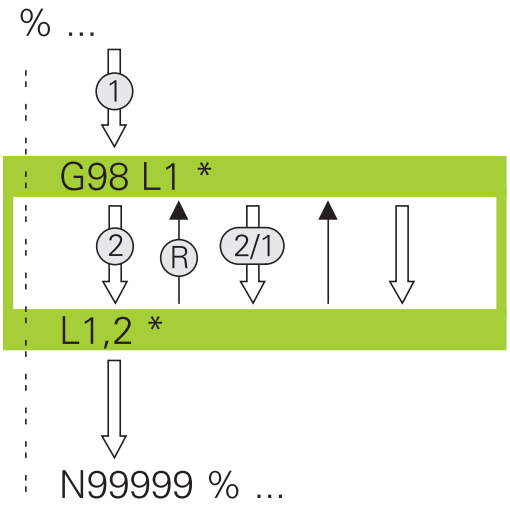

Operating sequence

1 The TNC executes the part program up to the end of the program section (**Ln,m**)
2 Then the program section between the called LABEL and the label call **Ln,m** is repeated the number of times entered after **m**
3 The TNC resumes the part program after the last repetition

Programming notes

- You can repeat a program section up to 65 534 times in succession
- The total number of times the program section is executed is always one more than the programmed number of repeats, because the first repeat starts after the first machining process.

Programming a program section repeat

LBL SET

- To mark the beginning, press the **LBL SET** key and enter a LABEL NUMBER for the program section you wish to repeat. If you want to use a label name, press the **LBL NAME** soft key to switch to text entry
- Enter the program section

Calling a program section repeat

LBL CALL

- Call a program section: Press the **LBL CALL** key
- Enter the program section number of the program section to be repeated. If you want to use a LABEL name, press the **LBL NAME** soft key to switch to text entry
- Enter the number of repeats **REP** and confirm with the **ENT** key

8.4 Any desired program as subprogram

Overview of the soft keys

If the **PGM CALL** key is pressed, the TNC displays the following soft keys:

Soft key	Function
CALL PROGRAM	Call a program with **%**
SELECT DATUM TABLE	Select a datum table with **%:TAB:**
SELECT POINT TABLE	Select a point table with **%:PAT:**
SELECT CONTOUR	Select a contour program with **%:CNT:**
SELECT PROGRAM	Select a program with **%:PGM:**
CALL SELECTED PROGRAM	Select last selected file with **%<>%**

8.4 Any desired program as subprogram

Operating sequence

1 The TNC executes the part program up to the block in which another program is called with **%**
2 Then the other part program is run from beginning to end
3 The TNC then resumes the first part program (i.e. the calling program) with the block after the program call

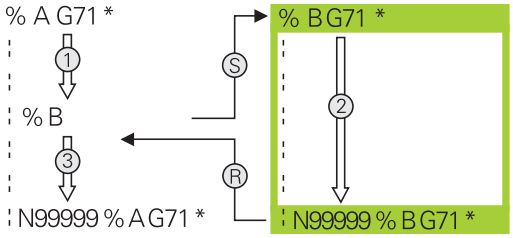

Programming notes

- The TNC does not need any labels to call any part program
- The called program must not contain the miscellaneous functions **M2** or **M30**. If you have defined subprograms with labels in the called part program, you then need to replace M2 or M30 with the **D09 P01 +0 P02 +0 P03 99** jump function to force a jump over this program section
- The called part program must not contain a **%** call into the calling part program, otherwise an infinite loop will result

Calling any program as a subprogram

Danger of collision!

Coordinate transformations that you define in the called program also remain in effect for the calling program too, unless you reset them.

If the program you want to call is located in the same directory as the program you are calling it from, then you only need to enter the program name.

If the called program is not located in the same directory as the program you are calling it from, you must enter the complete path, e.g. **TNC:\ZW35\ROUGH\PGM1.H**

If you want to call a DIN/ISO program, enter the file type .I after the program name.

You can also call a program with Cycle **G39**.

As a rule, Q parameters are effective globally with a program call with **%**. So please note that changes to Q parameters in the called program also influence the calling program.

Call a program with Calling a program

The **%** function calls any program as a subprogram. The control runs the called program from the position where it was called in the program.

PGM CALL

- To select the functions for program call, press the **PGM CALL** key

CALL PROGRAM

- Press the **CALL PROGRAM** soft key for the TNC to start the dialog for defining the program to be called. Enter the path name with the keyboard, or

SELECT FILE

- Press the **SELECT FILE** soft key: The TNC displays a selection window in which you can select the program to be called; confirm with the **END** key

Call with SELECT PROGRAM and CALL SELECTED PROGRAM

Use the function **%:PGM** to select any program as a subprogram and call it at another position in the program. The control runs the called program from the position where it was called in the program with **%<>%**.

The **%:PGM:** function is also permitted with string parameters, so that you can dynamically control program calls.

To select the program, proceed as follows:

PGM CALL
- To select the functions for program call, press the **PGM CALL** key

SELECT PROGRAM
- Press the **SELECT PROGRAM** soft key: The TNC starts the dialog for defining the program to be called

SELECT FILE
- Press the **SELECT FILE** soft key: The TNC displays a selection window in which you can select the program to be called; confirm with the **END** key

To call the selected program, proceed as follows:

PGM CALL
- To select the functions for program call, press the **PGM CALL** key

CALL SELECTED PROGRAM
- Press the **CALL SELECTED PROGRAM** soft key: The TNC calls the last program selected with **%<>%**

8.5 Nesting

Types of nesting

- Subprogram calls in subprograms
- Program-section repeats within a program-section repeat
- Subprogram calls in program-section repeats
- Program-section repeats in subprograms

Nesting depth

The nesting depth is the number of successive levels in which program sections or subprograms can call further program sections or subprograms.

- Maximum nesting depth for subprograms: 19
- Maximum nesting depth for main program calls: 19, where a **G79** acts like a main program call
- You can nest program section repeats as often as desired

Subprogram within a subprogram

Example NC blocks

%UPGMS G71 *	
...	
N17 L “SP1“,0 *	Subprogram at label G98 L1 is called
...	
N35 G00 G40 Z+100 M2 *	Last program block of the
	main program with M2
N36 G98 L “SP1“	Beginning of subprogram SP1
...	
N39 L2,0 *	Subprogram at label G98 L2 is called
...	
N45 G98 L0 *	End of subprogram 1
N46 G98 L2 *	Beginning of subprogram 2
...	
N62 G98 L0 *	End of subprogram 2
N99999999 %UPGMS G71 *	

Program execution

1 Main program UPGMS is executed up to block 17.
2 Subprogram SP1 is called, and executed up to block 39.
3 Subprogram 2 is called, and executed up to block 62. End of subprogram 2 and return jump to the subprogram from which it was called.
4 Subprogram 1 is called, and executed from block 40 up to block 45. End of subprogram 1 and return jump to the main program UPGMS.
5 Main program UPGMS is executed from block 18 up to block 35. Return jump to block 1 and end of program.

Repeating program section repeats

Example NC blocks

%REPS G71 *	
...	
N15 G98 L1 *	Beginning of program section repeat 1
...	
N20 G98 L2 *	Beginning of program section repeat 2
...	
N27 L2,2 *	Program section call with two repeats
...	
N35 L1,1 *	Program section between this block and G98 L1
...	(block N15) is repeated once
N99999999 %REPS G71 *	

Program execution

1 Main program REPS is executed up to block 27.
2 Program section between block 27 and block 20 is repeated twice.
3 Main program REPS is executed from block 28 to block 35.
4 Program section between block 35 and block 15 is repeated once (including the program section repeat between 20 and block 27).
5 Main program REPS is executed from block 36 to block 50. Return jump to block 1 and end of program

Repeating a subprogram

Example NC blocks

%UPGREP G71 *	
...	
N10 G98 L1 *	Beginning of program section repeat 1
N11 L2,0 *	Subprogram call
N12 L1,2 *	Program section call with two repeats
...	
N19 G00 G40 Z+100 M2 *	Last block of the main program with M2
N20 G98 L2 *	Beginning of subprogram
...	
N28 G98 L0 *	End of subprogram
N99999999 %UPGREP G71 *	

Program execution

1 Main program UPGREP is executed up to block 11.
2 Subprogram 2 is called and executed.
3 Program section between block 12 and block 10 is repeated twice. This means that subprogram 2 is repeated twice.
4 Main program UPGREP is executed from block 13 up to block 19. Return jump to block 1 and end of program

8.6 Programming examples

Example: Milling a contour in several infeeds

Program sequence:

- Pre-position the tool to the workpiece surface
- Enter the infeed depth in incremental values
- Contour milling
- Repeat infeed and contour-milling

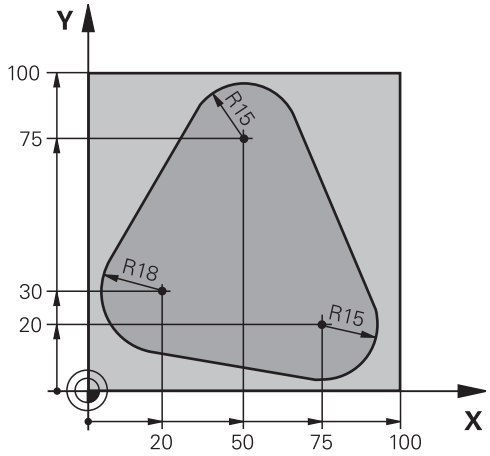

%PGMREP G71 *	
N10 G30 G17 X+0 Y+0 Z-40 *	
N20 G31 G90 X+100 Y+100 Z+0 *	
N30 T1 G17 S3500 *	Tool call
N40 G00 G40 G90 Z+250 *	Retract the tool
N50 I+50 J+50 *	Set pole
N60 G10 R+60 H+180 *	Pre-position in the working plane
N70 G01 Z+0 F1000 M3 *	Pre-position to the workpiece surface
N80 G98 L1 *	Set label for program section repeat
N90 G91 Z-4 *	Infeed depth in incremental values (in space)
N100 G11 G41 G90 R+45 H+180 F250 *	First contour point
N110 G26 R5 *	Contour approach
N120 H+120 *	
N130 H+60 *	
N140 H+0 *	
N150 H-60 *	
N160 H-120 *	
N170 H+180 *	
N180 G27 R5 F500 *	Contour departure
N190 G40 R+60 H+180 F1000 *	Retract tool
N200 L1,4 *	Return jump to label 1; section is repeated a total of 4 times
N200 G00 Z+250 M2 *	Retract the tool, end program
N99999999 %PGMWDH G71 *	

Example: Groups of holes

Program sequence:

- Approach the groups of holes in the main program
- Call the group of holes (subprogram 1) in the main program
- Program the group of holes only once in subprogram 1

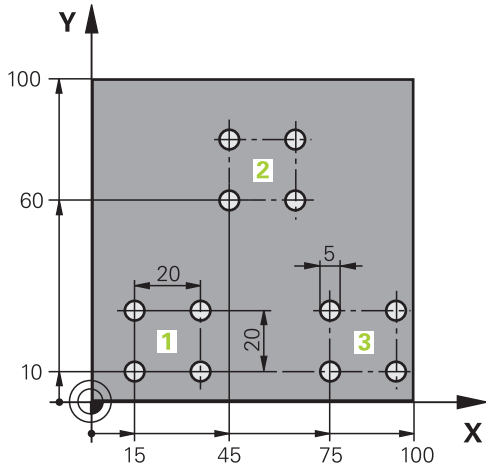

%SP1 G71 *	
N10 G30 G17 X+0 Y+0 Z-40 *	
N20 G31 G90 X+100 Y+100 Z+0 *	
N30 T1 G17 S3500 *	Tool call
N40 G00 G40 G90 Z+250 *	Retract the tool
N50 G200 DRILLING	Define the DRILLING cycle
Q200=2 ;SET-UP CLEARANCE	
Q201=-30 ;DEPTH	
Q206=300 ;FEED RATE FOR PLNGNG	
Q202=5 ;PLUNGING DEPTH	
Q210=0 ;DWELL TIME AT TOP	
Q203=+0 ;SURFACE COORDINATE	
Q204=2 ;2ND SET-UP CLEARANCE	
Q211=0 ;DWELL TIME AT DEPTH	
Q395=0 ;DEPTH REFERENCE	
N60 X+15 Y+10 M3 *	Move to starting point for group 1
N70 L1,0 *	Call the subprogram for the group
N80 X+45 Y+60 *	Move to starting point for group 2
N90 L1,0 *	Call the subprogram for the group
N100 X+75 Y+10 *	Move to starting point for group 3
N110 L1,0 *	Call the subprogram for the group
N120 G00 Z+250 M2 *	End of main program
N130 G98 L1 *	Beginning of subprogram 1: Group of holes
N140 G79 *	Call cycle for 1st hole
N150 G91 X+20 M99 *	Move to 2nd hole, call cycle
N160 Y+20 M99 *	Move to 3rd hole, call cycle
N170 X-20 G90 M99 *	Move to 4th hole, call cycle
N180 G98 L0 *	End of subprogram 1

```
N99999999 %UP1 G71 *
```

Example: Group of holes with several tools

Program sequence:

- Program the fixed cycles in the main program
- Call the complete hole pattern (subprogram 1) in the main program
- Approach the groups of holes (subprogram 2) in subprogram 1
- Program the group of holes only once in subprogram 2

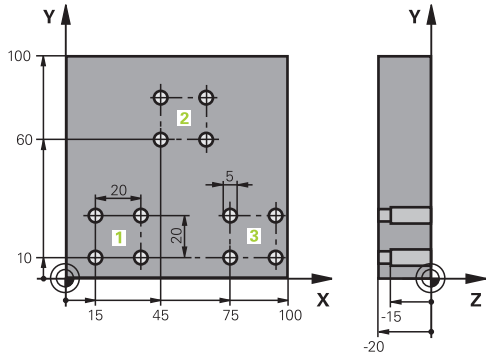

%SP2 G71 *	
N10 G30 G17 X+0 Y+0 Z-40 *	
N20 G31 G90 X+100 Y+100 Z+0 *	
N30 T1 G17 S5000 *	Centering drill tool call
N40 G00 G40 G90 Z+250 *	Retract the tool
N50 G200 DRILLING	Define the CENTERING cycle
Q200=2 ;SET-UP CLEARANCE	
Q201=-3 ;DEPTH	
Q206=250 ;FEED RATE FOR PLNGNG	
Q202=3 ;PLUNGING DEPTH	
Q210=0 ;DWELL TIME AT TOP	
Q203=+0 ;SURFACE COORDINATE	
Q204=10 ;2ND SET-UP CLEARANCE	
Q211=0.2 ;DWELL TIME AT DEPTH	
Q395=0 ;DEPTH REFERENCE	
N60 L1,0 *	Call subprogram 1 for the entire hole pattern
N70 G00 Z+250 M6 *	Tool change
N80 T2 G17 S4000 *	Drill tool call
N90 D0 Q201 P01 -25 *	New depth for drilling
N100 D0 Q202 P01 +5 *	New plunging depth for drilling
N110 L1,0 *	Call subprogram 1 for the entire hole pattern
N120 G00 Z+250 M6 *	Tool change
N130 T3 G17 S500 *	Reamer tool call
N140 G201 REAMING	Cycle definition: REAMING
Q200=2 ;SET-UP CLEARANCE	
Q201=-15 ;DEPTH	
Q206=250 ;FEED RATE FOR PLNGNG	
Q211=0.5 ;DWELL TIME AT DEPTH	
Q208=400 ;RETRACTION FEED RATE	
Q203=+0 ;SURFACE COORDINATE	
Q204=10 ;2ND SET-UP CLEARANCE	
N150 L1,0 *	Call subprogram 1 for the entire hole pattern

N160 G00 Z+250 M2 *	End of main program
N170 G98 L1 *	Beginning of subprogram 1: Entire hole pattern
N180 G00 G40 G90 X+15 Y+10 M3 *	Move to starting point for group 1
N190 L2,0 *	Call subprogram 2 for the group
N200 X+45 Y+60 *	Move to starting point for group 2
N210 L2,0 *	Call subprogram 2 for the group
N220 X+75 Y+10 *	Move to starting point for group 3
N230 L2,0 *	Call subprogram 2 for the group
N240 G98 L0 *	End of subprogram 1
N250 G98 L2 *	Beginning of subprogram 2: Group of holes
N260 G79 *	Call cycle for 1st hole
N270 G91 X+20 M99 *	Move to 2nd hole, call cycle
N280 Y+20 M99 *	Move to 3rd hole, call cycle
N290 X-20 G90 M99 *	Move to 4th hole, call cycle
N300 G98 L0 *	End of subprogram 2
N310 %UP2 G71 *	

9

Programming: Q Parameters

9.1 Principle and overview of functions

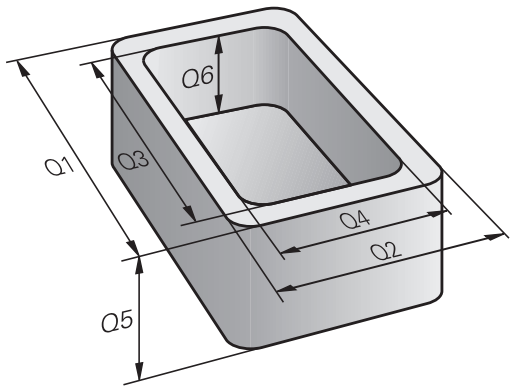

With Q parameters you can program entire families of parts in a single NC program by programming variable Q parameters instead of fixed numerical values.

Use Q parameters for e.g.:

- Coordinate values
- Feed rates
- Spindle speeds
- Cycle data

With Q parameters you can also:

- Program contours that are defined through mathematical functions
- Make execution of machining steps depend on certain logical conditions

Q parameters are always identified with letters and numbers. The letters determine the type of Q parameter and the numbers the Q parameter range.

For more information, see the table below:

Q parameter type	Q parameter range	Meaning
Q parameters:		**Parameters effect all NC programs in the TNC memory**
	0 - 99	Parameters for the **user**, if there are no overlaps with the HEIDENHAIN-SL cycles
	100 - 199	Parameters for system information on the TNC that can be read by the NC programs of the user or by cycles
	200 - 1199	Parameters primarily used for HEIDENHAIN cycles
	1200 - 1399	Parameters that are primarily used with manufacturer cycles when values are given back to the user program
	1400 - 1599	Parameters primarily used as input parameters for manufacturer cycles
	1600 - 1999	Parameters for **users**
QL parameters:		**Parameters only effective locally within an NC program**
	0 - 499	Parameters for **users**
QR parameters:		**Parameters that are nonvolatile on all NC programs in the TNC memory, i.e. they remain in effect even after a power interruption**
	0 - 499	Parameters for **users**

QS parameters (the **S** stands for string) are also available on the TNC and enable you to process texts.

Q parameter type	Q parameter range	Meaning
QS parameters:		**Parameters effect all NC programs in the TNC memory**
	0 - 99	Parameters for the **user**, where no overlaps with the HEIDENHAIN SL cycles are present
	100 - 199	Parameters for system information on the TNC that can be read by the NC programs of the user or by cycles
	200 - 1199	Parameters primarily used for HEIDENHAIN cycles
	1200 - 1399	Parameters that are primarily used with manufacturer cycles when values are given back to the user program
	1400 - 1599	Parameters primarily used as input parameters for manufacturer cycles
	1600 - 1999	Parameters for **users**

You gain maximum safety for your applications by using only Q parameter ranges recommended for the user in your NC programs.

Please note that the specified use of the Q parameter ranges is recommended by HEIDENHAIN but cannot be ensured.

Machine manufacturer or third-party functions may still cause overlaps with the user's NC program. Please refer to the machine manual and third-party documentation for this.

9.1 Principle and overview of functions

Programming notes

You can mix Q parameters and fixed numerical values within an NC program.

Q parameters can be assigned numerical values between –999 999 999 and +999 999 999. The input range is limited to 16 digits, of which 9 may be before the decimal point. Internally the TNC calculates numbers up to a value of 10^{10}.

You can assign a maximum of 255 characters to **QS** parameters.

The TNC always assigns some Q and QS parameters the same data. For example the Q parameter **Q108** is always assigned the current tool radius, see " Preassigned Q parameters", page 344.

The TNC saves numerical values internally in a binary number format (standard IEEE 754). Due to this standardized format some decimal numbers do not have an exact binary representation (round-off error). Keep this in mind especially when you use calculated Q-parameter contents for jump commands or positioning movements.

Calling Q parameter functions

While you are writing a machining program, press the **Q** key (in the numeric keypad for numerical input and axis selection underneath the **+/-** key). The TNC then displays the following soft keys:

Soft key	Function group	Page
BASIC ARITHM.	Basic arithmetic (assign, add, subtract, multiply, divide, square root)	303
TRIGO-NOMETRY	Trigonometric functions	305
JUMP	If/then conditions, jumps	307
DIVERSE FUNCTION	Other functions	310
FORMULA	Entering formulas directly	329
CONTOUR FORMULA	Function for machining complex contours	See Cycle Programming User's Manual

The TNC shows the soft keys Q, QL and QR when you are defining or assigning a Q parameter. First press one of these soft keys to select the desired type of parameter, and then enter the parameter number.

If you have a USB keyboard connected, you can press the **Q** key to open the dialog for entering a formula.

9.2 Part families—Q parameters in place of numerical values

Application

The Q parameter function **D0: ASSIGN** assigns numerical values to Q parameters. This enables you to use variables in the program instead of fixed numerical values.

Example NC blocks

N150 D00 Q10 P01 +25 *	Assign
...	Q10 is assigned the value 25
N250 G00 X +Q10 *	Corresponds to G00 X +25

You need write only one program for a whole family of parts, entering the characteristic dimensions as Q parameters.

To program a particular part, you then assign the appropriate values to the individual Q parameters.

Example: Cylinder with Q parameters

Cylinder radius:	R = Q1
Cylinder height:	H = Q2
Cylinder Z1:	Q1 = +30 Q2 = +10
Cylinder Z2:	Q1 = +10 Q2 = +50

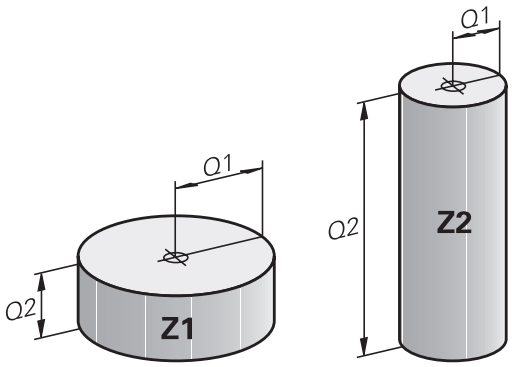

9.3 Describing contours with mathematical functions

Application

The Q parameters listed below enable you to program basic mathematical functions in a machining program:

- Select a Q parameter function: Press the **Q** key (in the numerical keypad on the right). The Q parameter functions are displayed in a soft key row
- Select the mathematical functions: Press the **BASIC ARITHMETIC** soft key. The TNC then displays the following soft keys:

Overview

Soft key	Function
D0 X = Y	**D00**: ASSIGN e.g. **D00 Q5 P01 +60 *** Directly assign value
D1 X + Y	**D01**: ADDITION e.g. **D01 Q1 P01 -Q2 P02 -5 *** Form and assign sum from two values
D2 X - Y	**D02**: SUBTRACTION e.g. **D02 Q1 P01 +10 P02 +5 *** Form and assign difference between two values
D3 X * Y	**D03**: MULTIPLICATION e.g. **D03 Q2 P01 +3 P02 +3 *** Form and assign the product of two values
D4 X / Y	**D04**: DIVISION e.g. **D04 Q4 P01 +8 P02 +Q2 *** Form and assign the quotient of two values **Not permitted:** Division by 0
D5 SQRT	**D05**: SQUARE ROOT e.g. **D05 Q50 P01 4 *** Form and assign the square root of a value **Not permitted:** Square root from negative value

To the right of the "=" character you can enter the following:

- Two numbers
- Two Q parameters
- A number and a Q parameter

The Q parameters and numerical values in the equations can be entered with positive or negative signs.

Programming fundamental operations

Example 1

Q

- Select the Q parameter function: Press the **Q** key

BASIC ARITHM.

- Select the mathematical functions: Press the **BASIC ARITHMETIC** soft key

FN0 X = Y

- Select the ASSIGN Q parameter function: Press the **D0 X=Y** soft key

PARAMETER NUMBER FOR RESULT?

ENT

- Enter **12** (Q parameter number) and confirm with the **ENT** key

FIRST VALUE / PARAMETER?

ENT

- Enter **10**: Assign the numerical value 10 to Q5 and confirm with the **ENT** soft key

NC sets in the TNC

```
N16 D00 Q5 P01 +10 *
N17 D03 Q12 P01 +Q5 P02 +7 *
```

Example 2

Q

- Select the Q parameter function: Press the **Q** key

BASIC ARITHM.

- Select the mathematical functions: Press the **BASIC ARITHMETIC** soft key

FN3 X * Y

- To select the MULTIPLICATION Q parameter function, press the **D3 X * Y** soft key

PARAMETER NUMBER FOR RESULT?

ENT

- Enter **12** (Q parameter number) and confirm with the **ENT** key

FIRST VALUE / PARAMETER?

ENT

- Enter **Q5** as the first value and confirm with the **ENT** key

SECOND VALUE / PARAMETER?

ENT

- Enter **7** as the second value and confirm with the **ENT** key

9.4 Angle functions

Definitions

Sine: sin α = a / c
Cosine: cos α = b / c
Tangent: tan α = a / b = sin α / cos α

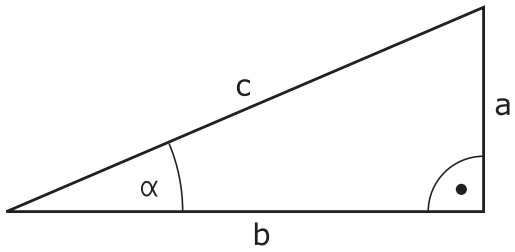

where

- c is the side opposite the right angle
- a is the side opposite the angle α
- b is the third side.

The TNC can find the angle from the tangent:

α = arctan (a / b) = arctan (sin α / cos α)

Example:

a = 25 mm

b = 50 mm

α = arctan (a / b) = arctan 0.5 = 26.57°

Furthermore:

$a^2 + b^2 = c^2$ (where $a^2 = a \times a$)

$c = \sqrt{(a^2 + b^2)}$

Programming trigonometric functions

Press the **TRIGONOMETRY** soft key to call the trigonometric functions. The TNC then displays the soft keys that are listed in the table below.

Soft key	Function
D6 SIN(X)	**D06**: SINUS e. g. **D06 Q20 P01 -Q5 *** Define and assign the sine of an angle in degrees (°)
FN7 COS(X)	**D07**: COSINUS e. g. **D07 Q21 P01 -Q5 *** Define and assign the cosine of an angle in degrees (°)
D8 X LEN Y	**D08**: ROOT SUM OF SQUARES e. g. **D08 Q10 P01 +5 P02 +4 *** Form and assign length from two values
D13 X ANG Y	**D13**: ANGLE e. g. **D13 Q20 P01 +10 P02 -Q1 *** Calculate the angle from the arc tangent of the opposite and adjacent sides or from the sine and cosine of the angle (0 < angle < 360°) and assign it to a parameter

9.5 Calculation of circles

Application

The TNC can use the functions for calculating circles to calculate the circle center and the circle radius from three or four given points on the circle. The calculation is more accurate if four points are used.

Application: These functions can be used if you wish to determine the location and size of a hole or a pitch circle using the programmable probing function.

Soft key	Function
D23 3 POINTS OF CIRCLE	FN 23: Determining the CIRCLE DATA from three points e. g. **D23 Q20 P01 Q30**

The coordinate pairs of three points on a circle must be saved in Q30 and the following five parameters—in this case, up to Q35.

The TNC then saves the circle center in the reference axis (X if spindle axis is Z) in parameter Q20, the circle center in the minor axis (Y if spindle axis is Z) in parameter Q21, and the circle radius in parameter Q22.

Soft key	Function
D24 4 POINTS OF CIRCLE	FN 24: Determining the CIRCLE DATA from four points e. g. **D24 Q20 P01 Q30**

The coordinate pairs of four points on a circle must be saved in Q30 and the following seven parameters—in this case, up to Q37.

The TNC then saves the circle center in the reference axis (X if spindle axis is Z) in parameter Q20, the circle center in the minor axis (Y if spindle axis is Z) in parameter Q21, and the circle radius in parameter Q22.

Note that **D23** and **D24** automatically overwrite the resulting parameter and the two following parameters.

9.6 If-then decisions with Q parameters

Application

The TNC can make logical if-then decisions by comparing a Q parameter with another Q parameter or with a numerical value. If the condition is fulfilled, the TNC continues the program at the label that is programmed after the condition.

Further Information: Labeling subprograms and program section repeats, page 278

If it is not fulfilled, the TNC continues with the next block.

To call another program as a subprogram, enter a **%** program call after the block with the label.

Unconditional jumps

An unconditional jump is programmed by entering a conditional jump whose condition is always true. Example:

D09 P01 +10 P02 +10 P03 1 *

Programming if-then decisions

Press the **JUMP** soft key to call the if-then conditions. The TNC then displays the following soft keys:

Soft key	Function
D9 IF X EQ Y GOTO	**D09**: IF EQUAL, JUMP e. g. **D09 P01 +Q1 P02 +Q3 P03 “UPCAN25“ *** If both values or parameters are equal, jump to specified label
D10 IF X NE Y GOTO	**D10**: IF UNEQUAL, JUMP e. g. **D10 P01 +10 P02 -Q5 P03 10 *** If both values or parameters are unequal, jump to specified label
D11 IF X GT Y GOTO	**D11**: IF GREATER, JUMP g. g. **D11 P01 +Q1 P02 +10 P03 5 *** If the first value or parameter is greater than the second value or parameter, jump to specified label
D12 IF X LT Y GOTO	**D12**: IF LESS, JUMP e. g. **D12 P01 +Q5 P02 +0 P03 “ANYNAME“ *** If the first value or parameter is smaller than the second value or parameter, jump to specified label

9.7 Checking and changing Q parameters

Procedure

You can check Q parameters in all operating modes, and also edit them.

- If required, cancel the program run (e.g. press the **NC STOP** button and **INTERNAL STOP** soft key) or stop the test run

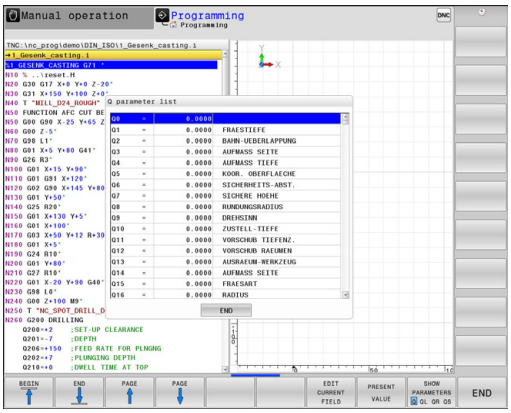

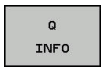

- To call the Q parameter functions, press the **Q INFO** soft key or the **Q** key
- The TNC lists all parameters and their current values. Use the arrow keys or the **GOTO** key to select the desired parameter.
- If you would like to change the value, press the **EDIT CURRENT FIELD** soft key. Enter a new file name and confirm with **ENT**
- To leave the value unchanged, press the **PRESENT VALUE** soft key or end the dialog with the **END** key.

The parameters used by the TNC internally or in cycles are provided with comments.

If you want to check or edit local, global or string parameters, press the **SHOW PARAMETERS Q QL QR QS** soft key. The TNC then displays the specific parameter type. The functions previously described also apply.

You can have the Q parameters be shown in the additional status display in all operating modes (except for the **Programming** operating mode).

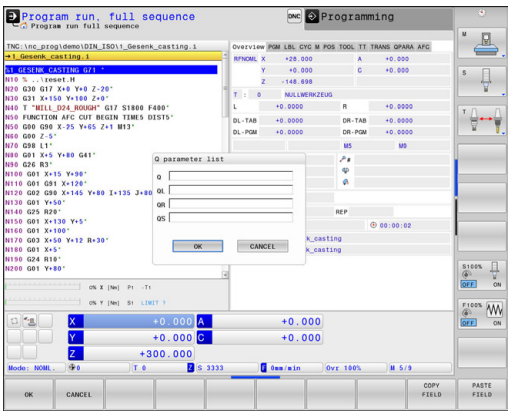

- If necessary cancel the program run (e.g. Press the **NC STOP** key and **INTERNAL STOP** soft key) or stop the program test

- Call the soft key row for screen layout

PROGRAM + STATUS

- Select the screen layout with additional status display: In the right half of the screen, the TNC shows the **Overview** status form

STATUS OF Q PARAM.

- Press the soft key **STATUS OF Q PARAM.**

Q PARAMETER LIST

- Press the **Q PARAMETER LIST** soft key: The TNC opens a pop-up window
- For each parameter type (Q, QL, QR, QS), define the parameter numbers you wish to control. Separate single Q parameters with a comma, and connect sequential Q parameters with a hyphen, e.g. 1,3,200-208. The input range per parameter type is 132 characters

The display in the **QPARA** tab always contains eight decimal places. The result of Q1 = COS89.999 is shown by the control as 0.00001745, for example. Very large or very small values are displayed by the control in exponential notation. The result of Q1 = COS 89.999 * 0.001 is shown by the control as +1.74532925e-08, whereby e-08 corresponds to the factor of 10^{-8}.

9.8 Additional functions

Overview

Press the **DIVERSE FUNCTION** soft key to call the additional functions. The TNC then displays the following soft keys:

Soft key	Function	Page
D14 ERROR=	**D14** Display error messages	311
D16 F-PRINT	**D16** Formatted output of texts or Q parameter values	315
D18 SYS-DATUM READ	**D18** Read system data	319
D19 PLC=	**D19** Transfer values to the PLC	327
D20 WAIT FOR	**D20** NC and PLC synchronization	327
D29 PLC LIST=	**D29** Transfer up to eight values to the PLC	328
D37 EXPORT	**D37** Export local Q parameters or QS parameters into a calling program	328
D26 OPEN THE TABLE	**D26** Open a freely definable table	415
D27 WRITE TO TABLE	**D27** Write to a freely definable table	415
D28 READ TABLE	**D28** Read from a freely definable table	416

D14: Displaying error messages

With the **D14** function you can call messages under program control. The messages are predefined by the machine manufacturer or by HEIDENHAIN. Whenever the TNC comes to a block with **D14** in the Program Run or Test Run mode, it interrupts the program run and displays a message. The program must then be restarted.

Error numbers area	Standard dialog
0 ... 999	Machine-dependent dialog
1000 ... 1199	Internal error messages

Example NC block

The TNC is to display the message stored under error number 1000.

```
N180 D14 P01 1000 *
```

Error message predefined by HEIDENHAIN

Error number	Text
1000	Spindle?
1001	Tool axis is missing
1002	Tool radius too small
1003	Tool radius too large
1004	Range exceeded
1005	Start position incorrect
1006	ROTATION not permitted
1007	SCALING FACTOR not permitted
1008	MIRROR IMAGE not permitted
1009	Datum shift not permitted
1010	Feed rate is missing
1011	Input value incorrect
1012	Incorrect sign
1013	Entered angle not permitted
1014	Touch point inaccessible
1015	Too many points
1016	Contradictory input
1017	CYCL incomplete
1018	Plane wrongly defined
1019	Wrong axis programmed
1020	Wrong rpm
1021	Radius comp. undefined

Error number	Text
1022	Rounding-off undefined
1023	Rounding radius too large
1024	Program start undefined
1025	Excessive nesting
1026	Angle reference missing
1027	No fixed cycle defined
1028	Slot width too small
1029	Pocket too small
1030	Q202 not defined
1031	Q205 not defined
1032	Q218 must be greater than Q219
1033	CYCL 210 not permitted
1034	CYCL 211 not permitted
1035	Q220 too large
1036	Q222 must be greater than Q223
1037	Q244 must be greater than 0
1038	Q245 must not equal Q246
1039	Angle range must be under 360°
1040	Q223 must be greater than Q222
1041	Q214: 0 not permitted
1042	Traverse direction not defined
1043	No datum table active
1044	Position error: center in axis 1
1045	Position error: center in axis 2
1046	Hole diameter too small
1047	Hole diameter too large
1048	Stud diameter too small
1049	Stud diameter too large
1050	Pocket too small: rework axis 1
1051	Pocket too small: rework axis 2
1052	Pocket too large: scrap axis 1
1053	Pocket too large: scrap axis 2
1054	Stud too small: scrap axis 1
1055	Stud too small: scrap axis 2
1056	Stud too large: rework axis 1
1057	Stud too large: rework axis 2

Error number	Text
1058	TCHPROBE 425: length exceeds max
1059	TCHPROBE 425: length below min
1060	TCHPROBE 426: length exceeds max
1061	TCHPROBE 426: length below min
1062	TCHPROBE 430: diameter too large
1063	TCHPROBE 430: diameter too small
1064	No measuring axis defined
1065	Tool breakage tolerance exceeded
1066	Enter Q247 unequal to 0
1067	Enter Q247 greater than 5
1068	Datum table?
1069	Enter Q351 unequal to 0
1070	Thread depth too large
1071	Missing calibration data
1072	Tolerance exceeded
1073	Block scan active
1074	ORIENTATION not permitted
1075	3-D ROT not permitted
1076	Activate 3-D ROT
1077	Enter depth as negative
1078	Q303 in meas. cycle undefined!
1079	Tool axis not allowed
1080	Calculated values incorrect
1081	Contradictory meas. points
1082	Incorrect clearance height
1083	Contradictory plunge type
1084	This fixed cycle not allowed
1085	Line is write-protected
1086	Oversize greater than depth
1087	No point angle defined
1088	Contradictory data
1089	Slot position 0 not allowed
1090	Enter an infeed not equal to 0
1091	Switchover of Q399 not allowed
1092	Tool not defined
1093	Tool number not allowed

Error number	Text
1094	Tool name not allowed
1095	Software option not active
1096	Kinematics cannot be restored
1097	Function not permitted
1098	Contradictory workpc. blank dim.
1099	Measuring position not allowed
1100	Kinematic access not possible
1101	Meas. pos. not in traverse range
1102	Preset compensation not possible
1103	Tool radius too large
1104	Plunging type is not possible
1105	Plunge angle incorrectly defined
1106	Angular length is undefined
1107	Slot width is too large
1108	Scaling factors not equal
1109	Tool data inconsistent

D16 – Formatted output of text and Q parameter values

With **D16**, you can also output to the screen any messages from the NC program. Such messages are displayed by the TNC in a pop-up window.

The function **D16** transfers Q parameter values and texts in a selectable format. If you send the values, the TNC saves the data in the file that you defined in the **D16** block. The maximum size of the output file is 20 kilobytes.

To output the formatted texts and Q-parameter values, create a text file with the TNC's text editor. In this file you then define the output format and Q parameters you want to output.

Example of a text file to define the output format:

"MEASURING LOG OF IMPELLER CENTER OF GRAVITY";

"DATUM: %02d.%02d.%04d",DAY,MONTH,YEAR4;

"TIME: %02d:%02d:%02d",HOUR,MIN,SEC;

"NO. OF MEASURED VALUES: = 1";

“X1 = %9.3LF“, Q31;

“Y1 = %9.3LF“, Q32;

"Z1 = %9.3LF", Q33;

When you create a text file, use the following formatting functions:

Special characters	Function
"....."	Define output format for texts and variables between the quotation marks
%9.3LF	Define the format for Q parameters: 9 total characters (incl. decimal point), of which 3 are places after the decimal point, long, floating (decimal number)
%S	Format for text variable
%d	Format for integer
,	Separation character between output format and parameter
;	End of block character
\n	Line break

The following functions allow you to include the following additional information in the protocol log file:

Keyword	Function
CALL_PATH	Indicates the path for the NC program where you will find the FN16 function. Example: "Measuring program: %S",CALL_PATH;
M_CLOSE	Closes the file to which you are writing with FN16. Example: M_CLOSE;
M_APPEND	Upon renewed output, appends the log to the existing log. Example: M_APPEND;
M_APPEND_MAX	Upon renewed output, appends the log to the existing log until the maximum specified file size in kilobytes is exceeded. Example: M_APPEND_MAX20;
M_TRUNCATE	Overwrites the log upon renewed output. Example: M_TRUNCATE;
L_ENGLISH	Outputs text only for English conversational language
L_GERMAN	Outputs text only for German conversational language
L_CZECH	Outputs text only for Czech conversational language
L_FRENCH	Outputs text only for French conversational language
L_ITALIAN	Outputs text only for Italian conversational language
L_SPANISH	Outputs text only for Spanish conversational language
L_SWEDISH	Outputs text only for Swedish conversational language
L_DANISH	Outputs text only for Danish conversational language
L_FINNISH	Outputs text only for Finnish conversational language
L_DUTCH	Outputs text only for Dutch conversational language
L_POLISH	Outputs text only for Polish conversational language
L_PORTUGUE	Outputs text only for Portuguese conversational language
L_HUNGARIA	Outputs text only for Hungarian conversational language
L_SLOVENIAN	Outputs text only for Slovenian conversational language
L_ALL	Display text independently of the conversational language
HOUR	Number of hours from the real-time clock

Keyword	Function
MIN	Number of minutes from the real-time clock
SEC	Number of seconds from the real-time clock
DAY	Day from the real-time clock
MONTH	Month as a number from the real-time clock
STR_MONTH	Month as a string abbreviation from the real-time clock
YEAR2	Two-digit year from the real-time clock
YEAR4	Four-digit year from the real-time clock

In the part program, program D16 to activate the output:

```
N90 D16 P01 TNC:\MASK\MASK1.A/ TNC:\PROT1.TXT
```

The TNC then creates the file PROT1.TXT:

MEASURING LOG OF IMPELLER CENTER OF GRAVITY
DATE: July 15, 2015
TIME: 8:56:34 AM
NO. OF MEASURED VALUES : = 1
X1 = 149.360
Y1 = 25.509
Z1 = 37.000

If you output the same file more than once in the program, the TNC appends all texts to the end of the texts already output within the target file.

If you use **D16** more than once in the program, the TNC saves all texts in the file that you defined in the **D16** function. The file is not output until the TNC reads the block, or you press the **NC STOP** key, or you close the file with .

In the **D16** block, program the format file and the log file with their respective file type extensions

If you enter only the file name for the path of the log file, the TNC saves the log file in the directory in which the NC program with the **D16** function is located.

In the machine parameters (no. 102202) and (no. 102203) you can define a standard path for the output of protocol files.

Displaying messages on the TNC screen

You can also use the function **D16** to display any messages from the NC program in a pop-up window on the TNC screen. This makes it easy to display explanatory texts, including long texts, at any point in the program in a way that the user has to react to them. You can also display Q-parameter contents if the protocol description file contains such instructions.

For the message to appear on the TNC screen, you need only enter **SCREEN:** as the name of the protocol file.

```
N90 D16 P01 TNC:\MASK\MASK1.A/SCREEN:
```

If the message has more lines than fit in the pop-up window, you can use the arrow keys to page in the window.

To close the pop-up window, press the **CE** key. To have the program close the window, program the following NC block:

```
N90 D16 P01 TNC:\MASK\MASK1.A/SCLR:
```

> If you output the same file more than once in the program, the TNC appends all texts to the end of the texts already output within the target file.

Exporting messages

The **D16** function also enables you to save the log files externally.

Enter the complete target path in the **D16** function:

```
N90 D16 P01 TNC:\MSK\MSK1.A / PC325:\LOG\PRO1.TXT
```

> If you output the same file more than once in the program, the TNC appends all texts to the end of the texts already output within the target file.

D18: Reading system data

With the **D18** function you can read system data and store them in Q parameters. You select the system data through a group name (ID number), and additionally through a number and an index.

Group name, ID no.	Number	Index	Meaning
Program information, 10	3	-	Number of the active fixed cycle
	103	Q parameter-number	Relevant within NC cycles; for inquiry as to whether the Q parameter given under IDX was explicitly stated in the associated CYCLE DEF.
System jump addresses, 13	1	-	Label jumped to during M2/M30 instead of ending the current program Value = 0: M2/M30 functions normally
	2	-	Label jumped to in the event of FN14: ERROR with the NC CANCEL reaction instead of aborting the program with an error message. The error number programmed in the FN14 command can be read under ID992 NR14. Value = 0: FN14 has the normal effect.
	3	-	Label jumped to in the event of an internal server error (SQL, PLC, CFG) instead of aborting the program with an error message. Value = 0: Server error has the normal effect.
Machine status, 20	1	-	Active tool number
	2	-	Prepared tool number
	3	-	Active tool axis 0=X, 1=Y, 2=Z, 6=U, 7=V, 8=W
	4	-	Programmed spindle speed
	5	-	Active spindle condition: -1=not defined, 0=M3 active, 1=M4 active, 2=M5 after M3, 3=M5 after M4
	7	-	Gear range
	8	-	Coolant status: 0=off, 1=on
	9	-	Active feed rate
	10	-	Index of prepared tool
	11	-	Index of active tool
Channel data, 25	1	-	Channel number

Group name, ID no.	Number	Index	Meaning
Cycle parameter, 30	1	-	Set-up clearance of active fixed cycle
	2	-	Drilling depth / milling depth of active fixed cycle
	3	-	Plunging depth of active machining cycle
	4	-	Feed rate for pecking in active fixed cycle
	5	-	1st side length for rectangular pocket cycle
	6	-	2nd side length for rectangular pocket cycle
	7	-	1st side length for slot cycle
	8	-	2nd side length for slot cycle
	9	-	Radius for circular pocket cycle
	10	-	Feed rate for milling in active fixed cycle
	11	-	Direction of rotation for active fixed cycle
	12	-	Dwell time for active fixed cycle
	13	-	Thread pitch for Cycles 17, 18
	14	-	Finishing allowance for active fixed cycle
	15	-	Direction angle for rough out in active fixed cycle
	21	-	Probing angle
	22	-	Probing path
	23	-	Probing feed rate
Modal condition, 35	1	-	Dimensions: 0 = absolute (G90) 1 = incremental (G91)
Data for SQL tables, 40	1	-	Result code for the last SQL command
Data from the tool table, 50	1	Tool no.	Tool length
	2	Tool no.	Tool radius
	3	Tool no.	Tool radius R2
	4	Tool no.	Oversize for tool length DL
	5	Tool no.	Tool radius oversize DR
	6	Tool no.	Tool radius oversize DR2
	7	Tool no.	Tool locked (0 or 1)
	8	Tool no.	Number of the replacement tool
	9	Tool no.	Maximum tool age TIME1
	10	Tool no.	Maximum tool age TIME2
	11	Tool no.	Current tool age CUR. TIME
	12	Tool no.	PLC status
	13	Tool no.	Maximum tooth length LCUTS
	14	Tool no.	Maximum plunge angle ANGLE
	15	Tool no.	TT: Number of tool teeth CUT
	16	Tool no.	TT: Wear tolerance for length, LTOL
	17	Tool no.	TT: Wear tolerance for radius, RTOL

Group name, ID no.	Number	Index	Meaning
	18	Tool no.	TT: Rotational direction DIRECT (0=positive/–1=negative)
	19	Tool no.	TT: Offset in plane R-OFFS
	20	Tool no.	TT: Offset in length L-OFFS
	21	Tool no.	TT: Breakage tolerance for length, LBREAK
	22	Tool no.	TT: Breakage tolerance for radius, RBREAK
	23	Tool no.	PLC value
	25	Tool no.	Probe center offset in minor axis (CAL-OF$_2$)
	26	Tool no.	Spindle angle during calibration (CAL-ANG)
	27	Tool no.	Tool type for pocket table
	28	Tool no.	Maximum rpm NMAX
	32	Tool no.	Point angle TANGLE
	34	Tool no.	LIFTOFF allowed (0= No, 1= Yes)
	35	Tool no.	Wear tolerance for radius R2TOL
	37	Tool no.	Corresponding line in the touch-probe table
	38	Tool no.	Timestamp of last use
Pocket table data, 51	1	Pocket number	Tool number
	2	Pocket number	Special tool: 0=No, 1=Yes
	3	Pocket number	Fixed pocket: 0=No, 1=Yes
	4	Pocket number	Locked pocket: 0=No, 1=Yes
	5	Pocket number	PLC status
Tool location, 52	1	Tool no.	Pocket number P
	2	Tool no.	Magazine number
File information, 56	1	-	Number of lines of the selected tool table
	2	-	Number of lines of the selected datum table
	4	-	Number of lines in the open, freely definable table Value -1: No table open
Values programmed immediately after TOOL CALL, 60	1	-	Tool number T
	2	-	Active tool axis 0 = X 6 = U 1 = Y 7 = V 2 = Z 8 = W
	3	-	Spindle speed S
	4	-	Oversize for tool length DL
	5	-	Tool radius oversize DR
	6	-	Automatic TOOL CALL 0 = Yes, 1 = No
	7	-	Tool radius oversize DR2
	8	-	Tool index

Group name, ID no.	Number	Index	Meaning
	9	-	Active feed rate
Values programmed immediately after TOOL DEF, 61	1	-	Tool number T
	2	-	Length
	3	-	Radius
	4	-	Index
	5	-	Tool data programmed in TOOL DEF 1 = Yes, 0 = No
Active tool compensation, 200	1	1 = without oversize 2 = with oversize 3 = with oversize and Oversize from TOOL CALL	Active radius
	2	1 = without oversize 2 = with oversize 3 = with oversize and Oversize from TOOL CALL	Active length
	3	1 = without oversize 2 = with oversize 3 = with oversize and Oversize from TOOL CALL	Rounding radius R2
Active transformations, 210	1	-	Basic rotation manual operating mode
	2	-	Programmed rotation with Cycle 10
	3	-	Active mirrored axis
			0: Mirroring not active
			+1: X axis mirrored
			+2: Y axis mirrored
			+4: Z axis mirrored
			+64: U axis mirrored
			+128: V axis mirrored
			+256: W axis mirrored
			Combinations = Sum of individual axes
	4	1	Active scaling factor in X axis
	4	2	Active scaling factor in Y axis
	4	3	Active scaling factor in Z axis

Group name, ID no.	Number	Index	Meaning
	4	7	Active scaling factor in U axis
	4	8	Active scaling factor in V axis
	4	9	Active scaling factor in W axis
	5	1	3-D ROT A axis
	5	2	3-D ROT B axis
	5	3	3-D ROT C axis
	6	-	Tilted working plane active / inactive (–1/0) in a Program Run operating mode
	7	-	Tilted working plane active / inactive (–1/0) in a Manual operating mode
Active datum shift, 220	2	1	X axis
		2	Y axis
		3	Z axis
		4	A axis
		5	B axis
		6	C axis
		7	U axis
		8	V axis
		9	W axis
Traverse range, 230	2	1 to 9	Negative software limit switch in axes 1 to 9
	3	1 to 9	Positive software limit switch in axes 1 to 9
	5	-	Software limit switch on or off: 0 = on, 1 = off
Nominal position in the REF system, 240	1	1	X axis
		2	Y axis
		3	Z axis
		4	A axis
		5	B axis
		6	C axis
		7	U axis
		8	V axis
		9	W axis
Current position in the active coordinate system, 270	1	1	X axis
		2	Y axis
		3	Z axis
		4	A axis
		5	B axis
		6	C axis

Group name, ID no.	Number	Index	Meaning
		7	U axis
		8	V axis
		9	W axis
Interpretation of coordinates in turning operation, 310	20	1 to 3 (X, Y, Z)	Coordinates are give with respect to: 0 = diameter, -1 = radius
TS triggering touch probe, 350	50	1	Type of touch probe
		2	Line in the touch-probe table
	51	-	Effective length
	52	1	Effective ball radius
		2	Rounding radius
	53	1	Center offset (reference axis)
		2	Center offset (minor axis)
	54	-	Spindle-orientation angle in degrees (center offset)
	55	1	Rapid traverse
		2	Measuring feed rate
	56	1	Maximum measuring range
		2	Safety clearance
	57	1	Spindle orientation possible: 0=No, 1=Yes
		2	Spindle-orientation angle
TT tool touch probe	70	1	Type of touch probe
		2	Line in the touch-probe table
	71	1	Center point in reference axis (REF system)
		2	Center point in minor axis (REF system)
		3	Center point in tool axis (REF system)
	72	-	Plate radius
	75	1	Rapid traverse
		2	Measuring feed rate for stationary spindle
		3	Measuring feed rate for rotating spindle
	76	1	Maximum measuring range
		2	Safety clearance for linear measurement
		3	Safety clearance for radial measurement
	77	-	Spindle speed
	78	-	Probing direction
Reference point from touch probe cycle, 360	1	1 to 9 (X, Y, Z, A, B, C, U, V, W)	Last reference point of a manual touch probe cycle, or last touch point from Cycle 0 without probe length compensation but with probe radius compensation (workpiece coordinate system)

Group name, ID no.	Number	Index	Meaning
	2	1 to 9 (X, Y, Z, A, B, C, U, V, W)	Last reference point of a manual touch probe cycle, or last touch point from Cycle 0 without probe length or probe radius compensation (machine coordinate system)
	3	1 to 9 (X, Y, Z, A, B, C, U, V, W)	Result of measurement of the touch probe cycles 0 and 1 without probe radius or probe length compensation
	4	1 to 9 (X, Y, Z, A, B, C, U, V, W)	Last reference point of a manual touch probe cycle, or last touch point from Cycle 0 without probe length or stylus probe compensation (workpiece coordinate system)
	10	-	Oriented spindle stop
	11	-	Error status for suppressed error message 0 = Probe process successful -1 = Touch point not reached
Value from the active datum table in the active coordinate system, 500	Line	Column	Read values
Basic transformation, 507	Line	1 to 6 (X, Y, Z, SPA, SPB, SPC)	Read the basic transformation of a preset
Axis offset, 508	Line	1 to 9 (X_OFFS, Y_OFFS, Z_OFFS, A_OFFS, B_OFFS, C_OFFS, U_OFFS, V_OFFS, W_OFFS)	Read the axis offset of a preset
Active preset, 530	1	-	Read the number of the active preset
Read data of the current tool, 950	1	-	Tool length L
	2	-	Tool radius R
	3	-	Tool radius R2
	4	-	Oversize for tool length DL
	5	-	Tool radius oversize DR
	6	-	Tool radius oversize DR2
	7	-	Tool locked TL 0 = not locked, 1 = locked
	8	-	Number of the replacement tool RT
	9	-	Maximum tool age TIME1
	10	-	Maximum tool age TIME2
	11	-	Current tool age CUR. TIME
	12	-	PLC status
	13	-	Maximum tooth length LCUTS

Group name, ID no.	Number	Index	Meaning
	14	-	Maximum plunge angle ANGLE
	15	-	TT: Number of tool teeth CUT
	16	-	TT: Wear tolerance for length, LTOL
	17	-	TT: Wear tolerance for radius, RTOL
	18	-	TT: Direction of rotation DIRECT 0 = Positive, –1 = Negative
	19	-	TT: Offset in plane R-OFFS
	20	-	TT: Offset in length L-OFFS
	21	-	TT: Breakage tolerance for length, LBREAK
	22	-	TT: Breakage tolerance for radius, RBREAK
	23	-	PLC value
	24	-	Tool type TYP 0 = Milling cutter, 21 = Touch probe
	27	-	Corresponding line in the touch-probe table
	32	-	Tip angle
	34	-	Lift off
Touch probe cycles, 990	1	-	Approach behaviour: 0 = Standard behavior 1 = Effective radius, Safety clearance zero
	2	-	0 = Pushbutton monitoring off 1 = Pushbutton monitoring on
	4	-	0 = Stylus not deflected 1 = Stylus deflected
	8	-	Current spindle angle
Execution status, 992	10	-	Mid-program startup active 1 = Yes, 0 = No
	11	-	Search phase
	14	-	Number of the last FN14 error
	16	-	Real execution active 1 = Execution , 2 = Simulation
	31	-	Radius compensation in MDI mode with paraxial positioning blocks permitted 0 = Not permitted, 1 = Permitted

Example: Assign the value of the active scaling factor for the Z axis to Q25.

```
N55 D18 Q25 ID210 NR4 IDX3
```

D19 – Transfer values to the PLC

> **!** This function may only be used with the permission of your machine tool builder.

The **D19** function transfers up to two numerical values or Q parameters to the PLC.

D20 – NC and PLC synchronization

> **!** This function may only be used with the permission of your machine tool builder.

With the **D20** function you can synchronize the NC and PLC during a program run. The NC stops machining until the condition that you have programmed in the **D20** block is fulfilled.

SYNC is used whenever you read, for example, system data via **D18** that require synchronization with real time. The TNC stops the look-ahead calculation and executes the subsequent NC block only when the NC program has actually reached that block.

Example: Pause internal look-ahead calculation, read current position in the X axis

```
N32 D20 SYNC
N33 D18 Q1 ID270 NR1 IDX1
```

D29 – Transfer values to the PLC

> **!** This function may only be used with the permission of your machine tool builder.

The **D29** function transfers up to eight numerical values or Q parameters to the PLC.

D37 - EXPORT

> **!** This function may only be used with the permission of your machine tool builder.

You need the **D37** function if you want to create your own cycles and integrate them in the TNC.

9.9 Entering formulas directly

Entering formulas

You can enter mathematical formulas that include several operations directly into the part program by soft key.

Press the **FORMULA** soft key to call the mathematical functions. The TNC displays the following soft keys in several soft-key rows:

Soft key	Linking function
+	**Addition** e. g. **Q10 = Q1 + Q5**
-	**Subtraction** e. g. **Q25 = Q7 - Q108**
*	**Multiplication** e. g. **Q12 = 5 * Q5**
/	**Division** e. g. **Q25 = Q1 / Q2**
(	**Opening parenthesis** e. g. **Q12 = Q1 * (Q2 + Q3)**
)	**Closing parenthesis** e. g. **Q12 = Q1 * (Q2 + Q3)**
SQ	**Square** e. g. **Q15 = SQ 5**
SQRT	**Square root** e. g. **Q22 = SQRT 25**
SIN	**Sine of an angle** e. g. **Q44 = SIN 45**
COS	**Cosine of an angle** e. g. **Q45 = COS 45**
TAN	**Tangent of an angle** e. g. **Q46 = TAN 45**
ASIN	**Arc sine** Inverse function of the sine; determine the angle from the ratio of the opposite side to the hypotenuse e.g. **Q10 = ASIN 0.75**
ACOS	**Arc cosine** Inverse function of the cosine; determine the angle from the ratio of the adjacent side to the hypotenuse e. g. **Q11 = ACOS Q40**

Soft key	Linking function
ATAN	**Arc tangent** Inverse function of the tangent; determine the angle from the ratio of the opposite side to the adjacent side e.g. **Q12 = ATAN Q50**
^	**Powers of values** e g **Q15 = 3^3**
PI	**Constant PI (3.4159)** e.g. **Q15 = PI**
LN	**Natural logarithm (LN) of a number** Base 2.7183 e. g. **Q15 = LN Q11**
LOG	**Logarithm of a number, Base 10** e. g. **Q33 = LOG Q22**
EXP	**Exponential function, 2.7183 to the power of n** e. g. **Q1 = EXP Q12**
NEG	**Negate (multiplication by -1)** e.g. **Q2 = NEG Q1**
INT	**Truncate digits after the decimal point** Form an integer e.g. **Q3 = INT Q42**
ABS	**Absolute value of a number** e. g. **Q4 = ABS Q22**
FRAC	**Truncate digits before the decimal point** Form a fraction e.g. **Q5 = FRAC Q23**
SGN	**Check algebraic sign of a number** e g **Q12 = SGN Q50** When return value Q12 = 1, then Q50 >= 0 When return value Q12 = -1, then Q50 < 0
%	**Calculate modulo value (division remainder)** e. g. **Q12 = 400 % 360** Result: Q12 = 40

Rules for formulas

Mathematical formulas are programmed according to the following rules:

Higher-level operations are performed first

```
12 Q1 = 5 * 3 + 2 * 10 = 35
```

1 Calculation 5 * 3 = 15
2 Calculation 2 * 10 = 20
3 Calculation 15 + 20 = 35

or

```
13 Q2 = SQ 10 - 3^3 = 73
```

1 Calculation step 10 squared = 100
2 Calculation step 3 to the third power = 27
3 Calculation 100 – 27 = 73

Distributive law

Law of distribution with parentheses calculation
a * (b + c) = a * b + a * c

Example of entry

Calculate an angle with the arc tangent from the opposite side (Q12) and adjacent side (Q13); then store in Q25.

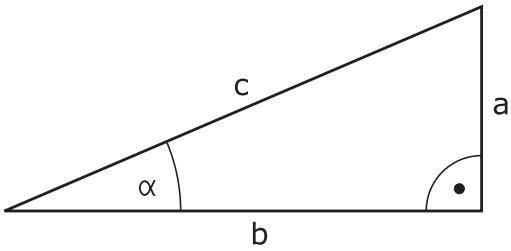

Q

FORMULA

- Select the formula entry function: Press the **Q** key and the **FORMULA** soft key, or use the shortcut

Q

- Press the **Q** key on the ASCII keyboard

PARAMETER NUMBER FOR RESULT?

ENT

- Enter **25** (parameter number) and press the **ENT** key

▷

ATAN

- Shift the soft-key row and select the arc tangent function

◁

(

- Shift the soft-key row and open the parentheses

Q

- Enter **12** (Q parameter number)

/

- Select division

Q

- Enter **13** (Q parameter number)

)

END

- Close parentheses and conclude formula entry

Example NC block

```
N10 Q25 = ATAN (Q12/Q13)
```

9.10 String parameters

String processing functions

You can use the **QS** parameters to create variable character strings. You can output such character strings for example through the **D16** function to create variable logs.

You can assign a linear sequence of characters (letters, numbers, special characters and spaces) up to a length of 255 characters to a string parameter. You can also check and process the assigned or imported values using the functions described below. As in Q parameter programming, you can use a total of 2000 QS parameters.

Further Information: Principle and overview of functions, page 298

The **STRING FORMULA** and **FORMULA** Q parameter functions contain various functions for processing the string parameters.

Soft key	STRING FORMULA functions	Page
STRING	Assigning string parameters	334
	Chain-linking string parameters	334
TOCHAR	Converting a numerical value to a string parameter	335
SUBSTR	Copy a substring from a string parameter	336

Soft key	FORMULA string functions	Page
TONUMB	Converting a string parameter to a numerical value	337
INSTR	Checking a string parameter	338
STRLEN	Finding the length of a string parameter	339
STRCOMP	Compare alphabetic priority	340

When you use a **STRING FORMULA**, the result of the arithmetic operation is always a string. When you use the **FORMULA** function, the result of the arithmetic operation is always a numeric value.

Assigning string parameters

You have to assign a string variable before you use it. Use the **DECLARE STRING** command to do so.

SPEC FCT
- Show the soft-key row with special functions

PROGRAM FUNCTIONS
- Open the function menu

STRING FUNCTIONS
- Select string functions

DECLARE STRING
- Select the **DECLARE STRING** function

Example NC block

```
N30 DECLARE STRING QS10 = "WORKPIECE"
```

Chain-linking string parameters

With the concatenation operator (string parameter **||** string parameter) you can make a chain of two or more string parameters.

SPEC FCT
- Show the soft-key row with special functions

PROGRAM FUNCTIONS
- Open the function menu

STRING FUNCTIONS
- Select string functions

STRING FORMULA
- Select the **STRING FORMULA** function
- Enter the number of the string parameter in which the TNC is to save the concatenated string. Confirm with the **ENT** key
- Enter the number of the string parameter in which the **first** substring is saved. Confirm with the **ENT** key: The TNC displays the concatenation symbol **||**
- Confirm your entry with the **ENT** key
- Enter the number of the string parameter in which the **second** substring is saved. Confirm with the **ENT** key
- Repeat the process until you have selected all the required substrings. Conclude with the **END** key

Example: QS10 is to include the complete text of QS12, QS13 and QS14

```
N37 QS10 = QS12 || QS13 || QS14
```

Parameter contents:

- **QS12**: **Workpiece**
- **QS13**: **Status:**
- **QS14**: **Scrap**
- **QS10**: **Workpiece Status: Scrap**

Converting a numerical value to a string parameter

With the **TOCHAR** function, the TNC converts a numerical value to a string parameter. This enables you to chain numerical values with string variables.

SPEC FCT
- Show the soft-key row with special functions

PROGRAM FUNCTIONS
- Open the function menu

STRING FUNCTIONS
- Select string functions

STRING FORMULA
- Select the **STRING FORMULA** function

TOCHAR
- Select the function for converting a numerical value to a string parameter
- Enter the number or the desired Q parameter to be converted, and confirm with the **ENT** key
- If desired, enter the number of decimal places that the TNC should convert, and confirm with the **ENT** key
- Close the parenthetical expression with the **ENT** key and confirm your entry with the **END** key

Example: Convert parameter Q50 to string parameter QS11, use 3 decimal places

```
N37 QS11 = TOCHAR ( DAT+Q50 DECIMALS3 )
```

Copying a substring from a string parameter

The **SUBSTR** function copies a definable range from a string parameter.

SPEC FCT
- Show the soft-key row with special functions

PROGRAM FUNCTIONS
- Open the function menu

STRING FUNCTIONS
- Select string functions

STRING FORMULA
- Select the **STRING FORMULA** function
- Enter the number of the string parameter in which the TNC is to save the copied string and confirm with the **ENT** key

SUBSTR
- Select the function for cutting out a substring
- Enter the number of the QS parameter from which the substring is to be copied and confirm with the **ENT** key
- Enter the number of the place starting from which the substring is to be copied and confirm with the **ENT** key
- Enter the number of characters to be copied and confirm with the **ENT** key
- Close the parenthetical expression with the **ENT** key and confirm your entry with the **END** key

Remember that the first character of a text sequence starts internally with the zeroth place.

Example: A four-character substring (LEN4) is read from the string parameter QS10 beginning with the third character (BEG2)

```
N37 QS13 = SUBSTR ( SRC_QS10 BEG2 LEN4 )
```

Converting a string parameter to a numerical value

The **TONUMB** function converts a string parameter to a numerical value. The value to be converted should be only numerical.

> The QS parameter must contain only one numerical value. Otherwise the TNC will output an error message.

Q

- Select Q-parameter functions

FORMULA

- Select the **FORMULA** function
- Enter the number of the parameter in which the TNC is to save the numerical value. Confirm with the **ENT** key

◁

- Shift the soft-key row

TONUMB

- Select the function for converting a string parameter to a numerical value
- Enter the number of the QS parameter to be converted, and confirm with the **ENT** key
- Close the parenthetical expression with the **ENT** key and confirm your entry with the **END** key

Example: Convert string parameter QS11 to a numerical parameter Q82

```
N37 Q82 = TONUMB ( SRC_QS11 )
```

Checking a string parameter

The **INSTR** function checks whether a string parameter is contained in another string parameter.

Q

- Select Q-parameter functions

FORMULA

- Select the **FORMULA** function
- Enter the number of the Q parameter for the result and confirm with the **ENT** key. The TNC saves in the parameter the position at which the sought-after text begins

◁

- Shift the soft-key row

INSTR

- Select the function for checking a string parameter
- Enter the number of the QS parameter in which the text to be searched for is saved. Confirm with the **ENT** key
- Enter the number of the QS parameter to be searched, and confirm with the **ENT** key
- Enter the number of the place starting from which the TNC is to search the substring, and confirm with the **ENT** key
- Close the parenthetical expression with the **ENT** key and confirm your entry with the **END** key

Remember that the first character of a text sequence starts internally with the zeroth place.

If the TNC cannot find the required substring, it will save the total length of the string to be searched (counting starts at 1) in the result parameter.

If the substring is found in more than one place, the TNC returns the first place at which it finds the substring.

Example: Search through QS10 for the text saved in parameter QS13. Begin the search at the third place.

```
N37 Q50 = INSTR ( SRC_QS10 SEA_QS13 BEG2 )
```

Finding the length of a string parameter

The **STRLEN** function returns the length of the text saved in a selectable string parameter.

Q

- Select Q parameter function

FORMULA

- Select the **FORMULA** function
- Enter the number of the Q parameter in which the TNC is to save the ascertained string length. Confirm with the **ENT** key

◁

- Shift the soft-key row

STRLEN

- Select the function for finding the text length of a string parameter
- Enter the number of the QS parameter whose length the TNC is to ascertain and confirm with the **ENT** key
- Close the parenthetical expression with the **ENT** key and confirm your entry with the **END** key

Example: Find the length of QS15

```
N37 Q52 = STRLEN ( SRC_QS15 )
```

Comparing alphabetic sequence

The **STRCOMP** function compares string parameters for alphabetic priority.

Q

- Select Q parameter function

FORMULA

- Select the **FORMULA** function
- Enter the number of the Q parameter in which the TNC is to save the result of the comparison and confirm with the **ENT** key

◁

- Shift the soft-key row

STRCOMP

- Select the function for comparing string parameters
- Enter the number of the first QS parameter to be compared and confirm with the **ENT** key
- Enter the number of the second QS parameter to be compared and confirm with the **ENT** key
- Close the parenthetical expression with the **ENT** key and confirm your entry with the **END** key

The TNC returns the following results:

- **0**: The compared QS parameters are identical
- **-1**: The first QS parameter **precedes** the second QS parameter alphabetically
- **+1:** The first QS parameter **follows** the second QS parameter alphabetically

Example: QS12 and QS14 are compared for alphabetic priority

```
N37 Q52 = STRCOMP ( SRC_QS12 SEA_QS14 )
```

Reading out machine parameters

Use the **CFGREAD** function to read out TNC machine parameters as numerical values or as strings.

In order to read out a machine parameter, you must use the TNC's configuration editor to determine the parameter name, parameter object, and, if they have been assigned, the group name and index:

Icon	Type	Meaning	Example
	Key	Group name of the machine parameter (if assigned)	CH_NC
	Entity	Parameter object (the name starts with "**Cfg**...")	CfgGeoCycle
	Attribute	Name of the machine parameter	displaySpindleErr
	Index	List index of a machine parameter (if assigned)	[0]

If you are in the configuration editor for the user parameters, you can change the display of the existing parameters. In the default setting, the parameters are displayed with short, explanatory texts. To display the actual system names of the parameters, press the key for the screen layout key and then the **SHOW SYSTEM NAME** soft key. Follow the same procedure to return to the standard display.

Each time you want to interrogate a machine parameter with the **CFGREAD** function, you must first define a QS parameter with attribute, entity and key.

The following parameters are read in the CFGREAD function's dialog:

- **KEY_QS**: Group name (key) of the machine parameter
- **TAG_QS**: Object name (entity) of the machine parameter
- **ATR_QS**: Name (attribute) of the machine parameter
- **IDX**: Index of the machine parameter

Reading a string of a machine parameter

In order to store the content of a machine parameter as a string in a QS parameter:

Q

- Press the **Q** key.

STRING FORMULA

- Select the **STRING FORMULA** function
- Enter the number of the string parameter in which the TNC is to save the machine parameter. Confirm with the **ENT** key
- Select the **CFGREAD** function
- Enter the numbers of the string parameters for the key, entity and attribute, then confirm with the **ENT** key
- Enter the number for the index, or skip the dialog with N**NO ENT**, whichever applies
- Close the parenthetical expression with the **ENT** key and confirm your entry with the **END** key

Example: Read as a string the axis designation of the fourth axis

Parameter settings in the configuration editor

DisplaySettings

CfgDisplayData

axisDisplayOrder

[0] to [5]

14 DECLARE STRINGQS11 = ""	Assign string parameter for key
15 DECLARE STRINGQS12 = "CFGDISPLAYDATA"	Assign string parameter for entity
16 DECLARE STRINGQS13 = "AXISDISPLAYORDER"	Assign string parameter for parameter name
17 QS1 = CFGREAD(KEY_QS11 TAG_QS12 ATR_QS13 IDX3)	Read out machine parameter

Reading a numerical value of a machine parameter

Store the value of a machine parameter as a numerical value in a Q parameter:

Q

- Select Q-parameter functions

FORMULA

- Select the **FORMULA** function
- Enter the number of the Q parameter in which the TNC is to save the machine parameter. Confirm with the **ENT** key
- Select the **CFGREAD** function
- Enter the numbers of the string parameters for the key, entity and attribute, then confirm with the **ENT** key
- Enter the number for the index, or skip the dialog with N**NO ENT**, whichever applies
- Close the parenthetical expression with the **ENT** key and confirm your entry with the **END** key

Example: Read overlap factor as Q parameter

Parameter settings in the configuration editor

ChannelSettings

CH_NC

CfgGeoCycle

pocketOverlap

N10 DECLARE STRINGQS11 = "CH_NC"	Assign string parameter for key
N20 DECLARE STRINGQS12 = "CFGGEOCYCLE"	Assign string parameter for entity
N30 DECLARE STRINGQS13 = "POCKETOVERLAP"	Assign string parameter for parameter name
N40 Q50 = CFGREAD(KEY_QS11 TAG_QS12 ATR_QS13)	Read out machine parameter

9.11 Preassigned Q parameters

The Q parameters Q100 to Q199 are assigned values by the TNC. The following types of information are assigned to Q parameters:

- Values from the PLC
- Tool and spindle data
- Data on operating status
- Results of measurements from touch probe cycles etc.

The TNC saves the values for the preassigned Q parameters Q108, Q114 and Q115 to Q117 in the unit of measure used by the active program.

> Do not use preassigned Q parameters (or QS parameters) between **Q100** and **Q199 (QS100** and **QS199)** as calculation parameters in NC programs. Otherwise you might receive undesired results.

Values from the PLC: Q100 to Q107

The TNC uses the parameters Q100 to Q107 to transfer values from the PLC to an NC program.

Active tool radius: Q108

The active value of the tool radius is assigned to Q108. Q108 is calculated from:

- Tool radius R (tool table or **G99** block)
- Delta value DR from the tool table
- Delta value DR from the **T** block

> The TNC remembers the current tool radius even if the power is interrupted.

Tool axis: Q109

The value of Q109 depends on the current tool axis:

Tool axis	Parameter value
No tool axis defined	Q109 = –1
X axis	Q109 = 0
Y axis	Q109 = 1
Z axis	Q109 = 2
U axis	Q109 = 6
V axis	Q109 = 7
W axis	Q109 = 8

Spindle status: Q110

The value of the parameter Q110 depends on the M function last programmed for the spindle.

M function	Parameter value
No spindle status defined	Q110 = –1
M3: Spindle ON, clockwise	Q110 = 0
M4: Spindle ON, counterclockwise	Q110 = 1
M5 after M3	Q110 = 2
M5 after M4	Q110 = 3

Coolant on/off: Q111

M function	Parameter value
M8: Coolant ON	Q111 = 1
M9: Coolant OFF	Q111 = 0

Overlap factor: Q112

The overlap factor for pocket milling is assigned to Q112.

Unit of measurement for dimensions in the program: Q113

During nesting with **PGM CALL**, the value of the parameter Q113 depends on the dimensional data of the program from which the other programs are called.

Dimensional data of the main program	Parameter value
Metric system (mm)	Q113 = 0
Imperial system (inch)	Q113 = 1

Tool length: Q114

The current value for the tool length is assigned to Q114.

The TNC remembers the current tool length even if the power is interrupted.

Coordinates after probing during program run

The parameters Q115 to Q119 contain the coordinates of the spindle position at the moment of contact during programmed measurement with the 3-D touch probe. The coordinates refer to the datum point that is active in the **Manual Operation** mode.

The length of the stylus and the radius of the ball tip are not compensated in these coordinates.

Coordinate axis	Parameter value
X axis	Q115
Y axis	Q116
Z axis	Q117
4th axis Machine-dependent	Q118
5th axis Machine-dependent	Q119

Deviation between actual value and nominal value during automatic tool measurement with the TT 130

Deviation of actual from nominal value	Parameter value
Tool length	Q115
Tool radius	Q116

Tilting the working plane with mathematical angles: rotary axis coordinates calculated by the TNC

Coordinates	Parameter value
A axis	Q120
B axis	Q121
C axis	Q122

Measurement results from touch probe cycles Further information: Cycle Programming User's Manual

Measured actual values	Parameter value
Angle of a straight line	Q150
Center in reference axis	Q151
Center in minor axis	Q152
Diameter	Q153
Pocket length	Q154
Pocket width	Q155
Length of the axis selected in the cycle	Q156
Position of the centerline	Q157
Angle in the A axis	Q158
Angle in the B axis	Q159
Coordinate of the axis selected in the cycle	Q160

Measured deviation	Parameter value
Center in reference axis	Q161
Center in minor axis	Q162
Diameter	Q163
Pocket length	Q164
Pocket width	Q165
Measured length	Q166
Position of the centerline	Q167

Determined space angle	Parameter value
Rotation about the A axis	Q170
Rotation about the B axis	Q171
Rotation about the C axis	Q172

Workpiece status	Parameter value
Good	Q180
Rework	Q181
Scrap	Q182

Tool measurement with the BLUM laser	Parameter value
Reserved	Q190
Reserved	Q191
Reserved	Q192
Reserved	Q193

Reserved for internal use	Parameter value
Marker for cycles	Q195
Marker for cycles	Q196
Marker for cycles (machining patterns)	Q197
Number of the last active measuring cycle	Q198

Status of tool measurement with TT	Parameter value
Tool within tolerance	Q199 = 0.0
Tool is worn (LTOL/RTOL is exceeded)	Q199 = 1.0
Tool is broken (LBREAK/RBREAK is exceeded)	Q199 = 2.0

Checking the setup situation: Q601

The value of the parameter Q601 indicates the status of the camera-based monitoring of the VSC setup situation.

Status	Parameter value
No error	Q601 = 1
Error	Q601 = 2
No monitoring area defined or not enough reference images	Q601 = 3
Internal errs (no signal, camera fault, etc)	Q601 = 10

9.12 Programming examples

Example: Ellipse

Program sequence

- The contour of the ellipse is approximated by many short lines (defined in Q7). The more calculation steps you define for the lines, the smoother the curve becomes.
- The milling direction is determined with the starting angle and end angle in the plane :
  Machining direction is clockwise:
  Starting angle > end angle
  Machining direction is counterclockwise:
  Starting angle < end angle
- The tool radius is not taken into account

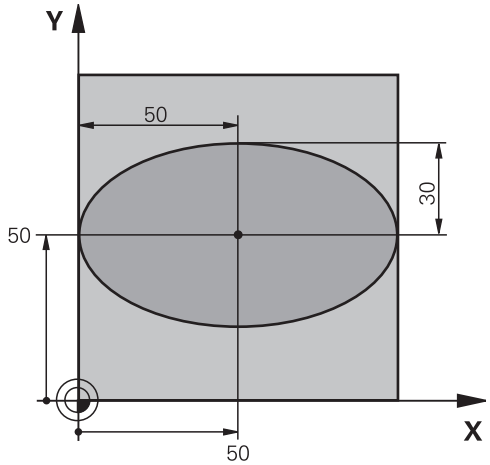

%ELLIPSE G71 *	
N10 D00 Q1 P01 +50 *	Center in X axis
N20 D00 Q2 P01 +50 *	Center in Y axis
N30 D00 Q3 P01 +50 *	Semiaxis in X
N40 D00 Q4 P01 +30 *	Semiaxis in Y
N50 D00 Q5 P01 +0 *	Starting angle in the plane
N60 D00 Q6 P01 +360 *	End angle in the plane
N70 D00 Q7 P01 +40 *	Number of calculation steps
N80 D00 Q8 P01 +30 *	Rotational position of the ellipse
N90 D00 Q9 P01 +5 *	Milling depth
N100 D00 Q10 P01 +100 *	Feed rate for plunging
N110 D00 Q11 P01 +350 *	Feed rate for milling
N120 D00 Q12 P01 +2 *	Set-up clearance for pre-positioning
N130 G30 G17 X+0 Y+0 Z-20 *	Definition of workpiece blank
N140 G31 G90 X+100 Y+100 Z+0 *	
N150 T1 G17 S4000 *	Tool call
N160 G00 G40 G90 Z+250 *	Retract the tool
N170 L10.0 *	Call machining operation
N180 G00 Z+250 M2 *	Retract the tool, end program
N190 G98 L10 *	Subprogram 10: Machining operation
N200 G54 X+Q1 Y+Q2 *	Shift datum to center of ellipse
N210 G73 G90 H+Q8 *	Account for rotational position in the plane
N220 Q35 = (Q6 - Q5) / Q7 *	Calculate angle increment
N230 D00 Q36 P01 +Q5 *	Copy starting angle
N240 D00 Q37 P01 +0 *	Set counter
N250 Q21 = Q3 * COS Q36 *	Calculate X coordinate for starting point
N260 Q22 = Q4 * SIN Q36 *	Calculate Y coordinate for starting point

N270 G00 G40 X+Q21 Y+Q22 M3 *	Move to starting point in the plane
N280 Z+Q12 *	Pre-position in spindle axis to set-up clearance
N290 G01 Z-Q9 FQ10 *	Move to working depth
N300 G98 L1 *	
N310 Q36 = Q36 + Q35 *	Update the angle
N320 Q37 = Q37 + 1 *	Update the counter
N330 Q21 = Q3 * COS Q36 *	Calculate the current X coordinate
N340 Q22 = Q4 * SIN Q36 *	Calculate the current Y coordinate
N350 G01 X+Q21 Y+Q22 FQ11 *	Move to next point
N360 D12 P01 +Q37 P02 +Q7 P03 1 *	Unfinished? If not finished, return to LBL 1
N370 G73 G90 H+0 *	Reset the rotation
N380 G54 X+0 Y+0 *	Reset the datum shift
N390 G00 G40 Z+Q12 *	Move to set-up clearance
N400 G98 L0 *	End of subprogram
N99999999 %ELLIPSE G71 *	

Example: Concave cylinder machined with spherical cutter

Program sequence

- This program functions only with a spherical cutter. The tool length refers to the sphere center.
- The contour of the cylinder is approximated by many short line segments (defined in Q13). The more line segments you define, the smoother the curve becomes.
- The cylinder is milled in longitudinal cuts (here: parallel to the Y axis).
- The milling direction is determined with the starting angle and end angle in space :
  Machining direction clockwise:
  Starting angle > end angle
  Machining direction counterclockwise:
  Starting angle < end angle
- The tool radius is compensated automatically

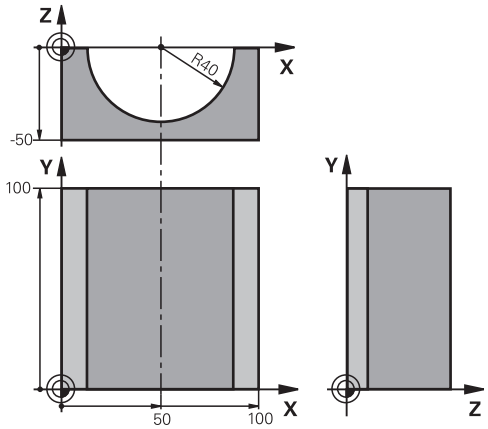

%CYLIN G71 *	
N10 D00 Q1 P01 +50 *	Center in X axis
N20 D00 Q2 P01 +0 *	Center in Y axis
N30 D00 Q3 P01 +0 *	Center in Z axis
N40 D00 Q4 P01 +90 *	Starting angle in space (Z/X plane)
N50 D00 Q5 P01 +270 *	End angle in space (Z/X plane)
N60 D00 Q6 P01 +40 *	Cylinder radius
N70 D00 Q7 P01 +100 *	Length of the cylinder
N80 D00 Q8 P01 +0 *	Rotational position in the X/Y plane
N90 D00 Q10 P01 +5 *	Allowance for cylinder radius
N100 D00 Q11 P01 +250 *	Feed rate for plunging
N110 D00 Q12 P01 +400 *	Feed rate for milling
N120 D00 Q13 P01 +90 *	Number of cuts
N130 G30 G17 X+0 Y+0 Z-50 *	Definition of workpiece blank
N140 G31 G90 X+100 Y+100 Z+0 *	
N150 T1 G17 S4000 *	Tool call
N160 G00 G40 G90 Z+250 *	Retract the tool
N170 L10.0 *	Call machining operation
N180 D00 Q10 P01 +0 *	Reset allowance
N190 L10.0	Call machining operation
N200 G00 G40 Z+250 M2 *	Retract the tool, end program
N210 G98 L10 *	Subprogram 10: Machining operation
N220 Q16 = Q6 - Q10 - Q108 *	Account for allowance and tool, based on the cylinder radius
N230 D00 Q20 P01 +1 *	Set counter
N240 D00 Q24 P01 +Q4 *	Copy starting angle in space (Z/X plane)
N250 Q25 = (Q5 - Q4) / Q13 *	Calculate angle increment
N260 G54 X+Q1 Y+Q2 Z+Q3 *	Shift datum to center of cylinder (X axis)

N270 G73 G90 H+Q8 *	Account for rotational position in the plane
N280 G00 G40 X+0 Y+0 *	Pre-position in the plane to the cylinder center
N290 G01 Z+5 F1000 M3 *	Pre-position in the spindle axis
N300 G98 L1 *	
N310 I+0 K+0 *	Set pole in the Z/X plane
N320 G11 R+Q16 H+Q24 FQ11 *	Move to starting position on cylinder, plunge-cutting obliquely into the material
N330 G01 G40 Y+Q7 FQ12 *	Longitudinal cut in Y+ direction
N340 D01 Q20 P01 +Q20 P02 +1 *	Update the counter
N350 D01 Q24 P01 +Q24 P02 +Q25 *	Update solid angle
N360 D11 P01 +Q20 P02 +Q13 P03 99 *	Finished? If finished, jump to end
N370 G11 R+Q16 H+Q24 FQ11 *	Move in an approximated "arc" for the next longitudinal cut
N380 G01 G40 Y+0 FQ12 *	Longitudinal cut in Y– direction
N390 D01 Q20 P01 +Q20 P02 +1 *	Update the counter
N400 D01 Q24 P01 +Q24 P02 +Q25 *	Update solid angle
N410 D12 P01 +Q20 P02 +Q13 P03 1 *	Unfinished? If not finished, return to LBL 1
N420 G98 L99 *	
N430 G73 G90 H+0 *	Reset the rotation
N440 G54 X+0 Y+0 Z+0 *	Reset the datum shift
N450 G98 L0 *	End of subprogram
N99999999 %ZYLIN G71 *	

Example: Convex sphere machined with end mill

Program sequence

- This program requires an end mill.
- The contour of the sphere is approximated by many short lines (in the Z/X plane, defined in Q14). The smaller you define the angle increment, the smoother the curve becomes.
- You can determine the number of contour cuts through the angle increment in the plane (defined in Q18).
- The tool moves upward in three-dimensional cuts.
- The tool radius is compensated automatically

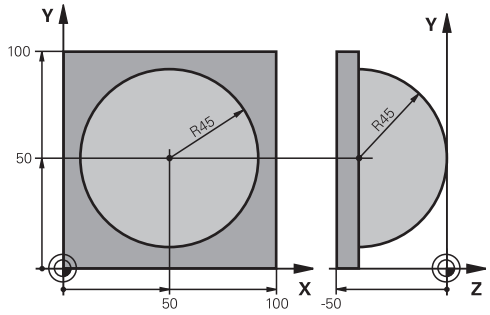

%SPHERE G71 *	
N10 D00 Q1 P01 +50 *	Center in X axis
N20 D00 Q2 P01 +50 *	Center in Y axis
N30 D00 Q4 P01 +90 *	Starting angle in space (Z/X plane)
N40 D00 Q5 P01 +0 *	End angle in space (Z/X plane)
N50 D00 Q14 P01 +5 *	Angle increment in space
N60 D00 Q6 P01 +45 *	Sphere radius
N70 D00 Q8 P01 +0 *	Starting angle of rotational position in the X/Y plane
N80 D00 Q9 P01 +360 *	End angle of rotational position in the X/Y plane
N90 D00 Q18 P01 +10 *	Angle increment in the X/Y plane for roughing
N100 D00 Q10 P01 +5 *	Allowance in sphere radius for roughing
N110 D00 Q11 P01 +2 *	Set-up clearance for pre-positioning in the spindle axis
N120 D00 Q12 P01 +350 *	Feed rate for milling
N130 G30 G17 X+0 Y+0 Z-50 *	Definition of workpiece blank
N140 G31 G90 X+100 Y+100 Z+0 *	
N150 T1 G17 S4000 *	Tool call
N160 G00 G40 G90 Z+250 *	Retract the tool
N170 L10.0 *	Call machining operation
N180 D00 Q10 P01 +0 *	Reset allowance
N190 D00 Q18 P01 +5 *	Angle increment in the X/Y plane for finishing
N200 L10.0 *	Call machining operation
N210 G00 G40 Z+250 M2 *	Retract the tool, end program
N220 G98 L10 *	Subprogram 10: Machining operation
N230 D01 Q23 P01 +Q11 P02 +Q6 *	Calculate Z coordinate for pre-positioning
N240 D00 Q24 P01 +Q4 *	Copy starting angle in space (Z/X plane)
N250 D01 Q26 P01 +Q6 P02 +Q108 *	Compensate sphere radius for pre-positioning
N260 D00 Q28 P01 +Q8 *	Copy rotational position in the plane
N270 D01 Q16 P01 +Q6 P02 -Q10 *	Account for allowance in the sphere radius
N280 G54 X+Q1 Y+Q2 Z-Q16 *	Shift datum to center of sphere
N290 G73 G90 H+Q8 *	Account for starting angle of rotational position in the plane
N300 G98 L1 *	Pre-position in the spindle axis
N310 I+0 J+0 *	Set pole in the X/Y plane for pre-positioning

N320 G11 G40 R+Q26 H+Q8 FQ12 *	Pre-position in the plane
N330 I+Q108 K+0 *	Set pole in the Z/X plane, offset by the tool radius
N340 G01 Y+0 Z+0 FQ12 *	Move to working depth
N350 G98 L2 *	
N360 G11 G40 R+Q6 H+Q24 FQ12 *	Move upward in an approximated "arc"
N370 D02 Q24 P01 +Q24 P02 +Q14 *	Update solid angle
N380 D11 P01 +Q24 P02 +Q5 P03 2 *	Inquire whether an arc is finished. If not finished, return to LBL 2
N390 G11 R+Q6 H+Q5 FQ12 *	Move to the end angle in space
N400 G01 G40 Z+Q23 F1000 *	Retract in the spindle axis
N410 G00 G40 X+Q26 *	Pre-position for next arc
N420 D01 Q28 P01 +Q28 P02 +Q18 *	Update rotational position in the plane
N430 D00 Q24 P01 +Q4 *	Reset solid angle
N440 G73 G90 H+Q28 *	Activate new rotational position
N450 D12 P01 +Q28 P02 +Q9 P03 1 *	Unfinished? If not finished, return to LBL 1
N460 D09 P01 +Q28 P02 +Q9 P03 1 *	
N470 G73 G90 H+0 *	Reset the rotation
N480 G54 X+0 Y+0 Z+0 *	Reset the datum shift
N490 G98 L0 *	End of subprogram
N99999999 %SPHERE G71 *	

10

Programming: Miscellaneous Functions

10.1 Enter miscellaneous functions M and STOP

Fundamentals

With the TNC's miscellaneous functions—also called M functions—you can affect

- the program run, e.g. a program interruption
- the machine functions, such as switching spindle rotation and coolant supply on and off
- the path behavior of the tool

The machine tool builder may add some M functions that are not described in this User's Manual. Refer to your machine manual.

You can enter up to four M (miscellaneous) functions at the end of a positioning block or in a separate block. The TNC displays the following dialog question: **Miscellaneous function M?**

You usually enter only the number of the miscellaneous function in the programming dialog. Some miscellaneous functions can be programmed with additional parameters. In this case, the dialog is continued for the parameter input.

In the **Manual Operation** and **El. Handwheel** operating modes, the M functions are entered with the **M** soft key.

Effectiveness of miscellaneous functions

Please note that some miscellaneous functions become effective at the start of a positioning block, and others at the end, regardless of their position in the NC block.

Miscellaneous functions come into effect in the block in which they are called.

Some miscellaneous functions are effective only in the block in which they are programmed. Unless the miscellaneous function is only effective blockwise, either you must cancel it in a subsequent block with a separate M function, or it is automatically canceled by the TNC at the end of the program.

If several M functions are programmed in one NC block, then the execution sequence is as follows:

- M functions taking effect at the start of the block are executed before those taking effect at the end of the block
- If all M functions take effect at the start or end of block, execution take place in the sequence programmed

Entering a miscellaneous function in a STOP block

If you program a **STOP** block, the program run or test run is interrupted at the block, e.g. for a tool inspection. You can also enter an M (miscellaneous) function in a **STOP** block:

STOP

- To program an interruption of program run, press the **STOP** key
- Enter a miscellaneous function **M**

Example NC blocks

```
N87 G38 M6
```

10.2 Miscellaneous functions for program run inspection, spindle and coolant

Overview

The machine manufacturer can influence the behavior of the miscellaneous functions described below. Refer to your machine manual.

M	Effect	Effective at block	Start	End
M0	Program STOP Spindle STOP			■
M1	Optional program STOP Spindle STOP if necessary Coolant OFF if necessary (not effective during Test Run, function determined by the machine tool builder)			■
M2	STOP program run Spindle STOP Coolant off Return jump to block 1 Clear status display Functional scope depends on machine parameter **clearMode** (no.100901)			■
M3	Spindle ON clockwise		■	
M4	Spindle ON counterclockwise		■	
M5	Spindle STOP			■
M6	Tool change Spindle STOP Program STOP			■
M8	Coolant ON		■	
M9	Coolant OFF			■
M13	Spindle ON clockwise Coolant ON		■	
M14	Spindle ON counterclockwise Coolant ON		■	
M30	Same as M2			■

10.3 Miscellaneous functions for coordinate entries

Programming machine-referenced coordinates: M91/M92

Scale datum

On the scale, a reference mark indicates the position of the scale datum.

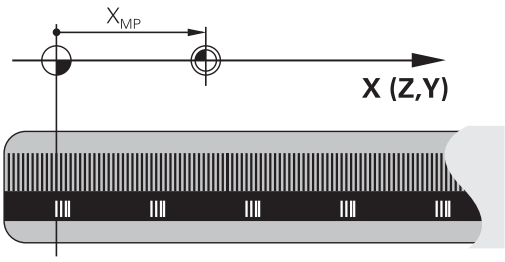

Machine datum

The machine datum is required for the following tasks:

- Define the axis traverse limits (software limit switches)
- Approach machine-referenced positions (e.g. tool change positions)
- Set a workpiece datum

The distance in each axis from the scale datum to the machine datum is defined by the machine manufacturer in a machine parameter.

Standard behavior

The TNC references coordinates to the workpiece datum.

Further Information: Datum setting without a 3-D touch probe, page 518

Behavior with M91 – Machine datum

If you want the coordinates in a positioning block to be referenced to the machine datum, end the block with M91.

> If you program incremental coordinates in an M91 block, enter them with respect to the last programmed M91 position. If no M91 position is programmed in the active NC block, then enter the coordinates with respect to the current tool position.

The coordinate values on the TNC screen are referenced to the machine datum. Switch the display of coordinates in the status display to REF.

Further Information: Status displays, page 80

Behavior with M92 – Additional machine datum

In addition to the machine datum, the machine tool builder can also define an additional machine-based position as a reference point.

For each axis, the machine tool builder defines the distance between the machine datum and this additional machine datum. Refer to your machine manual.

If you want the coordinates in positioning blocks to be based on the additional machine datum, end these block with M92.

Radius compensation remains the same in blocks that are programmed with M91 or M92. The tool length, however, is **not** compensated.

Effect

M91 and M92 are effective only in the blocks in which M91 and M92 have been programmed.

M91 and M92 take effect at the start of block.

Workpiece datum

If you want the coordinates to always be referenced to the machine datum, you can block datum setting for one or more axes.

If datum setting is inhibited for all axes, the TNC no longer displays the **DATUM SET** soft key in the **Manual operation** mode.

The figure shows coordinate systems with the machine and workpiece datum.

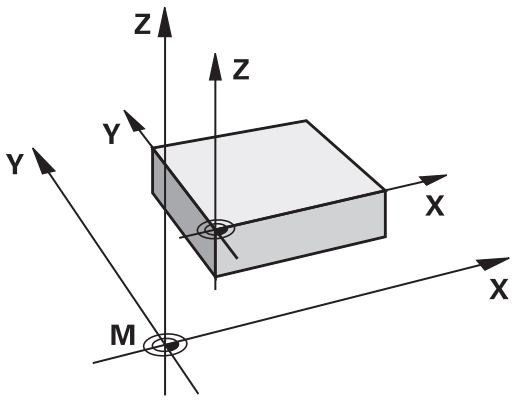

M91/M92 in the Test Run mode

In order to be able to graphically simulate M91/M92 movements, you need to activate working space monitoring and display the workpiece blank referenced to the set datum.

Further Information: Showing the workpiece blank in the working space , page 577

Moving to positions in a non-tilted coordinate system with a tilted working plane: M130

Standard behavior with a tilted working plane

The TNC references coordinates in the positioning blocks to the tilted coordinate system.

Behavior with M130

The TNC references coordinates in straight line blocks with an active tilted working plane to the untilted coordinate system.

The TNC then positions the (tilted) tool to the programmed coordinates of the untilted system.

> **!** **Danger of collision!**
> Subsequent positioning blocks or fixed cycles are carried out in a tilted coordinate system. This can lead to problems in fixed cycles with absolute pre-positioning.
> The function M130 is allowed only if the tilted working plane function is active.

Effect

M130 functions blockwise in straight-line blocks without tool radius compensation.

10.4 Miscellaneous functions for path behavior

Machining small contour steps: M97

Standard behavior

The TNC inserts a transition arc at outside corners. If the contour steps are very small, however, the tool would damage the contour

In such cases the TNC interrupts program run and generates the error message "Tool radius too large."

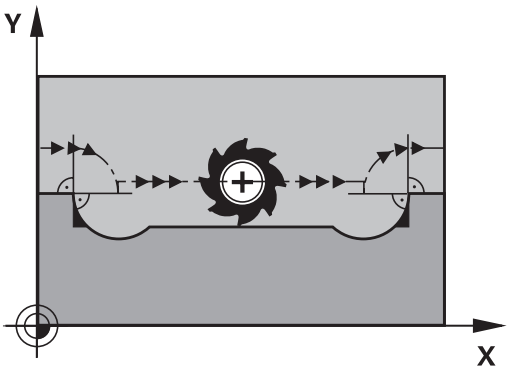

Behavior with M97

The TNC calculates the intersection of the contour elements—as at inside corners—and moves the tool over this point.

Program M97 in the same block as the outside corner.

> Instead of **M97** you should use the much more powerful function **M120 LA**. **Further Information:** Calculating the radius-compensated path in advance (LOOK AHEAD): M120 , page 367

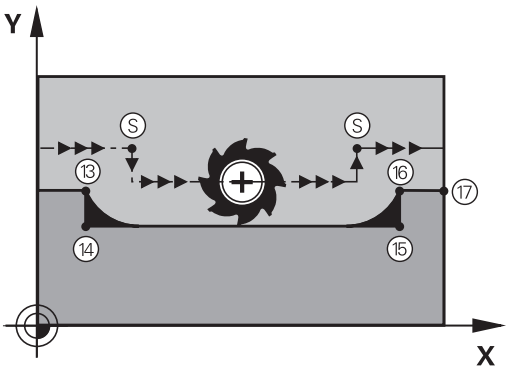

Effect

M97 is effective only in the blocks in which it is programmed.

> A corner machined with M97 will not be completely finished. You may wish to rework the contour with a smaller tool.

Example NC blocks

N50 G99 G01 ... R+20 *	Large tool radius
...	
N130 X ... Y ... F ... M97 *	Move to contour point 13
N140 G91 Y-0.5 ... F ... *	Machine small contour step 13 to 14
N150 X+100 ... *	Move to contour point 15
N160 Y+0.5 ... F ... M97 *	Machine small contour step 15 to 16
N170 G90 X ... Y ... *	Move to contour point 17

Machining open contour corners: M98

Standard behavior

The TNC calculates the intersections of the cutter paths at inside corners and moves the tool in the new direction at those points.

If the contour is open at the corners, however, this will result in incomplete machining.

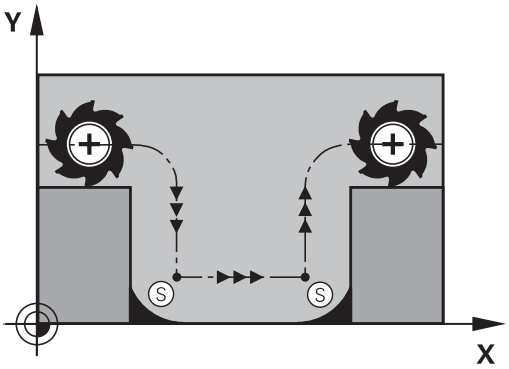

Behavior with M98

With the miscellaneous function M98, the TNC temporarily suspends radius compensation to ensure that both corners are completely machined:

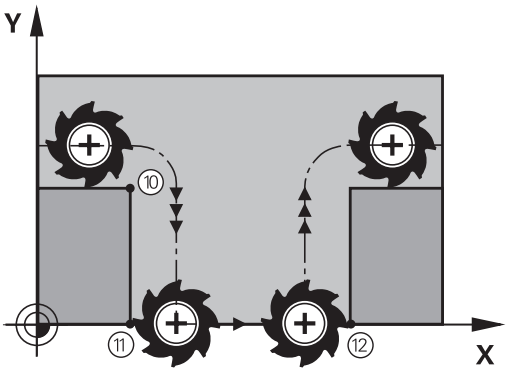

Effect

M98 is effective only in the blocks in which it is programmed.

M98 takes effect at the end of block.

Example NC blocks

Move to the contour points 10, 11 and 12 in succession:

```
N100 G01 G41 X ... Y ... F ... *
N110 X ... G91 Y ... M98 *
N120 X+ ... *
```

Feed rate factor for plunging movements: M103

Standard behavior

The TNC moves the tool at the last programmed feed rate, regardless of the direction of traverse.

Behavior with M103

The TNC reduces the feed rate when the tool moves in the negative direction of the tool axis. The feed rate for plunging FZMAX is calculated from the last programmed feed rate FPROG and a factor F%:

FZMAX = FPROG x F%

Programming M103

If you enter M103 in a positioning block, the TNC continues the dialog by asking you the factor F.

Effect

M103 becomes effective at the start of block.
To cancel M103, program M103 once again without a factor.

> M103 is also effective in an active tilted working plane. The feed rate reduction is then effective during traverse in the negative direction of the **tilted** tool axis.

Example NC blocks

The feed rate for plunging is to be 20% of the feed rate in the plane.

...	Actual contouring feed rate (mm/min):
N170 G01 G41 X+20 Y+20 F500 M103 F20 *	500
N180 Y+50 *	500
N190 G91 Z-2.5 *	100
N200 Y+5 Z-5 *	141
N210 X+50 *	500
N220 G90 Z+5 *	500

Feed rate in millimeters per spindle revolution: M136

Standard behavior

The TNC moves the tool at the programmed feed rate F in mm/min

Behavior with M136

> In inch-programs, M136 is not permitted in combination with the new alternate feed rate FU.
>
> The spindle is not permitted to be controlled when M136 is active.

With M136, the TNC does not move the tool in mm/min, but rather at the programmed feed rate F in millimeters per spindle revolution. If you change the spindle speed by using the spindle override, the TNC changes the feed rate accordingly.

Effect

M136 becomes effective at the start of block.

You can cancel M136 by programming M137.

Feed rate for circular arcs: M109/M110/M111

Standard behavior

The TNC applies the programmed feed rate to the path of the tool center.

Behavior at circular arcs with M109

The TNC adjusts the feed rate for circular arcs at inside and outside contours so that the feed rate at the tool cutting edge remains constant.

> **Caution: Danger to the workpiece and tool!**
> On very small outside corners the TNC may increase the feed rate so much that the tool or workpiece may be damaged. Avoid **M109** with small outside corners.

Behavior at circular arcs with M110

The TNC keeps the feed rate constant for circular arcs at inside contours only. Adjustment of the feed rate does not have any effect when machining the outside contours of circular arcs.

> If you define M109 or M110 before calling a machining cycle with a number greater than 200, the adjusted feed rate is also effective for circular arcs within these machining cycles. The initial state is restored after finishing or canceling a machining cycle.

Effect

M109 and M110 become effective at the start of block. To cancel M109 or M110, enter M111.

Calculating the radius-compensated path in advance (LOOK AHEAD): M120

Standard behavior

If the tool radius is larger than the contour step that is to be machined with radius compensation, the TNC interrupts program run and generates an error message. M97" suppresses the error message, but it results in dwell marks and will also move the corner.

Further Information: Machining small contour steps: M97, page 362

If the programmed contour contains undercut features, the tool may damage the contour.

Behavior with M120

The TNC checks radius-compensated contours for undercuts and tool path intersections, and calculates the tool path in advance from the current block. Areas of the contour that might be damaged by the tool are not machined (dark areas in figure). You can also use M120 to calculate the tool radius compensation for digitized data or data created on an external programming system. This means that deviations from the theoretical tool radius can be compensated.

Use LA (**L**ook **A**head) behind M120 to define the number of blocks (maximum: 99) that you want the TNC to calculate in advance. Note that the larger the number of blocks you choose, the higher the block processing time will be.

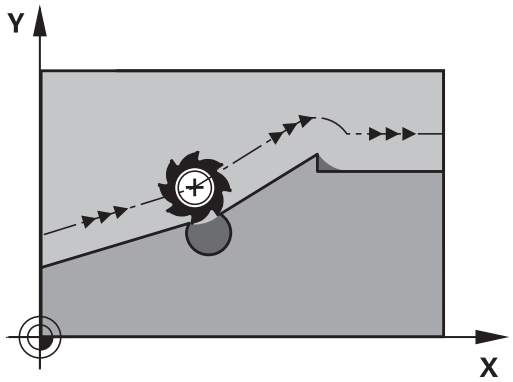

Input

If you enter M120 in a positioning block, the TNC continues the dialog for this block by asking you the number of blocks LA that are to be calculated in advance.

Effect

M120 must be located in an NC block that also contains radius compensation **G41** or **G42**. M120 is then effective from this block until

- radius compensation is canceled with **G40**
- M120 LA0 is programmed, or
- M120 is programmed without LA, or
- another program is called with **%**
- the working plane is tilted with Cycle **G80** or the PLANE function

M120 becomes effective at the start of the block.

Restrictions

- After an external or internal stop, you can only re-enter the contour with the function RESTORE POS. AT N. Before you start the block scan, you must cancel M120, otherwise the TNC will output an error message.
- When using the path functions **G25** and **G24**, the blocs before and after **G25** or **G24** must only contain coordinates on the working plane
- If you want to approach the contour on a tangential path, you must use the function APPR LCT. The block with APPR LCT must contain only coordinates of the working plane
- If you want to depart the contour on a tangential path, use the function DEP LCT. The block with DEP LCT must contain only coordinates of the working plane
- Before using the functions listed below, you have to cancel M120 and the radius compensation:
  - Cycle **G60** Tolerance
  - Cycle **G80** Working plane
  - PLANE function
  - M114
  - M128

Superimposing handwheel positioning during program run: M118

Standard behavior

In the program run modes, the TNC moves the tool as defined in the part program.

Behavior with M118

M118 permits manual corrections by handwheel during program run. Just program M118 and enter an axis-specific value (linear or rotary axis) in millimeters.

The handwheel superimposing function with **M118** in combination with dynamic collision monitoring is only possible at a standstill.

M118 is not possible in combination with dynamic collision monitoring and also functions **TCPM** or **M128**.

To be able to use M118 without restrictions, you have to deselect DCM either with a soft key in the menu, or activate a kinematics model without collision monitored objects (CMOs).

Danger of collision!

If you modify the position of a rotary axis with the handwheel superimposition **M118** function and then run **M140**, the TNC ignores the superimposed values with the retraction movement.

This may cause undesired motion or collisions on machines with rotary axes in the head.

Input

If you enter M118 in a positioning block, the TNC continues the dialog for this block by asking you the axis-specific values. The coordinates are entered with the orange axis direction buttons or the ASCII keyboard.

Effect

Cancel handwheel positioning by programming M118 once again without coordinate input.

M118 becomes effective at the start of block.

Example NC blocks

You want to be able to use the handwheel during program run to move the tool in the working plane X/Y by ±1 mm and in the rotary axis B by ±5° from the programmed value:

```
N250 G01 G41 X+0 Y+38.5 F125 M118 X1 Y1 B5 *
```

M118 is effective in a tilted coordinate system if you activate the tilted working plane function for the Manual Operation mode. If the tilted working plane function is not active for the Manual Operation mode, the original coordinate system is effective.

M118 also functions in the Positioning with MDI mode of operation!

Virtual tool axis VT

Your machine tool builder must have prepared the TNC for this function. Refer to your machine manual.

With the virtual tool axis you can also traverse in the direction of a sloping tool with the handwheel on a machine with swivel heads. To traverse in a virtual tool axis direction, select the VT axis on the display of your handwheel.

Further Information: Traverse with electronic handwheels, page 494

With an HR 5xx handwheel you can select the virtual axis directly with the orange VI axis key if required (refer to your machine manual).

You can also carry out handwheel superimposing in the currently active tool axis direction with the M118 function. For this purpose, you must at least define the spindle axis with the permitted traverse range (e.g. M118 Z5) in the M118 function and select the VT axis on the handwheel.

Retraction from the contour in the tool-axis direction: M140

Standard behavior

In the **Program run single block** and **Program run full sequence** modes, the TNC moves the tool as defined in the machining program.

Behavior with M140

With M140 MB (move back) you can enter a path in the direction of the tool axis for departure from the contour.

Input

If you enter M140 in a positioning block, the TNC continues the dialog and asks for the desired path of tool departure from the contour. Enter the requested path that the tool should follow when departing the contour, or press the MB MAX soft key to move to the limit of the traverse range.

In addition, you can program the feed rate at which the tool traverses the entered path. If you do not enter a feed rate, the TNC moves the tool along the entered path at rapid traverse.

Effect

M140 is effective only in the NC block in which M140 is programmed.

M140 becomes effective at the start of the block.

Example NC blocks

Block 250: Retract the tool 50 mm from the contour.

Block 251: Move the tool to the limit of the traverse range.

```
N250 G01 X+0 Y+38.5 F125 M140 MB50 *
N251 G01 X+0 Y+38.5 F125 M140 MB MAX *
```

M140 is also effective if the tilted-working-plane function is active. On machines with swivel heads, the TNC then moves the tool in the tilted coordinate system.

With **M140 MB MAX** you can only retract in the positive direction.

Always define a TOOL CALL with a tool axis before entering **M140**, otherwise the direction of traverse is not defined.

Danger of collision!

If you modify the position of a rotary axis with the handwheel superimposition **M118** function and then run **M140**, the TNC ignores the superimposed values with the retraction movement.

This may cause undesired motion or collisions on machines with rotary axes in the head.

Danger of collision!

In conjunction with dynamic collision monitoring **DCM** the TNC might move the tool only until it detects a collision and, from there, complete the NC program without any error message. **This process takes place no matter whether collision monitoring is active or inactive.** This can result in movements different from those programmed!

Suppressing touch probe monitoring: M141

Standard behavior

When the stylus is deflected, the TNC outputs an error message as soon as you attempt to move a machine axis.

Behavior with M141

The TNC moves the machine axes even if the touch probe is deflected. This function is required if you wish to write your own measuring cycle in connection with measuring cycle 3 in order to retract the stylus by means of a positioning block after it has been deflected.

> **!** **Danger of collision!**
> If you use M141, make sure that you retract the touch probe in the correct direction.
> M141 functions only for movements with straight-line blocks.

Effect

M141 is effective only in the block in which it is programmed.

M141 becomes effective at the start of block.

Deleting basic rotation: M143

Standard behavior

The basic rotation remains in effect until it is reset or is overwritten with a new value.

Behavior with M143

The TNC erases a programmed basic rotation from the NC program.

> The function **M143** is not permitted during mid-program startup.

Effect

M143 is effective only from the NC block in which M143 is programmed.

M143 becomes effective at the start of the block.

> M143 deletes the entries in columns SPA, SPB and SPC in the preset table; re-activating the corresponding preset lines does not activate the deleted basic rotation.

Automatically retract tool from the contour at an NC stop: M148

Standard behavior

At an NC stop the TNC stops all traverse movements. The tool stops moving at the point of interruption.

Behavior with M148

The M148 function must be enabled by the machine tool builder. The machine tool builder defines in a machine parameter the path that the TNC is to traverse for a **LIFTOFF** command.

The TNC retracts the tool by up to 2 mm in the direction of the tool axis if, in the **LIFTOFF** column of the tool table, you set the parameter **Y** for the active tool.

Further Information: Enter tool data into the table, page 176

LIFTOFF takes effect in the following situations:

- An NC stop triggered by you
- An NC stop triggered by the software, e.g. if an error occurred in the drive system
- When a power interruption occurs

Danger of collision!

Remember that, especially on curved surfaces, the surface can be damaged during return to the contour. Retract the tool before returning to the contour!

Define the value by which the tool should be raised by in the machine parameter **CfgLiftOff** (no. 201400). You can also set the function to be generally inactive in the machine parameter **CfgLiftOff** (no. 201400).

Effect

M148 remains in effect until deactivated with M149.

M148 becomes effective at the start of the block, M149 at the end of the block.

Rounding corners: M197

Standard behavior

The TNC inserts a transition arc at outside corners with active radius compensation. This my lead to grinding of the edge.

Behavior with M197

With Function M197 the contour at the corner is tangentially extended and a smaller transition arc is then inserted. When you program Function M197 and then press the ENT key, the TNC opens the **DL** input field. In **DL** you define the length with which the TNC extends the contour elements. With M197 the corner radius is reduced, the corner grinds less and the traverse movement is still tangential.

Effect

The Function M197 is effective blockwise and is only effective on outside corners.

Example NC blocks

```
G01 X... Y... RL M197 DL0.876
```

11

Programming: Special Functions

11.1 Overview of special functions

The TNC provides the following powerful special functions for a large number of applications:

Function	Description
Dynamic Collision Monitoring with integrated fixture management (Option #40)	page 381
Adaptive Feed Control AFC (Option #45)	page 392
Active Chatter Control (Option #145)	page 405
Working with text files	page 408
Working with freely definable tables	page 412

Press the **SPEC FCT** and the corresponding soft keys to access further special functions of the TNC. The following tables give you an overview of which functions are available.

Main menu for SPEC FCT special functions

SPEC FCT

- Press the special functions key

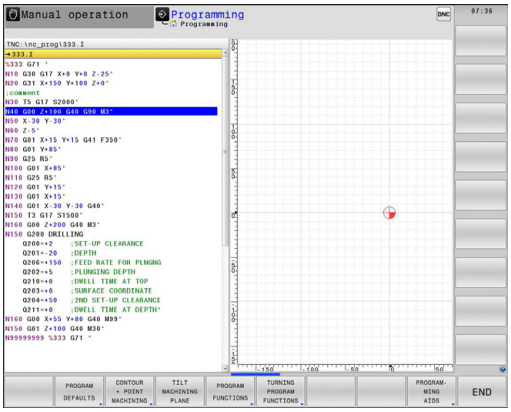

Soft key	Function	Description
PROGRAM DEFAULTS	Define program defaults	page 379
CONTOUR + POINT MACHINING	Functions for contour and point machining	page 379
TILT MACHINING PLANE	Define the **PLANE** function	page 425
PROGRAM FUNCTIONS	Define different DIN/ISO functions	page 380
TURNING PROGRAM FUNCTIONS	Define turning functions	page 463
PROGRAM-MING AIDS	Programming aids	page 145

After pressing the **SPEC FCT** key, you can open the **smartSelect** selection window with the **GOTO** key. The TNC displays a structure overview with all available functions. You can rapidly navigate with the cursor or mouse and select functions in the tree diagram. The TNC displays online help for the specific functions in the window on the right.

Program defaults menu

PROGRAM DEFAULTS

- Select the program defaults menu

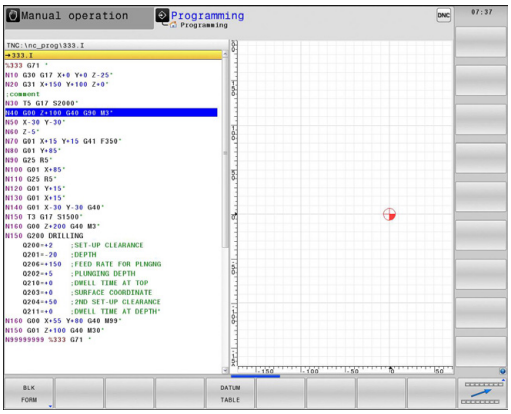

Soft key	Function	Description
BLK FORM	Define workpiece blank	page 106
DATUM TABLE	Select datum table	See Cycle-Programming User's Manual
GLOBAL DEF	Define global cycle parameters	See Cycle-Programming User's Manual

Functions for contour and point machining menu

CONTOUR + POINT MACHINING

- Select the menu for functions for contour and point machining

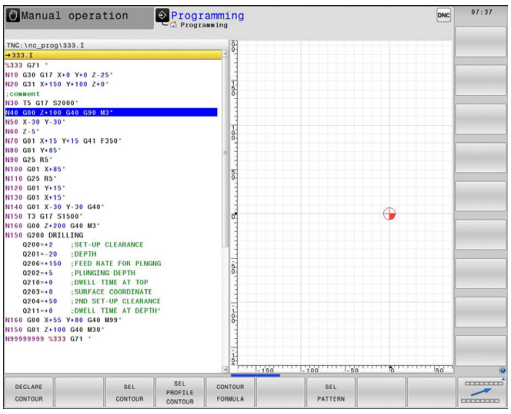

Soft key	Function	Description
DECLARE CONTOUR	Assign contour description	See Cycle-Programming User's Manual
SEL CONTOUR	Select a contour definition	See Cycle-Programming User's Manual
CONTOUR FORMULA	Define a complex contour formula	See Cycle-Programming User's Manual
SEL PATTERN	Select the point file with machining positions	See Cycle-Programming User's Manual

Menu of various DIN/ISO functions

PROGRAM FUNCTIONS

- Select the menu for defining various DIN/ISO functions

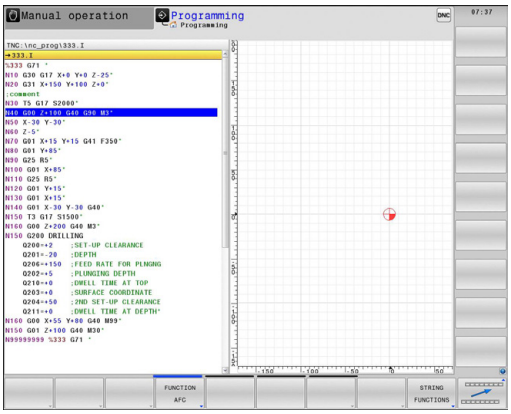

Soft key	Function	Description
FUNCTION AFC	Define Adaptive Feed Control	page 392
STRING FUNCTIONS	Define string functions	page 333
FUNCTION SPINDLE	Define pulsing spindle speed	page 417
FUNCTION FEED	Define dwell time	page 418
FUNCTION DCM	Define Dynamic Collision Monitoring DCM	page 381
DIN/ISO	Define DIN/ISO functions	page 407
INSERT COMMENT	Add comments	page 146

11.2 Dynamic Collision Monitoring (option 40)

Function

Dynamic Collision Monitoring (DCM) must be adapted by the machine manufacturer for the TNC and for the machine. Refer to your machine manual.

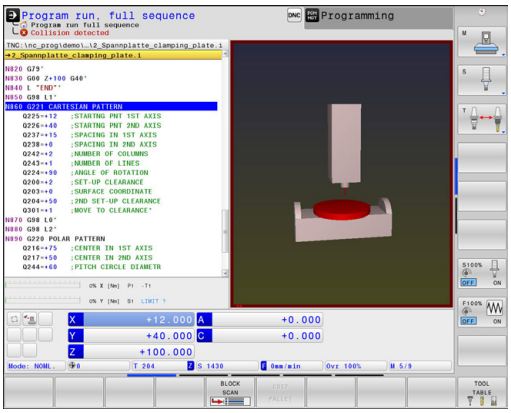

The machine manufacturer can define any objects that are monitored by the TNC during all machining operations. If two objects monitored for collision come within a defined distance of each other, the TNC outputs an error message and terminates the movement.

The TNC can display the defined collision objects graphically in all machine operating modes.

Further Information: Graphic display of the collision objects, page 382

The TNC also monitors the active tool for collision and graphically displays it accordingly. The TNC always assumes cylindrical tools. The TNC likewise monitors stepped tools according to the definition in the tool table.

The control takes into account the following definitions from the tool table:

- Tool lengths
- Tool radii
- Tool dimensions
- Tool carrier kinematics

Generally valid constraints:

- DCM helps to reduce the danger of collision. However, the TNC cannot consider all possible constellations in operation.
- Collisions between machine components and the tool and between the tool and the workpiece are not detected by the TNC.
- DCM can only protect those machine components from collision that your machine tool builder has correctly defined with regard to dimensions, orientation and position.
- The TNC can only monitor tools for which you have defined **positive tool radii** and **positive tool lengths** in the tool table.
- When a touch probe cycle starts, the TNC no longer monitors the stylus length and ball tip diameter so that you can also probe collision objects.
- For certain tools (such as face milling cutters), the radius that would cause a collision can be greater than the value defined in the tool table.
- The tool oversizes **DL** and **DR** from the tool table are taken into account by the TNC. Tool oversizes from the **TOOL CALL** block are not taken into account.

Graphic display of the collision objects

Activate the graphic display of the collision objects as follows:

- Select any machine operating mode

- Press the screen switchover key

POSITION + KINEMATICS

PROGRAM + KINEMATICS

KINEMATICS

- Select the desired screen layout

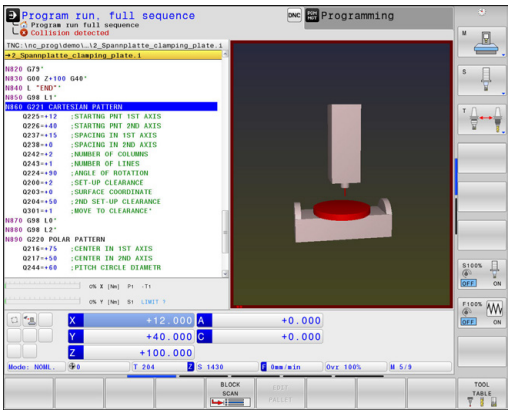

You can also use the soft keys to change the display of the collision objects.

Modify the graphic display of the collision objects as follows:

- Shift the soft-key row if necessary

- Press the **KINEMATICS** soft key
- Modify the graphic display of the collision objects using the following functions

The following functions are available:

Soft key	Function
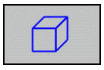	Switch between wire-frame and solid-object view
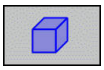	Switch between shadowed and transparent view
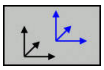	Display/hide the coordinate systems that result from transformations in the kinematics description
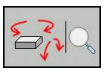	Functions for rotating, zooming and shifting

You can also use the mouse to change the display of the collision objects.

The following functions are available:

- In order to rotate the model shown in three dimensions you hold the right mouse button down and move the mouse. If you simultaneously press the shift key, you can only rotate the model horizontally or vertically.
- To shift the model shown: Hold the center mouse button or the wheel button down and move the mouse. If you simultaneously press the shift key, you can only shift the model horizontally or vertically.
- To zoom in on a certain area: Mark a zoom area by holding the left mouse button down. After you release the left mouse button, the TNC zooms in on the defined area.
- To rapidly magnify or reduce any area: Rotate the mouse wheel backwards or forwards.
- To return to the standard display: Press the shift key and simultaneously double-click with the right mouse key. The rotation angle is maintained if you only double-click with the right mouse key.

Collision monitoring in the manual operating modes

In the **Manual operation** and **Electronic handwheel** operating modes, the TNC stops a motion if two objects monitored for collision approach each other within a distance of less than 2 mm. In this case, the TNC displays an error message naming the two objects causing collision.

Before the collision warning, the TNC dynamically reduces the feed of the movements to ensure that the axes stop in good time before a collision.

If you have selected a screen layout in which the collision objects are on the right, then the TNC additionally marks the colliding objects in red.

Once a collision warning is displayed, machine motions via the direction keys or handwheel are possible only if the motion increases the distance between the collision objects.

Motions that reduce the distance or leave it unchanged are not allowed as long as collision monitoring is active.

To deactivate collision monitoring.

Further Information: Activating and deactivating collision monitoring, page 386

Note the generally valid constraints.

Further Information: Function, page 381

Collision monitoring in the Program Run operating modes

In the **Positioning with manl.data input**, **Program run single block** and **Program run, full sequence** operating modes, the TNC stops the program run before an NC block in which two objects monitored for collision would approach each other within a distance of less than 5 mm is processed. In this case, the TNC displays an error message naming the two objects causing collision.

If you have selected a screen layout in which the collision objects are on the right, then the TNC additionally marks the colliding objects in red.

Constraints with program run:

- For tapping with a floating tap holder only the basic setting of the floating tap holder is taken into account with collision monitoring.
- The handwheel superimpositioning function with **M118** in combination with active collision monitoring is only possible in stopped condition.
- Dynamic collision monitoring is not available with the following functions **M118** and also **TCPM** or **M128**.
- In conjunction with function **M140**, the TNC might move the tool only until it detects a collision and, from there, complete the NC program without any error message. **This process takes place no matter whether collision monitoring is active or inactive.** This can result in movements different from those programmed!
- The TNC is not able to implement collision monitoring if functions or cycles require the coupling of several axes e.g. with eccentric turning.
- The TNC is not able to implement collision monitoring if at least one axis is referenced in lag tracking or not.

Also note the generally valid restrictions.

Further Information: Function, page 381

Activating and deactivating collision monitoring

In some cases it is necessary to temporarily deactivate collision monitoring:

- To reduce the distance between two objects monitored for collision
- To prevent stops during program runs

> **Danger of collision!**
> If you deactivate collision monitoring, the TNC does not output an error message with a pending collision.
>
> Also, with inactive collision monitoring, the TNC does not prevent movements caused by collision.

Permanently manually activating and deactivating collision monitoring

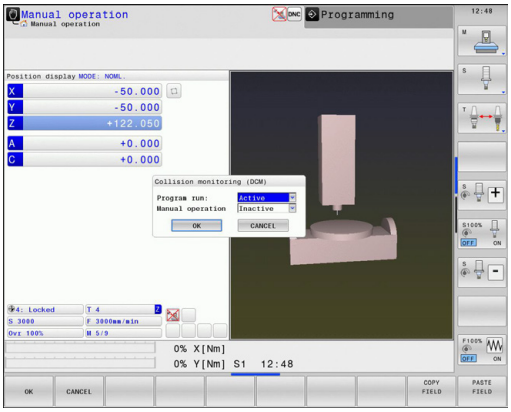

- Select the **Manual operation** or **Electronic handwheel** operating mode
- Toggle the soft-key row if necessary
- Press the **COLLISION** soft key
- Select the operating modes for which the modification should apply:
  - **Program run**: **Positioning with manl.data input**, **Program run, single block** and **Program run, full sequence**
  - **Manual Operation**: **Manual operation** and **Electronic handwheel**
- Press the **GO TO** key
- Select the condition for which the selected operating modes should apply:
  - **Inactive**: Deactivate collision monitoring
  - **Active**: Activate collision monitoring
- Press the **OK** soft key.

Temporarily activating and deactivating collision monitoring via program control

- Open the NC program in **Programming** mode
- Place the cursor at the desired position, e.g. before Cycle 800 to enable eccentric turning

SPEC FCT

- Press the **SPEC FCT** key

PROGRAM FUNCTIONS

- Press the **PROGRAM FUNCTIONS** soft key

▷

- Shift the soft-key row

FUNCTION DCM

- Press the **FUNCTION DCM** soft key.

FUNCTION DCM OFF

FUNCTION DCM ON

- Select the condition with the corresponding soft key:
  - **DCM OFF FUNCTION**: This NC command temporarily deactivates collision monitoring. The deactivation is effective only until the end of the program or until the next **DCM ON FUNCTION**. When another NC program is called, DCM is active again.
  - **DCM ON FUNCTION**: This NC command cancels an existing **DCM OFF FUNCTION**.

> The settings applied with the **DCM FUNCTION** are only effective in the active NC program.
>
> After terminating the program run or selecting a new program, the settings made for **Program Run** and **Manual Operation** with the **COLLISION** soft key become effective again.
>
> **Further Information:** Permanently manually activating and deactivating collision monitoring, page 386

Symbols

Symbols in the status display show the condition of collision monitoring:

Icon	Function
	Collision monitoring active
	Collision monitoring is not available
	Collision monitoring is not active

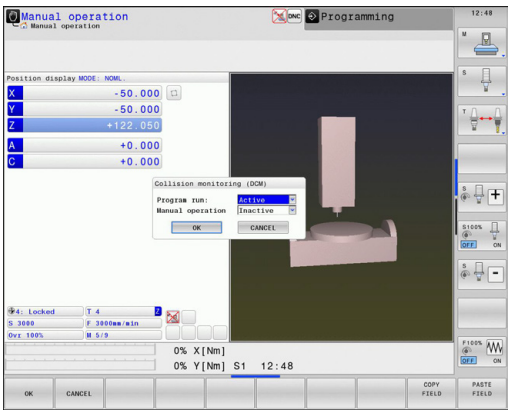

11.3 Tool carrier management

Fundamentals

You can create and manage tool carriers using the tool carrier management. The control factors the tool carriers into the calculations.

On machines with 3 axes, tool carriers for right-angled angled heads help processing on tool axes **X** and **Y**, as the control takes the dimensions of the angle heads into consideration.

Along with software option number 8, **Advanced Function Set** 1, you can tilt the working plane to the angle of the removable angled heads and thus keep working with the **Z** tool axis.

Along with software option number 40, **Dynamic Collision Monitoring**, you can monitor every tool carrier and thus prevent collisions.

You must carry out the following steps so that the control can factors the tool carriers into the calculations:

- Save tool carrier templates
- Assign input parameters to tool carriers
- Allocate parameterized tool carriers

Save tool carrier templates

Many tool carriers only differ from others in terms of their dimensions, but their geometric shape is identical. So that you don't have to design all your tool carriers yourself, HEIDENHAIN supplies a range of ready-made tool carrier templates. Tool carrier templates are 3-D models with fixed geometries but changeable dimensions.

The tool carrier templates must be saved in **TNC:\system \Toolkinematics** and have the extension **.cft**.

If the tool carrier templates are not available in your control, please download the data you require from: **http://www.klartext-portal.de/ncsolutions/**

If you need further tool carrier templates, please contact your machine manufacturer or third-party vendor.

The tool carrier templates may consist of several sub-files. If the sub-files are incomplete, the control will display an error message.

Do not use incomplete tool carrier templates!

Assign input parameters to tool carriers

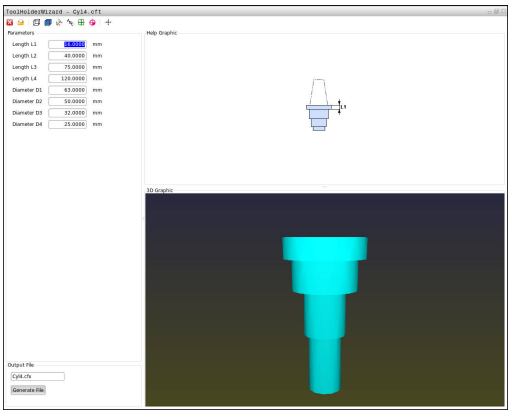

Before the control can factor the tool carrier into the calculations, you must give the tool carrier template the actual dimensions. These parameters are entered in the additional **ToolHolderWizard** tool.

Save the parameterized tool carriers with the extension **.cfx** under **TNC:\system\Toolkinematics**.

The additional **ToolHolderWizard** tool is mainly operated with a mouse. Using the mouse, you can also set the desired screen layout, by drawing a line between the areas **Parameters**, **Help graphics** and **3-D Graphics** by holding down the left mouse button.

The following icons are available in the additional **ToolHolderWizard** tool:

Icon	Function
	Close tool
	Open file
	Switch between wire frame model and solid object view
	Switch between shaded and transparent view
	Display or hide transformation vectors
	Show or hide names of collision objects
	Display or hide test points
	Show or hide measurement points
	Return to starting view of the 3-D model

If the tool carrier template does not contain any transformation vectors, names, test points and measurement points, the additional **ToolHolderWizard** tool does not execute any function when the corresponding icons are activated.

11.3 Tool carrier management

Proceed as follows to parameterize tool carrier templates and save these parameters:

- Select the **MANUAL OPERATION** mode

- Press the **TOOL TABLE** soft key

- Press the **EDIT** soft key

- Move the cursor to the **KINEMATIC** column

- Press the **SELECT** soft key

- Press the **TOOL HOLDER WIZARD** soft key
- > The control opens the additional **ToolHolderWizard** tool in a pop-up window

- Press the **OPEN FILE** icon
- > The control opens a pop-up window
- Select the desired tool carrier template using the preview screen
- Press the **OK** button
- > The control opens the selected tool carrier template
- > The cursor goes to the first parameterizable value
- Adjust values
- Enter the name for the parameterized tool holder in the **Output file** area
- Press the **GENERATE FILE** button
- If required, reply to the message on the control

- Press the **CLOSE** icon
- > The control closes the additional tool

Allocate parameterized tool carriers

To allow the control to factor a parameterized tool carrier into calculations, you must allocate the tool carrier to a tool and **call the tool again**.

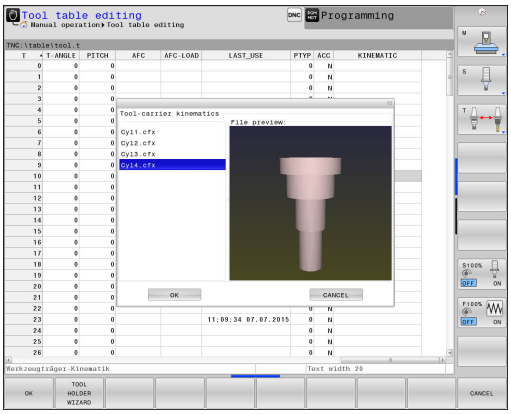

> Parameterized tool carriers can consist of several sub-files. If the sub-files are incomplete, the control will display an error message.
>
> **Only use fully parameterized tool carriers!**

Proceed as follows to allocate a parameterized tool carrier to a tool:

- Select the **MANUAL OPERATION** mode
- Press the **TOOL TABLE** soft key
- Press the **EDIT** soft key
- Move the cursor to the **KINEMATIC** column of the required tool
- Press the **SELECT** soft key
  - > The control opens a pop-up window with parameterized tool carriers
  - Select the desired tool carrier using the preview screen
  - Press the **OK** soft key
  - > The control copies the name of the selected tool carrier to the **KINEMATIC** column
- Exit the tool table

11.4 Adaptive Feed Control AFC (option 45)

Application

This feature must be enabled and adapted by the machine tool builder.

Refer to your machine manual.

Your machine tool builder may also have specified whether the TNC uses the spindle power or any other value as the input value for the feed control.

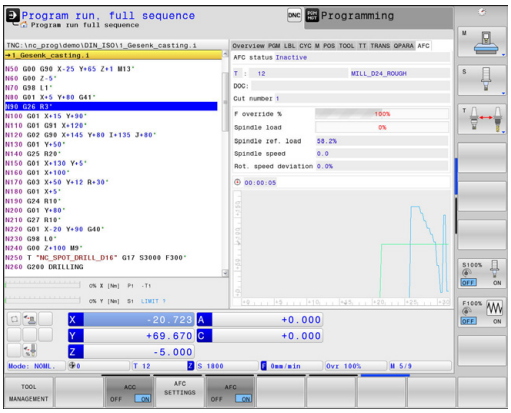

Adaptive feed control is not intended for tools with diameters less than 5 mm. This limit diameter might also be greater if the spindle's rated power is very high.

Do not work with adaptive feed control in operations in which the feed rate and spindle speed must be adapted to each other, such as tapping.

In adaptive feed control the TNC automatically controls the feed rate when running an NC program as a function of the current spindle power consumption. The spindle power required for each machining step is to be recorded in a teach-in cut and saved by the TNC in a file belonging to the machining program. When each machining step is started, which is normally when the spindle is switched on, the TNC controls the feed rate so that it remains within the limits that you have defined.

If the cutting conditions do not change, you can define a spindle power determined using a teach-in cut as a permanent tool-specific standard reference power. Use the **AFC-LOAD** column in the tool table to do this. If you enter a value manually in this column, the control does not execute any more teach-in cuts.

This makes it possible to avoid negative effects on the tool, the workpiece, and the machine that might be caused by changing cutting conditions. Cutting conditions are changed particularly by:

- Tool wear
- Fluctuating cutting depths that occur especially with cast parts
- Fluctuating hardness caused by material flaws

Adaptive feed control (AFC) offers the following benefits:

- Optimization of machining time

  By regulating the feed rate, the TNC attempts to maintain the previously programmed maximum spindle power or the standard reference power indicated in the tool table (**AFC-LOAD** column) for the duration of the entire process. It shortens the machining time by increasing the feed rate in machining zones with little material removal.
- Tool monitoring

  If the spindle power exceeds the programmed or prescribed maximum value (**AFC-LOAD** column in the tool table), the TNC decreases the feed rate until the reference spindle power is reattained. If the maximum spindle power is exceeded during machining and at the same time the feed rate falls below the minimum that you defined, the TNC reacts by shutting down. This helps to prevent further damage after a tool breaks or is worn out.
- Protection of the machine's mechanical elements

  Timely feed rate reduction and shutdown responses help to avoid machine overload

Defining the AFC basic settings

In the **AFC.TAB** table, which must be saved in the **TNC:\table** directory, you enter the control settings with which the TNC performs the feed rate control.

The data in this table are default values that were copied into a file belonging to the respective machining program during a teach-in cut. The values act as the basis for regulation.

> If you define a tool-specific standard reference power using the **AFC-LOAD** column in the tool table, the control generates the associated file for the relevant processing program without a teach-in cut shortly before regulation.

The following data are to be defined in this table:

Column	Function
NR	Consecutive line number in the table (has no further functions)
AFC	Name of the control setting. You enter this name in the **AFC** column of the tool table. It specifies the assignment of control parameters to the tool.
FMIN	Feed rate at which the TNC is to conduct a shutdown response. Enter the value in percent with respect to the programmed feed rate. Input range: 50 to 100 %
FMAX	Maximum feed rate in the material up to which the TNC can automatically increase the feed rate. Enter the value in percent of the programmed feed rate.
FIDL	Feed rate at which the TNC is to traverse when the tool is not cutting (feed rate in the air). Enter the value in percent of the programmed feed rate.
FENT	Feed rate at which the TNC is to traverse when the tool enters or exits the material. Enter the value in percent with respect to the programmed feed rate. Maximum input value: 100%
OVLD	Desired reaction of the TNC to overload: ■ **M**: Execution of a macro defined by the machine tool builder ■ **S**: Immediate NC stop ■ **F**: NC stop if the tool has been retracted ■ **E**: Just display an error message on the screen ■ **-**: No overload reaction The TNC conducts a shutdown response if the maximum spindle power is exceeded for more than one second and at the same time the feed rate falls below the minimum you defined. Enter the desired function via the ASCII keyboard.
POUT	Spindle power at which the TNC is to detect the exit of the tool from the workpiece. Enter the value in percent of the learned reference load. Recommended input value: 8 %

Column	Function
SENS	Sensitivity (aggressiveness) of feedback control. A value between 50 and 200 can be entered. 50 is for slow control, 200 for a very aggressive control. An aggressive control reacts quickly and with strong changes to the values, but it tends to overshoot. Recommended value: 100
PLC	Value that the TNC is to transfer to the PLC at the beginning of a machining step. The machine manufacturer defines the function, so refer to your machine manual.

In the **AFC.TAB** table you can define as many control settings (lines) as desired.

If there is no AFC.TAB table in the **TNC:\table** directory, then the TNC uses a fixed internally specified standard setting for the teach-in cut, or predefined tool-dependent standard reference power for regulation. It is best, however, to work with the AFC.TAB table.

Proceed as follows to create the AFC.TAB file (only necessary if the file does not yet exist):

- Select the **Programming** mode of operation
- To call the file manager, press the **PGM MGT** key
- Select the **TNC:** directory
- Create a new **AFC.TAB** file and confirm with the **ENT** key: The TNC shows a list of table formats
- Select the **AFC.TAB** table format and confirm with the **ENT** key: The TNC creates a table with the **Standard** control settings

Recording a teach-in cut

The TNC provides several cycles that enable you to start and stop a teach-in step:

- **FUNCTION AFC CTRL**: The AFC CTRL function activates closed-loop mode starting with the place at which this block is run (even if the teach-in phase has not yet been completed)
- **FUNCTION AFC CUT BEGIN TIME1 DIST2 LOAD3**: The TNC starts a sequence of cuts with active AFC. The switch from the teach-in cut to closed-loop mode begins as soon as the reference load was determined in the teach-in phase, or once one of the conditions TIME, DIST or LOAD is fulfilled. With TIME you define the maximum duration in seconds of the teach-in phase. DIST defines the maximum distance for the teach-in cut. With LOAD you can set a reference load directly.
- **FUNCTION AFC CUT END**: The AFC CUT END function deactivates the AFC control

The defaults TIME, DIST and LOAD are modally effective. They can be reset with the entry 0.

If you enter a tool-dependent standard reference power using the **AFC-LOAD** column, the control stops executing teach-in cuts. The control immediately uses the value given for regulation. You specify the value for the tool-dependent standard reference once in advance with a teach-in cut. If the cut conditions change, e.g. of the workpiece material changes, carry out a new teach-in cut.

Programming AFC

To program the AFC functions for starting and ending the teach in cut, proceed as follows:

- In the **Programming** mode, press the SPEC FCT key
- Select the **PROGRAM FUNCTIONS** soft key
- Select the **FUNCTION AFC** soft key
- Select the function

With a teach-in cut the TNC firstly copies the basic settings defined in the AFC.TAB table into the file **<name>.I.AFC.DEP** for each machining step. **<name>** is the name of the NC program for which you have recorded the teach-in cut. In addition, the TNC measures the maximum spindle power consumed during the teach-in cut and saves this value in the table.
Each line in the **<name>.I.AFC.DEP** file stands for a machining section, that you start with **FUNCTION AFC CUT BEGIN** and complete with **FUNCTION AFC CUT END**. You can edit all data of the **<name>.I.AFC.DEP** file if you wish to optimize them. If have carried out optimization processes in comparison with the values entered in the AFC.TAB table, the TNC places a ***** in front of the control settings in the AFC column.
Further Information: Defining the AFC basic settings, page 394
As well as the data from the AFC.TAB table, the TNC also saves the following additional information in the file **<name>.I.AFC.DEP**:

Column	Function
NR	Number of the machining step
TOOL	Number or name of the tool with which the machining step was made (not editable)
IDX	Index of the tool with which the machining step was made (not editable)
N	Difference for tool call: ■ **0**: Tool was called by its tool number ■ **1**: Tool was called by its tool name
PREF	Reference load of the spindle. The TNC measures the value in percent with respect to the rated power of the spindle
ST	Status of the machining step: ■ **L**: In the next program run, a teach-in cut is recorded for this machining step. The TNC overwrites any existing values in this line ■ **C**: The teach-in cut was successfully completed. The next program run can be conducted with automatic feed control
AFC	Name of the control setting

Remember the following before you record a teach-in cut:

- If required, adapt the control settings in the AFC.TAB table
- Enter the desired control setting for all tools in the **AFC** column of the tool table TOOL.T
- Select the program for teach-in
- Activate the AFC with the soft key
  Further Information: Activating/deactivating AFC, page 401

You can teach any number of machining steps for a tool. Your machine tool builder will either make a function available for this, or will integrate this possibility in the functions for switching on the spindle. Refer to your machine manual.

The functions for starting and ending a machining step are machine-dependent. Refer to your machine manual.

When you are performing a teach-in cut, the TNC shows the spindle reference power determined until this time in a pop-up window.

You can reset the reference power at any time by pressing the **PREF RESET** soft key. The TNC then restarts the learning phase.

When you record a teach-in cut, the TNC internally sets the spindle override to 100 %. Then you can no longer change the spindle speed.

During the teach-in cut, you can influence the measured reference load by using the feed rate override to make any changes to the contouring feed rate.

You do not have to run the entire machining step in the learning mode. If the cutting conditions do not change significantly, you can switch to the control mode immediately. Press the **EXIT LEARNING** soft key, and the status changes from **L** to **C**.

You can repeat a teach-in cut as often as desired. Manually change the status from **ST** back to **L**. It may be necessary to repeat the teach-in cut if the programmed feed rate is far too fast, and forces you to sharply decrease the feed rate override during the machining step.

The TNC changes the status from teach-in **(L)** to controlling **(C)** only when the recorded reference load is greater than 2%. Adaptive feed control is not possible for smaller values.

Proceed as follows to select and, if required, edit the **<name>.I.AFC.DEP** file:

- Select the **Program Run, Full Sequence** operating mode
- Shift the soft-key row
- Select the table of AFC settings
- Make optimizations if required

> Note that the **<name>.I.AFC.DEP** file is locked against editing as long as the NC program **<name>.I** is running.
>
> The TNC removes the editing lock if one of the following functions has been executed:
>
> - **M02**
> - **M30**
> - **N99999999**

You can also change the **<name>.I.AFC.DEP** file in **Programming** mode. If necessary, you can even delete a machining step (entire row) there.

> In order to edit the **<name>.I.AFC.DEP** file, you must first set the file manager so that all file types can be displayed (**SELECT TYPE** soft key).
>
> **Further Information:** Files, page 116

Activating/deactivating AFC

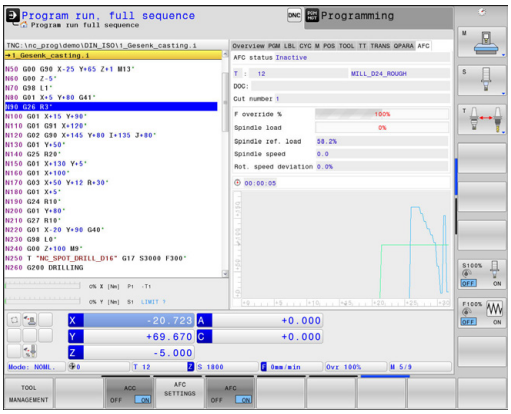

- Select the **Program Run, Full Sequence** operating mode
- Shift the soft-key row
- To activate the adaptive feed control: Set the soft key to **ON** and the TNC displays the AFC symbol in the position display
  Further Information: Status displays, page 80
- To deactivate the adaptive feed control: Set the soft key to **OFF**

The adaptive feed control remains active until you deactivate it by soft key. The TNC remembers the setting of the soft key even if the power is interrupted.

If the adaptive feed control is active in the **control** mode, the TNC internally sets the spindle override to 100 %. Then you can no longer change the spindle speed.

If the adaptive feed control is active in the **control** mode, the TNC takes over the feed rate override function:

- If you increase the feed rate override, it has no influence on the control.
- If you decrease the feed rate override by more than **10%** with respect to the maximum setting, the TNC switches the adaptive feed control off. In this case the TNC displays a window to inform you.

In NC blocks containing **G00**, the adaptive feed control is **not active**.

Mid-program startup is allowed during active feed control and the TNC takes the cut number of the startup point into account.

The TNC shows various pieces of information in the additional status display when adaptive feed control is active.

Further Information: Additional status displays, page 82

In addition, the TNC shows the symbol in the position display.

Log file

The TNC stores various pieces of information for each machining step of a teach-in cut in the **<name>.I.AFC2.DEP** file. **<name>** is the name of the NC program for which you have recorded the teach-in cut. During control, the TNC updates the data and makes various evaluations. The following data are to be saved in this table:

Column	Function
NR	Number of the machining step
TOOL	Number or name of the tool with which the machining step was made
IDX	Index of the tool with which the machining step was made
SNOM	Nominal spindle speed [rpm]
SDIFF	Maximum difference of the spindle speed in % of the nominal speed
CTIME	Machining time (tool engaged)
FAVG	Average feed rate (tool engaged)
FMIN	Smallest occurring feed factor. The TNC shows the value as a percentage of the programmed feed rate
PMAX	Maximum recorded spindle power during machining. The TNC shows the value as a percent of the spindle's rated power.
PREF	Reference load of the spindle. The TNC shows the value as a percent of the spindle's rated power.
OVLD	Reaction by the TNC to overload: ■ **M**: A macro defined by the machine tool builder has been run ■ **S**: Immediate NC stop was conducted ■ **F**: NC stop was conducted after the tool was retracted ■ **E**: An error message was displayed ■ **-**: There was no overload reaction
BLOCK	Block number at which the machining step begins

During regulation, the control indicates the current machining time as well as the resulting time saving in percent. The control enters the results of the evaluation between the key words **total** and **saved** in the last line of the log file. Where the time balance is positive, the percentage value is also positive.

Proceed as follows to select the **<name>.I.AFC2.DEP** file:

- Select the **Program Run, Full Sequence** operating mode
- Shift the soft-key row
- Select the table of AFC settings
- Show the log file

Tool breakage/tool wear monitoring

This feature must be enabled and adapted by the machine tool builder.

Refer to your machine manual.

With the breakage/wear monitor, a cut-based tool breakage detection during active AFC can be realized.

Through the functions that can be defined by the machine tool builder you can define a percentage value for wear or breakage detection with respect to the rated power.

When the defined limit spindle power range is not maintained, the TNC conducts an NC stop.

Spindle load monitoring

This feature must be enabled and adapted by the machine tool builder. Refer to your machine manual.

With the spindle load monitoring function you can easily have the spindle load monitored in order, for example, to detect overloading the spindle power.

The function is independent of AFC, i.e. it is not cut-based and does not depend on teach-in steps. Through the functions that can be defined by the machine tool builder, you only need to define the percentage value for spindle limit power with respect to the rated power.

When the defined limit spindle power range is not maintained, the TNC conducts an NC stop.

11.5 Active Chatter Control ACC (option 145)

Application

This feature must be enabled and adapted by the machine tool builder.

Refer to your machine manual.

Strong milling forces come into play during roughing (power milling). Depending on the tool spindle speed, the resonances in the machine tool and the chip volume (metal-removal rate during milling), the tool can sometimes begin to "chatter." This chattering places heavy strain on the machine, and causes ugly marks on the workpiece surface. The tool, too, is subject to heavy and irregular wear from chattering. In extreme cases it can result in tool breakage.

To reduce the inclination to chattering, HEIDENHAIN now offers an effective antidote with **ACC** (**A**ctive **C**hatter **C**ontrol). The use of this control function is particularly advantageous during heavy cutting. ACC makes substantially higher metal removal rates possible. This makes it possible to increase your metal removal rate by up to 25 % and more, depending on the type of machine. You reduce the mechanical load on the machine and increase the life of your tools at the same time.

Please note that ACC was developed especially for heavy cutting and is particularly effective in this area. You need to conduct appropriate tests to ensure whether ACC is also advantageous during standard roughing.

When you use the ACC feature, you must enter the number of tool cuts **CUT** for the corresponding tool in the TOOL.T tool table.

Activating/deactivating ACC

To activate ACC, you first need to set the **ACC** column to **Y** (**ENT** key = Y, **NO ENT** = N) for the respective tool in the tool table TOOL.T.

Activate/deactivate ACC for the machine mode:

- Select the **Program run, full sequence**, **Program run, single block** or the **Positioning with manl.data input** operating mode
- Shift the soft-key row
- Activate ACC: Set the soft key to **ON** and the TNC displays the ACC symbol in the position display **Further Information:** Status displays, page 80
- To deactivate ACC: Set the soft key to **OFF**

If ACC is on, in the position display the TNC shows the symbol ACC.

11.6 Defining DIN/ISO functions

Overview

> If a USB keyboard is connected, you can also enter the DIN/ISO functions by using the USB keyboard.

The TNC provides soft keys with the following functions for creating DIN/ISO programs:

Soft key	Function
DIN/ISO	Select ISO functions
F	Feed rate
G	Tool movements, cycles and program functions
I	X coordinate of the circle center/pole
J	Y coordinate of the circle center/pole
L	Label call for subprogram and program section repeat
M	Miscellaneous function
N	Block number
T	Tool call
H	Polar coordinate angle
K	Z coordinate of the circle center/pole
R	Polar coordinate radius
S	Spindle speed

11.7 Creating text files

Application

You can use the TNC's text editor to write and edit texts. Typical applications:

- Recording test results
- Documenting working procedures
- Creating formula collections

Text files are type .A files (ASCII files). If you want to edit other types of files, you must first convert them into type .A files.

Opening and exiting a text file

- Select the **Programming** mode
- To call the file manager, press the **PGM MGT** key.
- Display type .A files: Press the **SELECT TYPE** soft key and **SHOW ALL** soft key one after the other
- Select a file and open it with the **SELECT** soft key or **ENT** key, or create a new file by entering the new file name and confirming your entry with the **ENT** key

To leave the text editor, call the file manager and select a file of a different file type, for example a part program.

Soft key	Cursor movements
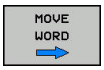	Move cursor one word to the right
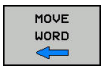	Move cursor one word to the left
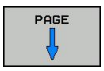	Go to next screen page
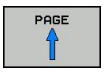	Go to previous screen page
	Cursor at beginning of file
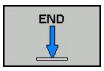	Cursor at end of file

Editing texts

Above the first line of the text editor, there is an information field showing the file name, location and line information:

File: Name of the text file

Line: Line in which the cursor is presently located

Column: Column in which the cursor is presently located

The text is inserted or overwritten at the location of the cursor. You can move the cursor to any desired position in the text file by pressing the arrow keys.

You can insert a line break with the **RETURN** or **ENT** key.

Deleting and re-inserting characters, words and lines

With the text editor, you can erase words and even lines, and insert them at any desired location in the text.

- Move the cursor to the word or line that you wish to erase and insert at a different place in the text
- Press the **DELETE WORD** or **DELETE LINE** soft key. The text is placed in the buffer memory
- Move the cursor to the location where you wish to insert the text, and press the **RESTORE LINE/WORD** soft key

Soft key	Function
DELETE LINE	Delete and temporarily store a line
DELETE WORD	Delete and temporarily store a word
DELETE CHAR	Delete and temporarily store a character
INSERT LINE / WORD	Insert a line or word from temporary storage

Editing text blocks

You can copy and erase text blocks of any size, and insert them at other locations. Before any of these actions, you must first select the desired text block:

- To select a text block: Move the cursor to the first character of the text you wish to select.

SELECT BLOCK

- Press the **SELECT BLOCK** soft key
- Move the cursor to the last character of the text you wish to select. You can select whole lines by moving the cursor up or down directly with the arrow keys—the selected text is shown in a different color

After selecting the desired text block, you can edit the text with the following soft keys:

Soft key	Function
CUT OUT BLOCK	Delete the selected block and store temporarily
INSERT BLOCK	Store the selected block temporarily without erasing (copy)

If desired, you can now insert the temporarily stored block at a different location:

- Move the cursor to the location where you want to insert the temporarily stored text block

INSERT BLOCK

- Press the **INSERT BLOCK** soft key: The text block is inserted.

You can insert the temporarily stored text block as often as desired

Transferring the selected block to a different file

- Select the text block as described previously

APPEND TO FILE

- Press the **APPEND TO FILE** soft key. The TNC displays the dialog prompt **Destination file =**
- Enter the path and name of the destination file. The TNC appends the selected text to the specified file. If no target file with the specified name is found, the TNC creates a new file with the selected text.

Inserting another file at the cursor position

- Move the cursor to the location in the text where you wish to insert another file

READ FILE

- Press the **READ FILE** soft key. The TNC displays the dialog prompt **File name =**
- Enter the path and name of the file you want to insert

Finding text sections

With the text editor, you can search for words or character strings in a text. Two functions are available:

Finding the current text

The search function is used for finding the next occurrence of the word in which the cursor is presently located:

- Move the cursor to the desired word.
- Select the search function: Press the **FIND** soft key
- Press the **FIND CURRENT WORD** soft key
- To find a word: press the **SEARCH** soft key
- Exit the search function: Press the **END** soft key

Finding any text

- Select the search function: Press the **FIND** soft key. The TNC displays the dialog prompt **Find text:**
- Enter the text that you wish to find
- To find the text, press the **FIND** soft key.
- Exit the search function: Press the **END** soft key

11.8 Freely definable tables

Fundamentals

In freely definable tables you can save and read any information from the NC program. The Q parameter functions **D26** to **D28** are provided for this purpose.

You can change the format of freely definable tables, i.e. the columns and their properties, by using the structure editor. They enable you to make tables that are exactly tailored to your application.

You can also toggle between a table view (standard setting) and form view.

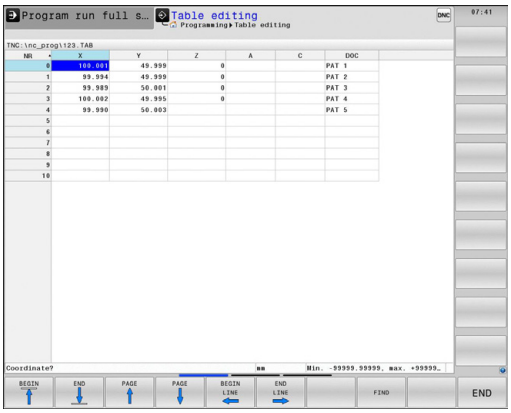

Creating a freely definable table

- To call the file manager, press the **PGM MGT** key
- Enter any file name with the .TAB extension and confirm with the **ENT** key. The TNC displays a pop-up window with permanently saved table formats
- Use the arrow key to select a table template e.g. **EXAMPLE.TAB** and confirm with the **ENT** key: The TNC opens a new table in the predefined format
- To adapt the table to your requirements you have to edit the table format
  Further Information: Editing the table format, page 413

Machine tool builders may define their own table templates and save them in the TNC. When you create a new table, the TNC opens a pop-up window listing all available table templates.

You can also save your own table templates in the TNC. To do this, you create a new table, change the table format and save the table in the **TNC:\system \proto** directory. Then your template will also be available in the list box for table templates when you create a new table.

Editing the table format

- Press the **EDIT FORMAT** soft key (toggle the soft-key row): The TNC opens the editor form, in which the table structure is shown. The meanings of the structure commands (header entries) are shown in the following table.

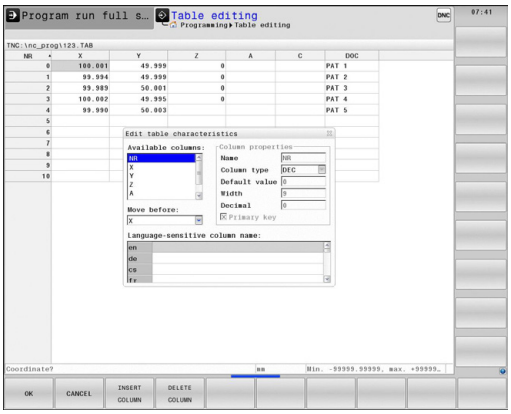

Structure command	Meaning
Available columns:	List of all columns contained in the table
Move before:	The entry highlighted in **Available columns** is moved in front of this column
Name	Column name: Is displayed in the header
Column type	**TEXT**: Text entry **SIGN**: + or - sign **BIN**: Binary number **DEC**: Decimal, positive, whole number (cardinal number) **HEX**: Hexadecimal number **INT**: Whole number **LENGTH**: Length (is converted in inch programs) **FEED**: Feed rate (mm/min or 0.1 inch/min) **IFEED**: Feed rate (mm/min or inch/min) **FLOAT**: Floating-point number **BOOL**: Logical value **INDEX**: Index **TSTAMP**: Fixed format for date and time **UPTEXT**: Text entry in upper case **PATHNAME**: Path name
Default value	Default value for the fields in this column
Width	Width of the column (number of characters)
Primary key	First table column
Language-sensitive column name	Language-sensitive dialogs

You can use a connected mouse or the TNC keyboard to navigate in the form. Navigation using the TNC keyboard:

- Press the navigation keys to go to the entry fields. Use the arrow keys to navigate within an entry field. To open pop-down menus, press the **GOTO** key.

> In a table that already has lines, you cannot change the table properties **Name** and **Column type**. Once you have deleted all lines, you can change these properties. If required, create a backup copy of the table beforehand.
>
> In a field of the **TSTAMP** column type you can reset an invalid value if you press the **CE** key and then the **ENT** key.

Exiting the structure editor

- Press the **OK** soft key. The TNC closes the editor form and applies the changes. All changes are discarded by pressing the **CANCEL** soft key.

Switching between table and form view

All tables with the **.TAB** extension can be opened in either list view or form view.

- Press the key for setting the screen layout. Select the respective soft key for list view or form view (form view: with or without dialog texts)

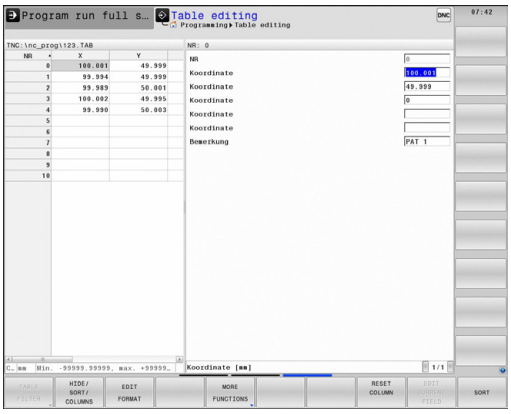

In the form view the TNC lists the line numbers with the contents of the first column in the left half of the screen.

In the right half you can change the data.

- Press the **ENT** key or the arrow key to move to the next entry field
- To select another row, press the green navigation key (folder symbol). This moves the cursor to the left window, and you can select the desired line with the arrow keys. Press the navigation key to switch back to the input window.

D26 – Open a freely definable table

With the function **D26: TABOPEN** you open a freely definable table to be written to with **D27** or to be read from with **D28**.

> Only one table can be open in an NC program. A new block with **D26** automatically closes the last opened table.
>
> The table to be opened must have the extension **.TAB**.

Example: Open the table TAB1.TAB, which is saved in the directory TNC:\DIR1.

```
N56 D26 TNC:\DIR1\TAB1.TAB
```

D27 – Write to a freely definable table

With the **D27** function you write to the table that you previously opened with **D26**.

You can write several column names in a **D27** block. The column names must be written between quotation marks and separated by a comma. You define the values that the TNC is to write to the respective column with Q parameters.

> Note that by default the **D27** function also writes values to the currently open table in **Test run** mode. The **D18 ID992 NR16** function enables you to query in which operating mode the program is to be run. If the **D27** function is to be run only in the **Program Run, Single Block** and **Program Run, Full Sequence** operating modes, you can skip the respective program section by using a jump command.
>
> **Further Information:** If-then decisions with Q parameters, page 307
>
> You can write only to numerical table fields.
>
> If you wish to write to more than one column in a block, you must save the values under successive Q parameter numbers.

Example

You wish to write to the columns "Radius," "Depth" and "D" in line 5 of the presently opened table. The value to be written in the table must be saved in the Q parameters Q5, Q6 and Q7.

```
N53 Q5 = 3.75
N54 Q6 = -5
N55 Q7 = 7.5
N56 D27 P01 5/5/"RADIUS,DEPTH,D" = Q5
```

D28 – Read from a freely definable table

With the **D28** function you read from the table previously opened with **D26**.

You can define, i.e. read, several column names in a **D28** block. The column names must be written between quotation marks and separated by a comma. In the **D28** block you can define the Q parameter number in which the TNC is to write the value that is first read.

> You can read only numerical table fields.
>
> If you wish to read from more than one column in a block, the TNC will save the values under successive Q parameter numbers.

Example

You wish to read the values of the columns "Radius," "Depth" and "D" from line 6 of the presently opened table. Save the first value in Q parameter Q10 (second value in Q11, third value in Q12).

```
N56 D28 Q10 = 6/"RADIUS,DEPTH,D"
```

Customize table view

> This function may only be used with the permission of your machine manufacturer.

Soft key	Function
ADAPT THE TABLE FORMAT	Adapt format of tables present after changing the control software version

11.9 Pulsing spindle speed FUNCTION S-PULSE

Program pulsing spindle speed

Application

The behavior of this function varies depending on the respective machine.
Refer to your machine manual.

Using the **S-PULSE FUNCTION** you can program a pulsing spindle speed, e.g. to avoid natural oscillations of the machine when operating at a constant spindle speed.

You can define the duration of a vibration (period length) using the P-TIME input value or a speed change in percent using the the SCALE input value. The spindle speed changes in a sinusoidal form around the target value.

Procedure

Proceed as follows for the definition:

NC block

```
N30 FUNCTION S-PULSE P-TIME10
    SCALE5*
```

SPEC FCT
- Show the soft-key row with special functions

PROGRAM FUNCTIONS
- Select the menu for defining various conversational functions

FUNCTION SPINDLE
- Select the **FEED FUNCTION** soft key

SPINDLE-PULSE
- Press the **SPINDLE PULSE** soft key
- Define period length P-TIME
- Define speed change SCALE

The control never exceeds a programmed speed limit. The spindle speed is maintained until the sinusoidal curve of the **S-PULSE FUNCTION** falls below the maximum speed once more.

Reset pulsing spindle speed

Use the **S-PULSE RESET** function to reset the pulsing spindle speed.

Proceed as follows for the definition:

NC block

```
N40 FUNCTION S-PULSE RESET*
```

SPEC FCT
- Show the soft-key row with special functions

PROGRAM FUNCTIONS
- Select the menu for defining various plain-language functions

FUNCTION SPINDLE
- Select the **FEED FUNCTION** soft key

RESET SPINDLE-PULSE
- Select the **RESET SPINDLE-PULSE** soft key

11.10 Dwell time FUNCTION FEED DWELL

Programming dwell time

Application

The behavior of this function varies depending on the respective machine.
Refer to your machine manual.

The **FUNCTION FEED DWELL** function is used to program a recurring dwell time in seconds, e.g. to force chip breaking in a turning cycle. Program **FUNCTION FEED DWELL** immediately prior to the machining you wish to run with chip breaking.

The defined dwell time from **FUNCTION FEED DWELL** is not effective with rapid traverse and probing motion.

Damage to the workplace!
Do not use **FUNCTION FEED DWELL** for machining threads.

Procedure

Proceed as follows for the definition:

SPEC FCT
- Show the soft-key row with special functions

PROGRAM FUNCTIONS
- Select the menu for defining various plain-language functions

FUNCTION FEED
- Select the **FUNCTION FEED** soft key

FEED DWELL
- Select the **FEED DWELL** soft key
- Define the interval duration for dwelling D-TIME
- Define the interval duration for cutting F-TIME

NC block

```
N30 FUNCTION FEED DWELL D-
    TIME0.5 F-TIME5*
```

Resetting dwell time

Reset to the dwell time immediately following the machining with chip breaking.

Use **FUNCTION FEED DWELL RESET** to reset the recurring dwell time.

Proceed as follows for the definition:

SPEC FCT

- Show the soft-key row with special functions

PROGRAM FUNCTIONS

- Select the menu for defining various plain-language functions

FUNCTION FEED

- Select the **FUNCTION FEED** soft key

RESET FEED DWELL

- Select the **RESET FEED DWELL** soft key

You can also reset the dwell time by entering D-TIME 0.

The TNC automatically resets the **FUNCTION FEED DWELL** function at the end of a program.

NC block

```
N40 FUNCTION FEED DWELL RESET*
```

12

Programming: Multi-Axis-Machining

12.1 Functions for multiple-axis machining

The TNC functions for multiple-axis machining are described in this chapter.

TNC function	Description	Page
PLANE	Define machining in the tilted working plane	423
M116	Feed rate of rotary axes	446
PLANE/M128	Inclined-tool machining	445
M126	Shortest-path traverse of rotary axes	447
M94	Reduce display value of rotary axes	448
M128	Define the behavior of the TNC when positioning the rotary axes	449
M138	Selection of tilted axes	452
M144	Calculate machine kinematics	453

12.2 The PLANE function: Tilting the working plane (software option 8)

Introduction

The machine manufacturer must enable the functions for tilting the working plane!

You can only use the **PLANE** function in its entirety on machines which have at least two rotary axes (head and/or table). Exception: **PLANE AXIAL** can also be used if only a single rotary axis is present or active on your machine.

The **PLANE** function is a powerful function for defining tilted working planes in various manners.

The parameter definition of the **PLANE** function is separated into two parts:

- The geometric definition of the plane, which is different for each of the available **PLANE** functions.
- The positioning behavior of the **PLANE** function, which is independent of the plane definition and is identical for all **PLANE** functions
  Further Information: Specifying the positioning behavior of the PLANE function, page 439

Danger of collision!

If you work with Cycle **28 MIRROR IMAGE** in a tilted system, please note the following:

If you program mirroring before the tilting of the working plane, the mirroring also effects the tilting. Exception: Tilting with Cycle 19 and **AXIAL PLANE**.

Mirroring a rotary axis with Cycle **28** only mirrors the motions of the axis, but not the angles defined in the PLANE functions. As a result, the positioning of the axes changes.

The actual-position-capture function is not possible with an active tilted working plane.

If you use the **PLANE** function when **M120** is active, the TNC automatically rescinds the radius compensation, which also rescinds the **M120** function.

Always use **PLANE RESET** to reset **PLANE** functions. Entering 0 in all **PLANE** parameters does not completely reset the function.

If you restrict the number of tilting axes with the **M138** function, your machine may provide only limited tilting possibilities. When calculating the axis angle in the selected axis, the control sets the value 0.

The TNC only supports tilting the working plane with spindle axis Z.

Overview

All **PLANE** functions available on the TNC describe the desired working plane independently of the rotary axes actually present on your machine. The following possibilities are available:

Soft key	Function	Required parameters	Page
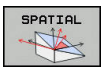	**SPATIAL**	Three spatial angles: **SPA**, **SPB**, and **SPC**	427
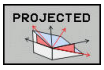	**PROJECTED**	Two projection angles: **PROPR** and **PROMIN** and a rotation angle **ROT**	429
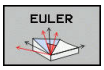	**EULER**	Three Euler angles: precession (**EULPR**), nutation (**EULNU**) and rotation (**EULROT**),	430
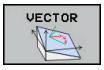	**VECTOR**	Normal vector for defining the plane and base vector for defining the direction of the tilted X axis	432
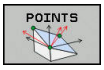	**POINTS**	Coordinates of any three points in the plane to be tilted	434
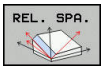	**RELATIVE**	Single, incrementally effective spatial angle	436
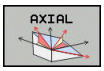	**AXIAL**	Up to three absolute or incremental axis angles **A,B,C**	437
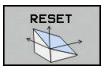	**RESET**	Resetting the PLANE function	426

Running an animation

In order to make the differences between each definition possibility more clear even before selecting the function, you can start an animated sequence via soft key. The control turns the soft key blue and shows an animated portrayal of the selected PLANE function.

Soft key	Function
	Switch on animation
	Animation mode activated

Defining the PLANE function

SPEC FCT

- Show the soft-key row with special functions

TILT MACHINING PLANE

- Select the **PLANE** function: Press the **TILT MACHINING PLANE** soft key: The TNC displays the available definition possibilities in the soft-key row

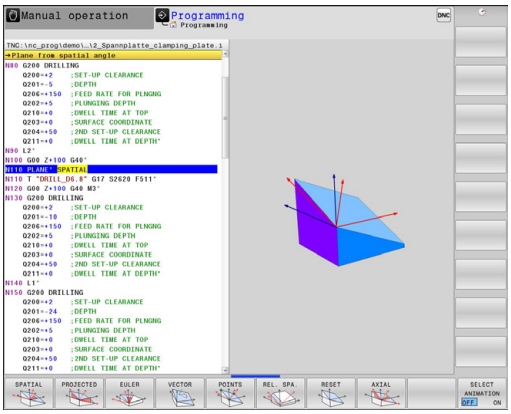

Selecting functions

- Select the desired function by soft key. The control continues the dialog and requests the required parameters

Selecting the function while animation is active

- Select the function using the soft key: Control shows the animation
- To confirm the currently active function: Press the function's soft key again or press the **ENT** key

Position display

As soon as a **PLANE** function is active, the TNC shows the calculated spatial angle in the additional status display. As a rule, the TNC internally always calculates with spatial angles, independent of which **PLANE** function is active.

In Distance-To-Go mode (**ACTDST** and **REFDST**) when tilting (**MOVE** or **TURN** mode), the TNC shows the path in the rotary axis to the defined (or calculated) end position of the rotary axis.

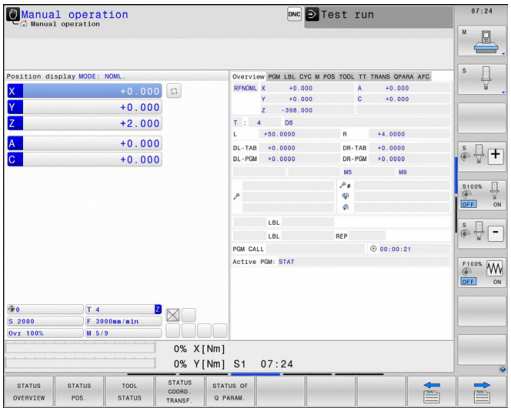

Resetting PLANE function

SPEC FCT

- Show the soft-key row with special functions

TILT MACHINING PLANE

- Select the PLANE function: Press the **TILT MACHINING PLANE** soft key: The TNC displays the available definition possibilities in the soft-key row

RESET

- Select function to be reset: This resets the **PLANE** function internally

MOVE

- Specify whether the TNC automatically moves the rotary axes to the default setting (**MOVE** or **TURN**) or not (**STAY**)
  Further Information: Automatic positioning: MOVE/TURN/STAY (entry is mandatory), page 439

END

- Terminate the entry: Press the **END** key

NC block

```
N10 PLANE RESET MOVE DIST50
    F1000*
```

The **PLANE RESET** function resets the current **PLANE** function—or an active cycle **G80**—completely (angles = 0 and function is inactive). It does not need to be defined more than once.

Deactivate tilting in the **Manual operation** operating mode in the **3D ROT** menu.

Further Information: Activating manual tilting:, page 550

Defining the working plane with the spatial angle: PLANE SPATIAL

Application

Spatial angles define a working plane using up to three rotations of the coordinate system; two perspectives that have always the same result are available for this purpose.

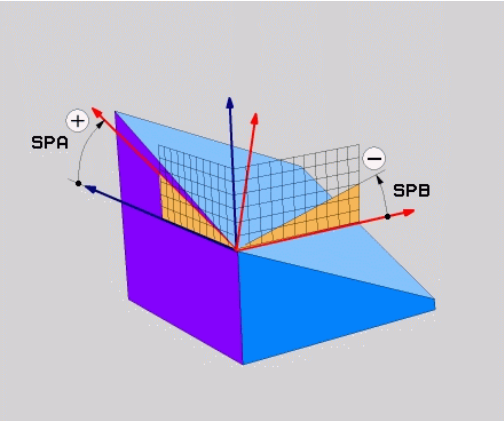

- **Rotations about the machine-based coordinate system:** The sequence of the rotations is first around the machine axis C, then around the machine axis B, and then around the machine axis A.
- **Rotations about the respectively tilted coordinate system:** The sequence of rotations is first around the machine axis C, then around the rotated axis B, and then around the rotated axis A. This perspective is usually easier to understand, because one rotary axis is fixed so that the rotations of the coordinate system are easier to comprehend.

Before programming, note the following

You must always define the three spatial angles **SPA**, **SPB**, and **SPC**, even if one of them = 0.

This operation corresponds to **G80** if the entries in Cycle **G80** are defined as spatial angles on the machine side.

Parameter description for the positioning behavior.

Further Information: Specifying the positioning behavior of the PLANE function, page 439

Input parameters

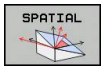

- **Spatial angle A?**: Rotation angle **SPA** around the machine-referenced axis X. Entry range from -359.9999° to +359.9999°
- **Spatial angle B?**: Rotation angle **SPB** around the machine-referenced axis X. Entry range from -359.9999° to +359.9999°
- **Spatial angle C?**: Rotation angle **SPC** around the machine-referenced axis X. Entry range from -359.9999° to +359.9999°
- Continue with the positioning properties **Further Information:** Specifying the positioning behavior of the PLANE function, page 439

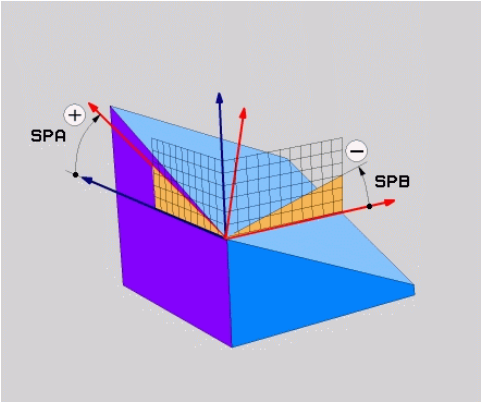

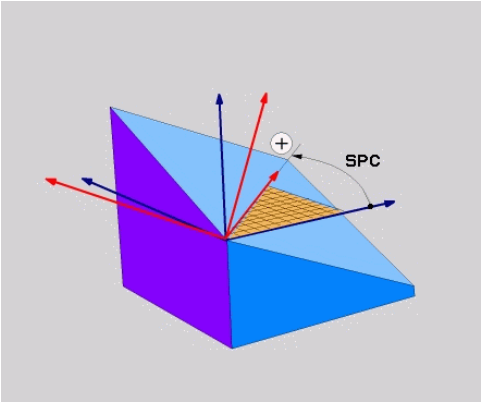

Abbreviations used

Abbreviation	Meaning
SPATIAL	In space
SPA	**Sp**atial **A**: Rotation around the X axis
SPB	**Sp**atial **B**: Rotation around the Y axis
SPC	**Sp**atial **C**: Rotation around the Z axis

NC block

```
N50 PLANE SPATIAL SPA+27 SPB+0 SPC
    +45 .....*
```

Defining the working plane with the projection angle: PLANE PROJECTED

Application

Projection angles define a working plane by specifying two angles that you can communicate by projection of the 1st coordinate plane (Z/X on tool axis Z) and 2nd coordinate plane (Y/Z on tool axis Z) to the working levels to be be defined.

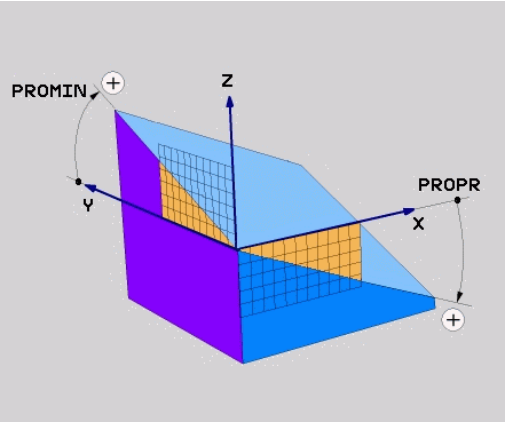

> **Before programming, note the following**
>
> You can only use projection angles if the angle definitions are given with respect to a rectangular cuboid. Otherwise there will be deformations on the workpiece.
>
> Parameter description for the positioning behavior.
>
> **Further Information:** Specifying the positioning behavior of the PLANE function, page 439

Input parameters

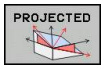

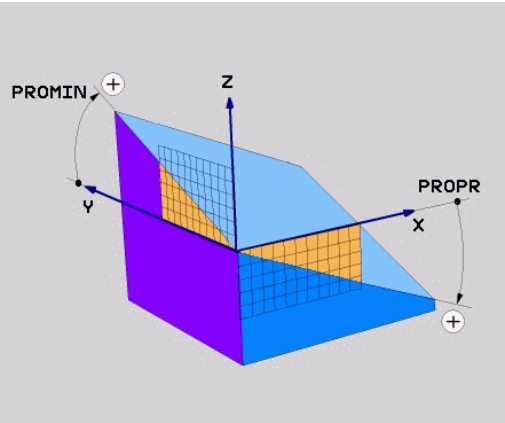

- **Projection angle on 1st coordinate plane?**:Projected angle of the tilted working plane to the 1st coordinate plane of the fixed machine coordination system (Z/X for tool axis Z). Input range: from -89.9999° to +89.9999°. The 0° axis is the main axis of the active working plane (X for tool axis Z, positive direction)
- **Proj. angle on 2nd coordinate plane?**: Projected angle on 2nd coordinate plane of the fixed machine coordinate system (Y/Z in tool axis Z). Input range: from –89.9999° to +89.9999°. The 0° axis is the minor axis of the active machining plane (Y for tool axis Z)
- **ROT angle of tilted plane?**: Rotation of the tilted coordinate system around the tilted tool axis (corresponds analogously to a rotation with Cycle 10 ROTATION). With the rotation angle, you can simply define the direction of the main axis of the machining plane (X on tool axis Z, Z on tool axis Y). Input range: -360° to +360°
- Continue with the positioning properties
  Further Information: Specifying the positioning behavior of the PLANE function, page 439

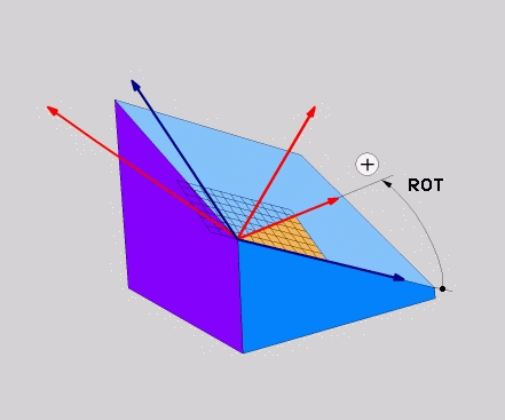

NC block

```
N50 PLANE PROJECTED PROPR+24 PROMIN+24 PROROT+30 .....*
```

Abbreviations used:

PROJECTED	Projected
PROPR	Principle plane
PROMIN	Minor plane
ROT	Rotation

Defining the working plane with the Euler angle: PLANE EULER

Application

Euler angles define a machining plane through up to three **rotations about the respectively tilted coordinate system**. The Swiss mathematician Leonhard Euler defined these angles. When applied to the machine coordinate system, they have the following meanings:

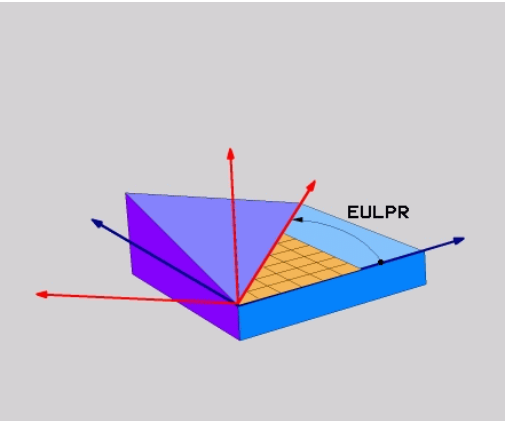

Precession angle: **EULPR**	Rotation of the coordinate system around the Z axis
Nutation angle: **EULNU**	Rotation of the coordinate system around the X axis already shifted by the precession angle
Rotation angle: **EULROT**	Rotation of the tilted machining plane around the tilted Z axis

Before programming, note the following

Parameter description for the positioning behavior.

Further Information: Specifying the positioning behavior of the PLANE function, page 439

Input parameters

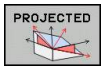

- **Rot. angle Main coordinate plane?:** Rotary angle **EULPR** around the Z axis. Please note:
  - Input range: -180.0000° to 180.0000°
  - The 0° axis is the X axis
- **Tilting angle tool axis?**: Tilting angle **EULNUT** of the coordinate system around the X axis shifted by the precession angle. Please note:
  - Input range: 0° to 180.0000°
  - The 0° axis is the Z axis
- **ROT angle of tilted plane?**: Rotation **EULROT** of the tilted coordinate system around the tilted Z axis (corresponds to a rotation with Cycle 10 ROTATION). Use the rotation angle to simply define the direction of the X axis on the tilted working plane. Please note:
  - Input range: 0° to 360.0000°
  - The 0° axis is the X axis
- Continue with the positioning properties **Further Information:** Specifying the positioning behavior of the PLANE function, page 439

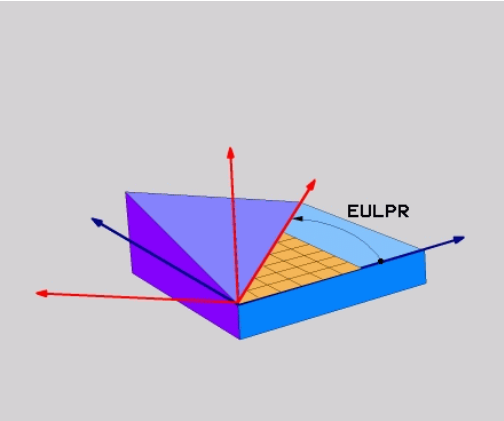

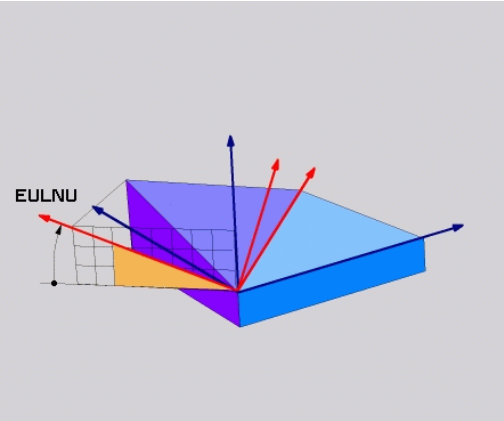

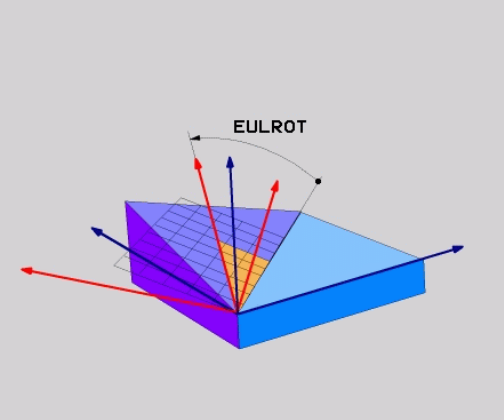

NC block

```
N50 PLANE EULER EULPR45 EULNU20 EULROT22 .....*
```

Abbreviations used

Abbreviation	Meaning
EULER	Swiss mathematician who defined these angles
EULPR	**Pr**ecession angle: angle describing the rotation of the coordinate system around the Z axis
EULNU	**Nu**tation angle: angle describing the rotation of the coordinate system around the X axis shifted by the precession angle
EULROT	**Rot**ation angle: angle describing the rotation of the tilted machining plane around the tilted Z axis

Defining the working plane with two vectors: PLANE VECTOR

Application

You can use the definition of a working plane via **two vectors** if your CAD system can calculate the base vector and normal vector of the tilted machining plane. A normalized input is not necessary. The TNC calculates the normal, so you can enter values between –9.999999 and +9.999999.

The base vector required for the definition of the machining plane is defined by the components **BX,BY** and **BZ.** The normal vector is defined by the components **NX**, **NY** and **NZ**.

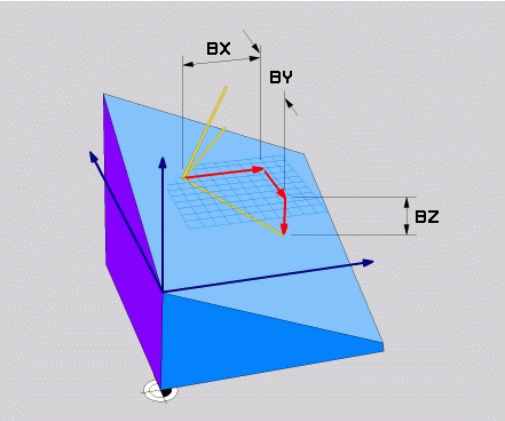

Before programming, note the following

The base vector defines the direction of the principal axis in the tilted machining plane, and the normal vector determines the orientation of the tilted machining plane, and at the same time is perpendicular to it.

The TNC calculates standardized vectors from the values you enter.

Parameter description for the positioning behavior. **Further Information:** Specifying the positioning behavior of the PLANE function, page 439

Input parameters

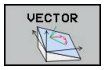

- **X component of base vector?**: X component **BX** of the base vector B; input range: from -9.9999999 to +9.9999999
- **Y component of base vector?**: Y component **BY** of the base vector B; input range: from -9.9999999 to +9.9999999
- **Z component of base vector?**: Z component **BZ** of the base vector B; input range: from -9.9999999 to +9.9999999
- **X component of normal vector?**: X component **NX** of the normal vector N; input range: from -9.9999999 to +9.9999999
- **Y component of normal vector?**: Y component **NY** of the normal vector N; input range: from -9.9999999 to +9.9999999
- **Z component of normal vector?**: Z component **NZ** of the normal vector N; input range: from -9.9999999 to +9.9999999
- Continue with the positioning properties
  Further Information: Specifying the positioning behavior of the PLANE function, page 439

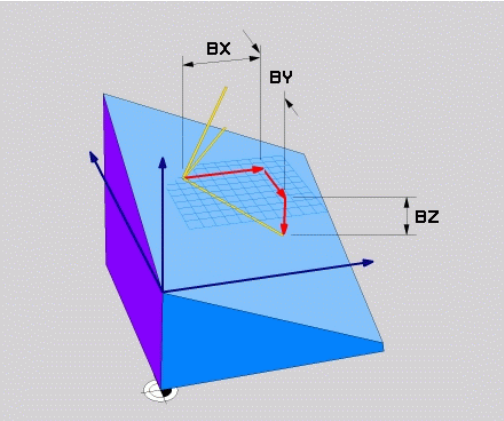

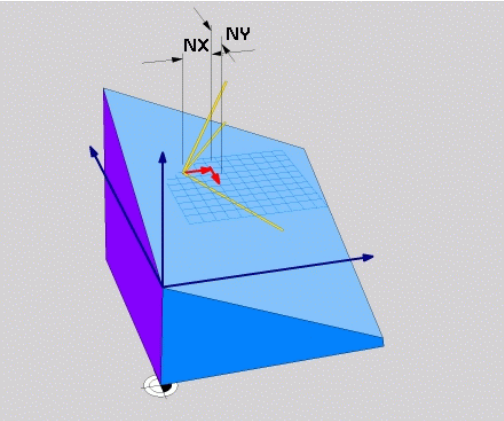

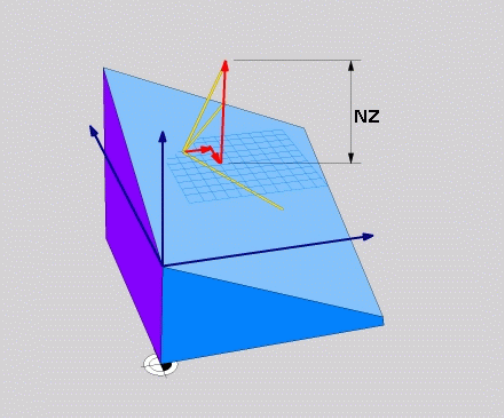

NC block

```
N50 PLANE VECTOR BX0.8 BY-0.4 BZ-0.42 NX0.2 NY0.2 NZ0.92 ..*
```

Abbreviations used

Abbreviation	Meaning
VECTOR	Vector
BX, BY, BZ	**B**ase vector: **X**, **Y** and **Z** components
NX, NY, NZ	**N**ormal vector: **X**, **Y** and **Z** components

Defining the working plane via three points: PLANE POINTS

Application

A working plane can be uniquely defined by entering **any three points P1 to P3 in this plane**. This possibility is realized in the **PLANE POINTS** function.

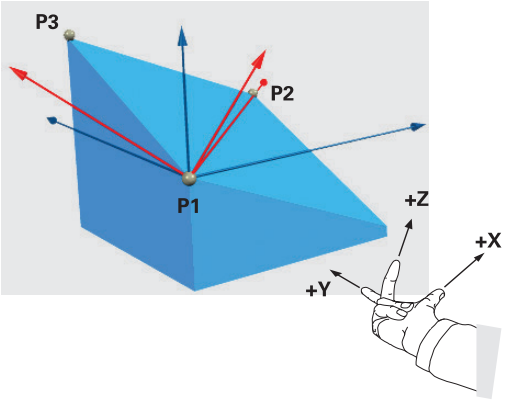

Before programming, note the following

The connection from Point 1 to Point 2 determines the direction of the tilted main axis (X for tool axis Z).

The direction of the tilted tool axis is determined by the position of Point 3 relative to the connecting line between Point 1 and Point 2. Use the right-hand rule (thumb = X axis, index finger = Y axis, middle finger = Z axis) to remember: thumb (X axis) points from point 1 to point 2, index finger (Y axis) points parallel to the tilted Y axis in the direction of point 3. Then the middle finger points in the direction of the tilted tool axis.

The three points define the slope of the plane. The position of the active datum is not changed by the TNC.

Parameter description for the positioning behavior.

Further Information: Specifying the positioning behavior of the PLANE function, page 439

Input parameters

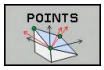

- **X coordinate of 1st plane point?**: X coordinate **P1X** of the 1st plane point
- **Y coordinate of 1st plane point?**: Y coordinate **P1Y** of the 1st plane point
- **Z coordinate of 1st plane point**: Z coordinate **P1Z** of the 1st plane point
- **X coordinate of 2nd plane point?**: X coordinate **P2X** of the 2nd. plane point
- **Y coordinate of 2nd plane point?**: Y coordinate **P2Y** of the 2nd plane point
- **Z coordinate of 2nd plane point?**: Z coordinate **P2Z** of the 2nd plane point
- **X coordinate of 3rd plane point?**: X coordinate **P3X** of the 3rd plane point
- **Y coordinate of 3rd plane point?**: Y coordinate **P3Y** of the 3rd plane point
- **Z coordinate of 3rd plane point?**: Z coordinate **P3Z** of the 3rd plane point
- Continue with the positioning properties **Further Information:** Specifying the positioning behavior of the PLANE function, page 439

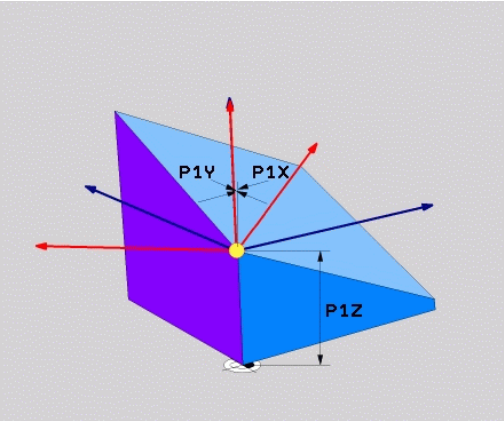

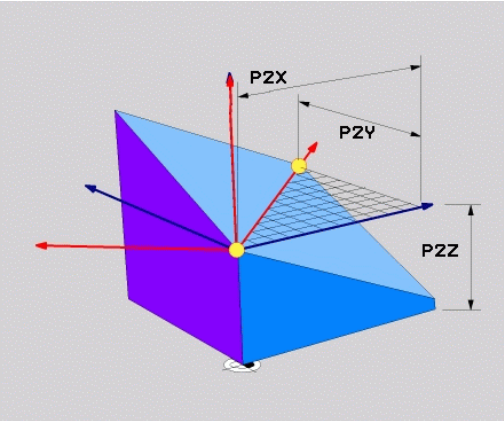

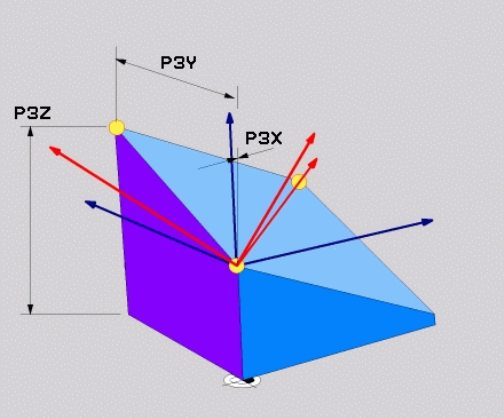

NC block

```
N50 PLANE POINTS P1X+0 P1Y+0 P1Z+20 P2X+30 P2Y+31 P2Z+20
    P3X+0 P3Y+41 P3Z+32.5 .....*
```

Abbreviations used

Abbreviation	Meaning
POINTS	Points

Defining the working plane via a single incremental spatial angle: PLANE SPATIAL

Application

Use an incremental spatial angle when an already active tilted working plane is to be tilted by **another rotation**. Example: machining a 45° chamfer on a tilted plane.

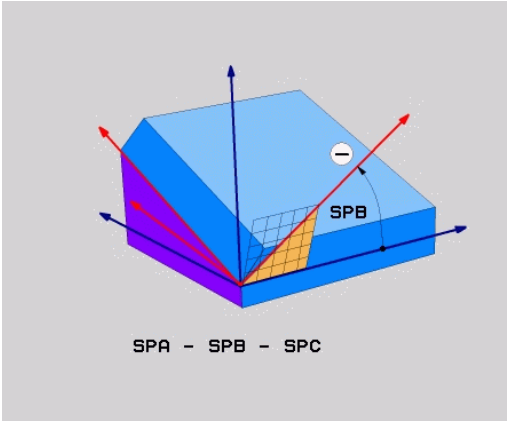

Before programming, note the following

The defined angle is always in effect in respect to the active working plane, regardless of the function you have used to activate it.

You can program any number of **PLANE RELATIVE** functions in a row.

If you want to return to the working plane that was active before the **PLANE RELATIVE** function, define the **PLANE RELATIVE** function again with the same angle but with the opposite algebraic sign.

If you use the **PLANE RELATIVE** function in a non-tilted working plane, then you simply rotate the non-tilted plane about the spatial angle defined in the **PLANE** function.

Parameter description for the positioning behavior.

Further Information: Specifying the positioning behavior of the PLANE function, page 439

Input parameters

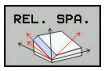

- **Incremental angle?**: Spatial angle by which the active machining plane is to be rotated. Use a soft key to select the axis to be rotated around. Input range: -359.9999° to +359.9999°
- Continue with the positioning properties
  Further Information: Specifying the positioning behavior of the PLANE function, page 439

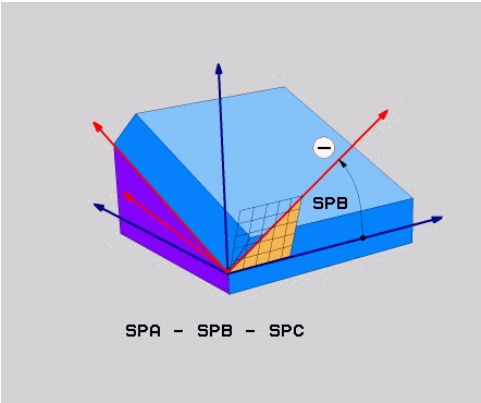

Abbreviations used

Abbreviation	Meaning
RELATIV	Relative to

NC block

```
N50 PLANE RELATIV SPB-45 .....*
```

Tilting the working plane through axis angle: PLANE AXIAL

Application

The **PLANE AXIAL** function defines both the position of the working plane and the nominal coordinates of the rotary axes. This function is particularly easy to use on machines with Cartesian coordinates and with kinematics structures in which only one rotary axis is active.

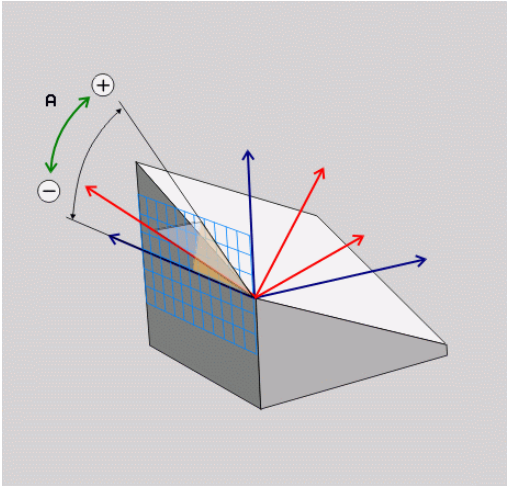

PLANE AXIAL can also be used if you have only one rotary axis active on your machine.

You can use the **PLANE RELATIVE** function after **PLANE AXIAL** if your machine allows spatial angle definitions. Refer to your machine manual.

Before programming, note the following

Enter only axis angles that actually exist on your machine. Otherwise the TNC generates an error message.

Rotary axis coordinates defined with **PLANE AXIAL** are modally effective. Successive definitions therefore build on each other. Incremental input is allowed.

Use **PLANE RESET** to reset the **PLANE AXIAL** function. Resetting by entering 0 does not deactivate **PLANE AXIAL**.

SEQ, **TABLE ROT** and **COORD ROT** have no function in conjunction with **PLANE AXIAL**.

Parameter description for the positioning behavior.

Further Information: Specifying the positioning behavior of the PLANE function, page 439

Input parameters

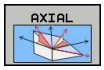

- **Axis angle A?**: Axis angle **to which** the A axis is to be tilted. If entered incrementally, it is the angle **by which** the A axis is to be tilted from its current position. Input range: –99999.9999° to +99999.9999°
- **Axis angle B?**: Axis angle **to which** the B axis is to be tilted. If entered incrementally, it is the angle **by which** the B axis is to be tilted from its current position. Input range: –99999.9999° to +99999.9999°
- **Axis angle C?**: Axis angle **to which** the C axis is to be tilted. If entered incrementally, it is the angle **by which** the C axis is to be tilted from its current position. Input range: –99999.9999° to +99999.9999°
- Continue with the positioning properties
  Further Information: Specifying the positioning behavior of the PLANE function, page 439

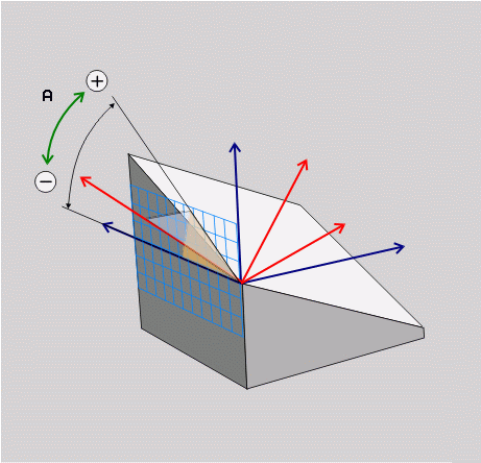

NC block

```
N50 PLANE AXIAL B-45 .....*
```

Abbreviations used

Abbreviation	Meaning
AXIAL	In the axial direction

Specifying the positioning behavior of the PLANE function

Overview

Independently of which PLANE function you use to define the tilted machining plane, the following functions are always available for the positioning behavior:

- Automatic positioning
- Selection of alternate tilting possibilities (not with **PLANE AXIAL**)
- Selection of the type of transformation (not with **PLANE AXIAL**)

> **!** **Danger of collision!**
>
> If you work with Cycle **28 MIRROR IMAGE** in a tilted system, please note the following:
>
> If you program mirroring before the tilting of the working plane, the mirroring also effects the tilting. Exception: Tilting with Cycle 19 and **AXIAL PLANE**.
>
> Mirroring a rotary axis with Cycle **28** only mirrors the motions of the axis, but not the angles defined in the PLANE functions. As a result, the positioning of the axes changes.

Automatic positioning: MOVE/TURN/STAY (entry is mandatory)

After you have entered all parameters for the plane definition, you must specify how the rotary axes will be positioned to the calculated axis values:

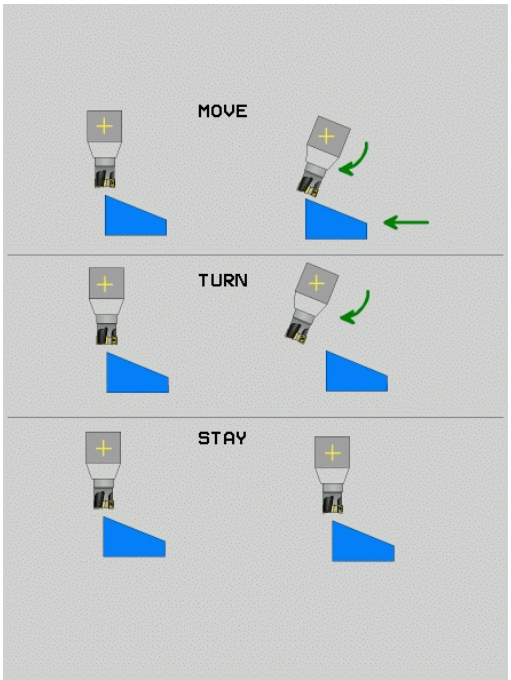

MOVE

- The PLANE function is to automatically position the rotary axes to the calculated position values. The position of the tool relative to the workpiece is to remain the same. The TNC carries out a compensation movement in the linear axes

TURN

- The PLANE function is to automatically position the rotary axes to the calculated position values, but only the rotary axes are positioned. The TNC does **not** carry out a compensation movement on the linear axes

STAY

- You will position the rotary axes later in a separate positioning block

If you have selected the **MOVE** option (**PLANE** function is to tilt the axes automatically with compensating movement), the following two parameters must still be defined: **Distance from center of rotation and tool tip** and **Feed rate? F =** to be defined.

If you have selected the **TURN** option (**PLANE** function is to tilt the axes automatically without any compensating movement), the following parameter must also be defined: **Feed rate? F =** to be defined.

> If you use **PLANE** together with **STAY,** you have to position the rotary axes in a separate block after the **PLANE** function.

- **Dist. tool tip - center of rot.** (incremental): The TNC tilts the tool (or table) relative to the tool tip. The **DIST** parameter shifts the center of rotation of the positioning movement relative to the current position of the tool tip.

> **Note:**
> - If the tool is already at the given distance to the workpiece before positioning, then relatively speaking the tool is at the same position after positioning (see figure in center right, 1 = DIST)
> - If the tool is not at the given distance from the workpiece before tilting, then relatively speaking the tool is offset from the original position after tilting (see figure in bottom right, 1= DIST)

- **Feed rate? F=**: Contour speed at which the tool should be positioned
- **Retraction length in the tool axis?**: Retraction path **MB** is effective incrementally from the current tool position in the active tool axis direction that the TNC approaches **before tilting**. **MB MAX** positions the tool just before the software limit switch.

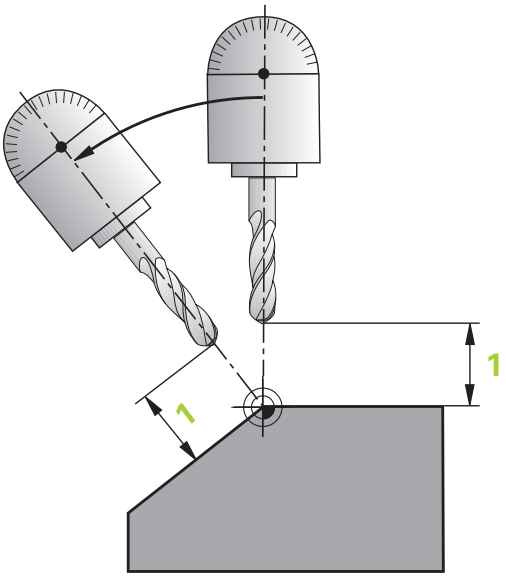

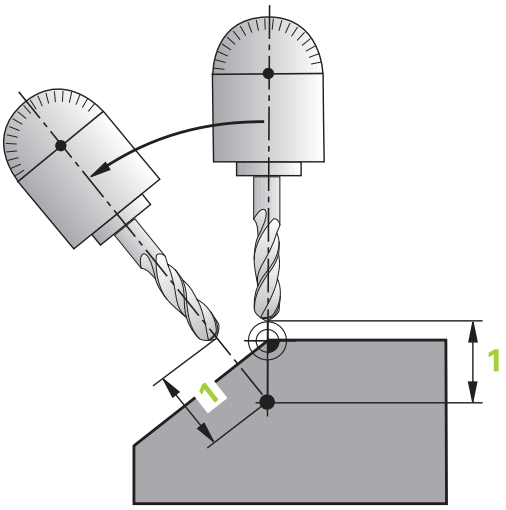

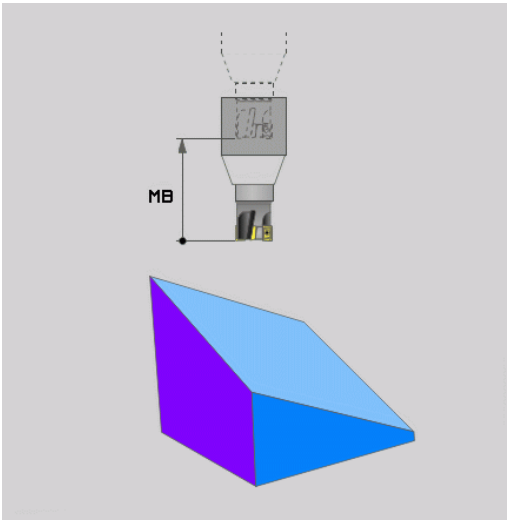

Positioning the rotary axes in a separate block

Proceed as follows if you want to position the rotary axes in a separate positioning block (option **STAY** selected):

> **Danger of collision!**
>
> Pre-position the tool to a position where there is no danger of collision with the workpiece (clamping devices) during positioning.
>
> Do not program mirroring of the rotary axis between the PLANE function and the positioning, otherwise the control positions to the mirrored values but the PLANE function calculates without mirroring.

- Select any **PLANE** function, and define automatic positioning with the **STAY** option. During program execution the TNC calculates the position values of the rotary axes present on the machine, and stores them in the system parameters Q120 (A axis), Q121 (B axis) and Q122 (C axis)
- Define the positioning block with the angular values calculated by the TNC

NC example blocks: Position a machine with a rotary table C and a tilting table A to a space angle of B+45°

...	
N10 G00 Z+250 G40	Position at clearance height
N20 PLANE SPATIAL SPA+0 SPB+45 SPC+0 STAY	Define and activate the PLANE function
N30 G01 A+Q120 C+Q122 F2000	Position the rotary axis with the values calculated by the TNC
...	Define machining in the tilted working plane

Selection of alternate tilting possibilities: SEQ +/– (entry optional)

The position you define for the working plane is used by the TNC to calculate the appropriate positioning of the rotary axes present on the machine. In general there are always two solution possibilities.

Use the **SEQ** switch to specify which possibility the TNC should use:

- **SEQ+** positions the master axis so that it assumes a positive angle. The master axis is the first rotary axis going out from the tool or the last rotary axis going out from the table (depending on the machine configuration)
- **SEQ-** positions the master axis so that it assumes a negative angle.

If the solution you chose with **SEQ** is not within the machine's range of traverse, the TNC displays the **Entered angle not permitted** error message.

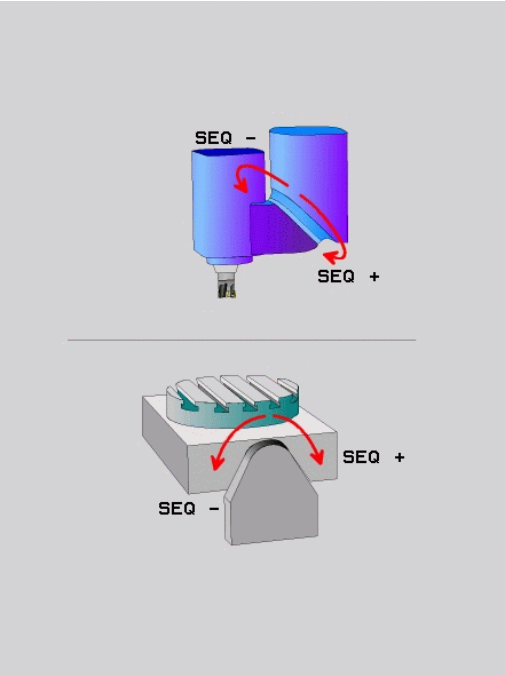

> **!** When the **PLANE AXIS** function is used, the **SEQ** switch is nonfunctional.

If you do not define **SEQ**, the TNC determines the solution as follows:

1. The TNC first checks whether both solution possibilities are within the traverse range of the rotary axes.
2. If they are, then the TNC selects the shortest possible solution.
3. If only one solution is within the traverse range, the TNC selects this solution
4. If neither solution is within the traverse range, the TNC displays the **Entered angle not permitted** error message.

Example for a machine with a rotary table C and a tilting table
A. Programmed function: PLANE SPATIAL SPA+0 SPB+45 SPC+0

Limit switch	Starting position	SEQ	Resulting axis position
None	A+0, C+0	not prog.	A+45, C+90
None	A+0, C+0	+	A+45, C+90
None	A+0, C+0	–	A–45, C–90
None	A+0, C–105	not prog.	A–45, C–90
None	A+0, C–105	+	A+45, C+90
None	A+0, C–105	–	A–45, C–90
–90 < A < +10	A+0, C+0	not prog.	A–45, C–90
–90 < A < +10	A+0, C+0	+	Error message
None	A+0, C–135	+	A+45, C+90

Selecting the type of transformation (entry optional)

For tilting angles that only rotate the coordinate system around the tool axis, a specific function enables you to define the type of transformation:

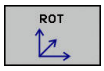

- **COORD ROT** specifies that the PLANE function should only rotate the coordinate system to the defined tilting angle. Compensation is performed using calculations and a rotary axis is not moved

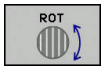

- **TABLE ROT** specifies that the PLANE function should position the rotary axes to the defined tilting angle. Compensation results from rotating the workpiece.

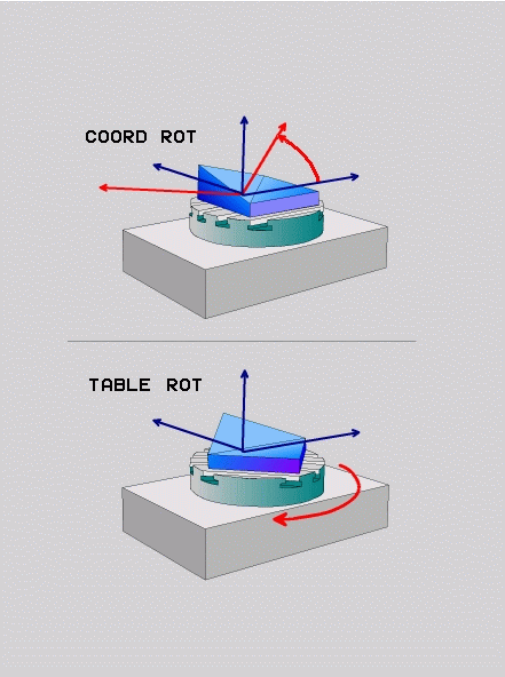

!

When the **PLANE AXIAL** function is used, **COORD ROT** and **TABLE ROT** are nonfunctional.

COORD ROT is active only if tilting is around the tool axis only, e. g. **SPC+45** with tool axis **Z**. As soon as a second swivel axis is required for implementation, **TABLE ROT** is automatically active.

If you use the **TABLE ROT** function in conjunction with a basic rotation and a tilting angle of 0, then the TNC tilts the table to the angle defined in the basic rotation.

Tilt the working plane without rotary axes

This feature must be enabled and adapted by the machine tool builder. Refer to your machine manual.

The machine tool builder must take into account e.g. the precise angle of a mounted angular head in the kinematics description.

You can also align the programmed working plane perpendicular to the tool without rotary axes, e.g. for adapting the working plane for a mounted angular head.

Use the **PLANE SPATIAL** function and the **STAY** positioning behavior to swivel the working plane to the angle specified by the machine tool builder.

Example of mounted angular head with permanent tool direction Y:

NC syntax

```
N10 T 5 G17 S4500*
N20 PLANE SPATIAL SPA+0 SPB-90 SPC+0 STAY*
```

The swivel angle must be precisely adapted to the tool angle, otherwise the TNC outputs an error message.

12.3 Inclined-tool machining in a tilted plane (option 9)

Function

In combination with **M128** and the new **PLANE** functions, **inclined-tool machining** on a tilted machining plane is now possible. Two possibilities are available for definition:

- Inclined-tool machining via incremental traverse of a rotary axis

> Inclined-tool machining in a tilted machining plane only functions with spherical cutters.

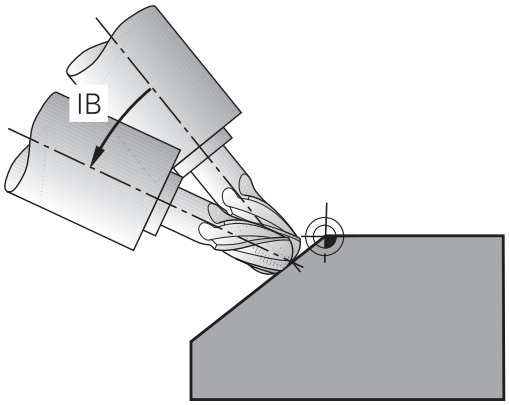

Inclined-tool machining via incremental traverse of a rotary axis

- Retract the tool
- Define any PLANE function; consider the positioning behavior
- Activate M128
- Via a straight-line block, traverse to the desired incline angle in the appropriate axis incrementally

Example NC blocks

...	
N12 G00 G40 Z+50 *	Position at clearance height
N13 PLANE SPATIAL SPA+0 SPB-45 SPC+0 MOVE ABST50 F900 *	Define and activate the PLANE function
N14 M128 *	Activate M128
N15 G01 G91 F1000 B-17 *	Set the incline angle
...	Define machining in the tilted working plane

12.4 Miscellaneous functions for rotary axes

Feed rate in mm/min on rotary axes A, B, C: M116 (option 8)

Standard behavior

The TNC interprets the programmed feed rate of a rotary axis in degrees/min (in mm programs and also in inch programs). The feed rate therefore depends on the distance from the tool center to the center of the rotary axis.

The larger this distance becomes, the greater the contouring feed rate.

Feed rate in mm/min on rotary axes with M116

The machine geometry must be specified by the machine tool builder in the description of kinematics.

M116 works only on rotary tables. M116 cannot be used with swivel heads. If your machine is equipped with a table/head combination, the TNC ignores the swivel-head rotary axes.

M116 is also effective if the tilted working plane is active and in combination with M128 if you used the **M138** function to select rotary axes. **Further Information:** Selecting tilting axes: M138, page 452 Then **M116** affects only those rotary axes that were selected with **M138**.

The TNC interprets the programmed feed rate of a rotary axis in mm/min (or 1/10 inch/min). In this case, the TNC calculates the feed for the block at the start of each block. With a rotary axis, the feed rate is not changed during execution of the block even if the tool moves toward the center of the rotary axis.

Effect

M116 is effective in the working plane. Reset M116 with M117. At the end of the program, M116 is also ineffective.

M116 becomes effective at the start of block.

Shortest-path traverse of rotary axes: M126

Standard behavior

The behavior of the TNC when positioning the rotary axes depends on the machine tool. Refer to your machine manual.

The standard behavior of the TNC while positioning rotary axes whose display has been reduced to values less than 360° is dependent on machine parameter **shortestDistance** (no. 300401). This machine parameter defines whether the TNC should consider the difference between nominal and actual position, or whether it should always (even without M126) choose the shortest path to the programmed position. Examples:

Actual position	Nominal position	Traverse
350°	10°	–340°
10°	340°	+330°

Behavior with M126

With M126, the TNC will move the axis on the shorter path of traverse for rotary axes whose display is reduced to values less than 360°. Examples:

Actual position	Nominal position	Traverse
350°	10°	+20°
10°	340°	–30°

Effect

M126 becomes effective at the start of block.

To cancel M126, enter M127. At the end of program, M126 is automatically canceled.

Reducing display of a rotary axis to a value less than 360°: M94

Standard behavior

The TNC moves the tool from the current angular value to the programmed angular value.

Example:

Current angular value:	538°
Programmed angular value:	180°
Actual distance of traverse:	-358°

Behavior with M94

At the start of block, the TNC first reduces the current angular value to a value less than 360° and then moves the tool to the programmed value. If several rotary axes are active, M94 will reduce the display of all rotary axes. As an alternative you can enter a rotary axis after M94. The TNC then reduces the display only of this axis.

Example NC blocks

To reduce display of all active rotary axes:

```
N50 M94 *
```

To reduce display of the C axis only:

```
N50 M94 C *
```

To reduce display of all active rotary axes and then move the tool in the C axis to the programmed value:

```
N50 G00 C+180 M94 *
```

Effect

M94 is effective only in the block in which it is programmed.

M94 becomes effective at the start of block.

Maintaining the position of the tool tip when positioning with tilted axes (TCPM): M128 (option 9)

Standard behavior

The TNC moves the tool to the positions given in the machining program. If the position of a tilted axis changes in the program, the resulting offset in the linear axes must be calculated, and traversed in a positioning block.

Behavior with M128 (TCPM: Tool Center Point Management)

The machine geometry must be specified by the machine tool builder in the description of kinematics.

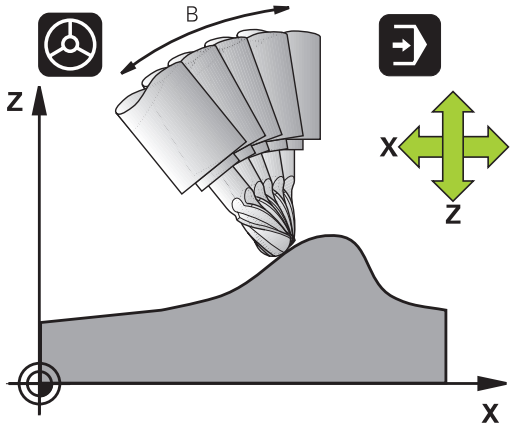

If the position of a controlled tilted axis changes in the program, the position of the tool tip in relation to the workpiece remains the same during the tilting process.

Caution: Danger to the workpiece!

For tilted axes with Hirth coupling: Do not change the position of the tilted axis until after retracting the tool. Otherwise you might damage the contour when disengaging from the coupling.

After **M128** you can program another feed rate, at which the TNC will carry out the compensation movements in the linear axes.

If you want to change the position of the tilting axis with the handwheel during the program run, use **M128** along with **M118**. Superimposing handwheel positioning is implemented with active **M128**, depending on the setting in the 3D-ROT menu of the **Manual Operation** operating mode, in the active coordinate system or in the machine-based coordinate system.

The functions **TCPM** or **M128** in conjunction with the dynamic collision monitoring **M118** are not available.

Before positioning with **M91** or **M92** and before a **T BLOCK**, **RESET** M128.

To avoid contour gouging you must use only radius cutters with **M128**.

The tool length must refer to the spherical center of the tool tip.

If **M128** is active, the TNC shows the TCPM symbol in the status display.

M128 on tilting tables

If you program a tilting table movement while **M128** is active, the TNC rotates the coordinate system accordingly. If, for example, you rotate the C axis by 90° (through a positioning command or datum shift) and then program a movement on the X axis, the TNC executes the movement on the machine axis Y.

The TNC also transforms the set datum, which has been shifted by the movement of the rotary table.

M128 with 3-D tool compensation

If you carry out a three-dimensional tool compensation with active **M128** and active radius compensation /**G41**/**G42**, the TNC will automatically position the rotary axes for certain machine geometrical configurations (peripheral milling).

Further Information: Three-dimensional tool compensation (option 9), page

Effect

M128 becomes effective at the start of the block, **M129** at the end of the block. **M128** is also effective in the manual operating modes and remains active even after a change of mode. The feed rate for the compensation movement will be effective until you program a new feed rate or until you cancel **M128** with **M129**.

Enter **M129** to cancel **M128**. The TNC also cancels **M128** if you select a new program in a program run operating mode.

Example NC blocks

Feed rate of 1000 mm/min for compensation movements:

```
N50 G01 G41 X+0 Y+38.5 IB-15 F125 M128 F1000 *
```

Inclined machining with noncontrolled rotary axes

If you have noncontrolled rotary axes (counting axes) on your machine, then in combination with M128 you can also perform inclined machining operations with these axes.

1 Manually traverse the rotary axes to the desired positions. M128 must not be active!
2 Activate M128: The TNC reads the actual values of all rotary axes present, calculates from this the new position of the tool center point, and updates the position display
3 The TNC performs the necessary compensating movement in the next positioning block
4 Carry out the machining operation
5 At the end of the program, reset M128 with M129, and return the rotary axes to their initial positions

Proceed as follows:

As long as M128 is active, the TNC monitors the actual positions of the noncontrolled rotary axes. If the actual position deviates from the nominal position by a value greater than that defined by the machine manufacturer, the TNC outputs an error message and interrupts program run.

Selecting tilting axes: M138

Standard behavior

The TNC performs M128, and tilts the working plane, only in those axes for which the machine tool builder has set the appropriate machine parameters.

Behavior with M138

The TNC performs the above functions only in those tilting axes that you have defined using M138.

> If you restrict the number of tilting axes with the **M138** function, your machine may provide only limited tilting possibilities. When calculating the axis angle in the selected axis, the control sets the value 0.

Effect

M138 becomes effective at the start of the block.

You can reset M138 by reprogramming it without entering any axes.

Example NC blocks

Perform the above-mentioned functions only in the tilting axis C:

```
N50 G00 Z+100 G40 M138 C *
```

Compensating the machine's kinematics configuration for ACTUAL/NOMINAL positions at end of block: M144 (option 9)

Standard behavior

The TNC moves the tool to the positions given in the machining program. If the position of a tilted axis changes in the program, the resulting offset in the linear axes must be calculated, and traversed in a positioning block.

Behavior with M144

The TNC calculates into the position value any changes in the machine's kinematics configuration which result, for example, from adding a spindle attachment. If the position of a controlled tilted axis changes, the position of the tool tip to the workpiece is also changed. The resulting offset is calculated in the position display.

Positioning blocks with M91/M92 are permitted if M144 is active.

The position display in the operating modes FULL SEQUENCE and SINGLE BLOCK does not change until the tilting axes have reached their final position.

Effect

M144 becomes effective at the start of the block. M144 does not function in connection with M128 or a tilted working plane.

You can cancel M144 by programming M145.

The machine geometry must be specified by the machine tool builder in the description of kinematics.

The machine tool builder determines the behavior in the automatic and manual operating modes. Refer to your machine manual.

12.5 Peripheral milling: 3-D radius compensation with M128 and radius compensation (G41/G42)

Application

With peripheral milling, the TNC displaces the tool perpendicular to the direction of movement and perpendicular to the tool direction by the sum of the delta values **DR** (tool table and **T** block). Determine the compensation direction with radius compensation **G41/G42** (direction of movement Y+).

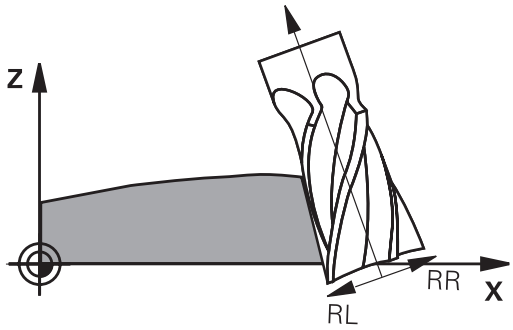

For the TNC to be able to reach the set tool orientation, you need to activate the **M128** function and subsequently the tool radius compensation. The TNC then positions the rotary axes automatically so that the tool can reach the orientation defined by the coordinates of the rotary axes with the active compensation.

Further Information: Maintaining the position of the tool tip when positioning with tilted axes (TCPM): M128 (option 9), page 449

This function is possible only on machines for which you can define spatial angles for the tilting axis configuration. Refer to your machine manual.

The TNC is not able to automatically position the rotary axes on all machines.

Refer to your machine manual.

Note that the TNC makes a compensating movement by the defined **delta values**. The tool radius R defined in the tool table has no effect on the compensation.

Danger of collision!

On machines whose rotary axes only allow limited traverse, sometimes automatic positioning can require the table to be rotated by 180°. In this case, make sure that the tool head does not collide with the workpiece or the clamps.

You can define the tool orientation in a G01 block as described below.

Example: Definition of the tool orientation with M128 and the coordinates of the rotary axes

N10 G00 G90 X-20 Y+0 Z+0 B+0 C+0 *	Pre-position
N20 M128 *	Activate M128
N30 G01 G42 X+0 Y+0 Z+0 B+0 C+0 F1000 *	Activate radius compensation
N40 X+50 Y+0 Z+0 B-30 C+0 *	Position the rotary axis (tool orientation)

13

Programming: Pallet Editor

13.1 Pallet management

Application

Pallet table management is a machine-specific function. The standard functional range is described below.

Refer to your machine manual.

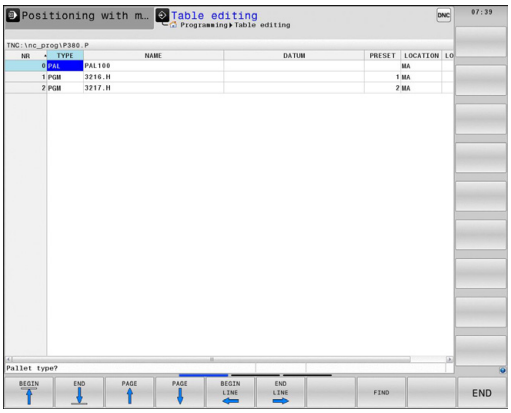

Pallet tables (**.P**) are mainly used in machining centers with pallet changers. The pallet tables call the different pallets with the corresponding machining programs and activate all defined datums and datum tables.

Without a pallet changer you can use pallet tables to process NC programs with different datums in sequence with just one press of **NC START**.

If you want to create or manage pallet tables, the name of the file must begin with a letter.

Pallet tables contain the following information:

- **NR**: The control produces the entry automatically when new rows are added. The entry is required for the entry field **Line number =** of the **BLOCK SCAN** function.
- **TYPE**: Input is obligatory. The control differentiates between the entries Pallet **PAL**, fixture **FIX** or NC program **PGM**. Select the entries using the **ENT** key and arrow keys.
- **NAME**: Entry is obligatory. The machine manufacturer may set names for pallets and fixtures (see machine manual), but you specify the program names. If the files are not saved in the pallet table directory, you must enter the complete paths.
- **DATUM**: Entry is only required when using datum tables. If the files are not saved in the pallet table directory, you must enter the complete paths. You activate datums from the datum tables in the NC program using Cycle 7.
- **PRESET**: Entry is only required when using different datums. Enter the required preset numbers.
- **LOCATION**: Entry is obligatory. The entry **MA** indicates that the machine is loaded with a pallet or fixture that can be machined. The TNC only machines pallets or fixtures identified by **MA**. Press the **ENT** key to enter **MA**. Press the **NO ENT** key to remove the entry.
- **LOCK**: Entry is optional. Using an ***** you can exclude the row of the pallet table from processing. Press the **ENT** key to identify the row with the entry *****. Press the **NO ENT** key to cancel the lock. You can lock the execution for individual NC programs, fixtures or entire pallets. Non-locked lines (e.g. PGM) of a locked pallet will also not be executed.

Soft key	Editing function
BEGIN	Select the table start
END	Select the table end
PAGE	Select the previous page in the table
PAGE	Select the next page in the table
INSERT LINE	Insert as last row in the table
DELETE LINE	Delete the last row in the table
APPEND N LINES	Add the number of rows that can be entered at the end of the table
COPY FIELD	Copy the current value
PASTE FIELD	Insert the copied value
BEGIN LINE	Select start of row
END LINE	Select end of row
FIND	Search for text or value
HIDE/ SORT/ COLUMNS	Sort or hide table columns
EDIT CURRENT FIELD	Edit the current field
SORT	Sort by column content
MORE FUNCTIONS	Miscellaneous functions, e.g. saving
SELECT	Open dialog for file path selection

Selecting pallet table

- Select file manager in **Programming** mode or the Program Run operating modes: Press the **PGM MGT** key
- Display all type .P files: Press the **SELECT TYPE** and **SHOW ALL** .P soft keys
- Select a pallet table with the arrow keys, or enter a new file name to create a new table
- Confirm your entry with the **ENT** key

> Use the screen layout key to switch between table view and list view

Exit pallet table

- To call the file manager, press the **PGM MGT** key
- To select a different type of file, press the **SELECT TYPE** soft key and the soft key for the desired file type, e.g. **SHOW .I**
- Select the desired file

Processing pallet table

> A machine parameter defines whether the pallet table is to be executed blockwise or continuously.

- In the **Program run, full sequence** or **Program run, single block** operating mode, select the file manager: Press the **PGM MGT** key
- Display all type .P files: Press the **SELECT TYPE** and **SHOW .P** soft keys
- Select the pallet table with the arrow keys and confirm with **ENT**
- Execute the pallet table: Press the **NC START** key

Screen layout when working in the pallet table

If you want to see the program content and the content of the pallet table at the same time, select the screen layout **PALLET + PROGRAM**. During execution, the TNC then shows program blocks to the left and the pallet to the right. To check the program content before execution, proceed as follows:

- Select pallet table
- With the arrow keys, choose the program you would like to check
- Press the **OPEN PGM** soft key: the TNC displays the selected program on the screen. You can now page through the program with the arrow keys
- Back to the pallet table: Press the **END PGM PAL** soft key

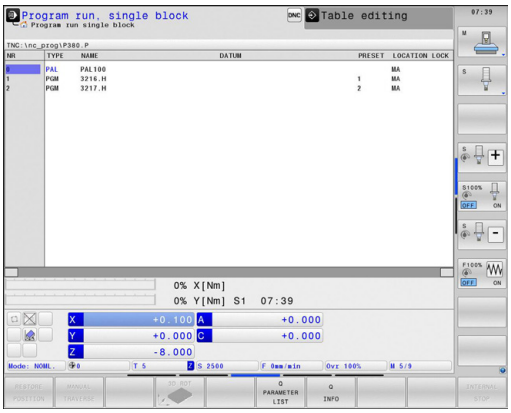

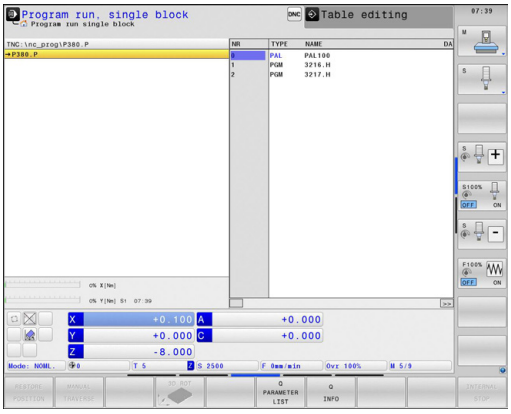

14

Programming: Turning Operations

14.1 Turning operations on milling machines (option 50)

Introduction

Special types of milling machines allow performing both milling and drilling operations. A workpiece can thus be machined completely on one machine without rechucking, even if complex milling and turning applications are required.

Turning operations are machining processes by which workpieces are rotated, thus implementing the cutting movements. A fixed tool carries out infeed and feed movements. Turning applications, depending on machining direction and task, are subdivided into various production processes, e.g.longitudinal turning, face turning, groove turning or thread turning.

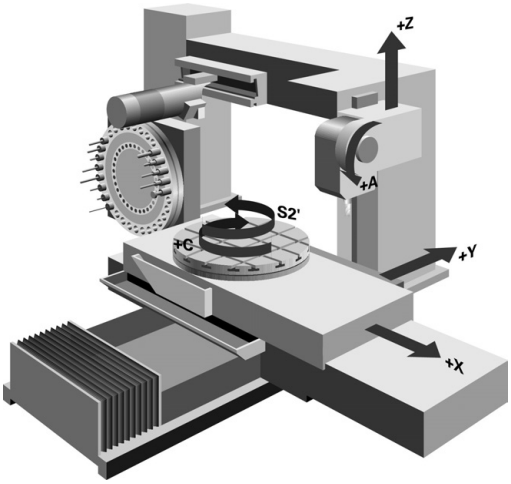

> The TNC offers you several cycles for each of the various production processes.
>
> **Further information:** Cycle Programming User's Manual

On the TNC you can simply switch between Milling and Turning mode within the NC program. In Turning mode, the rotary table serves as turning spindle, whereas the milling spindle with the tool is fixed. This enables rotationally symmetric contours to be created. The preset must be in the center of the turning spindle.

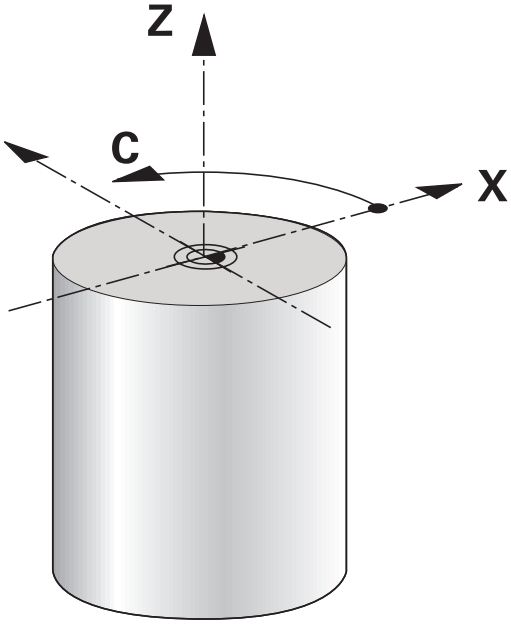

With the management of turning tools, other geometric descriptions are considered than with milling or drilling tools. To be able to execute tool radius compensation, for example, you have to define the tool radius. The TNC provides special tool management for turning tools to support this definition process.

Further Information: Tool data, page 473

Different cycles are available for machining. These can also be used with additional swivel axes.

Further Information: Inclined turning, page 486

The assignment of the axes with turning is defined so that the X coordinates describe the diameter of the workpiece and the Z coordinates the longitudinal positions.

Programming is thus always done on the XZ coordinate plane. The machine axes to be used for the required movements depend on the respective machine kinematics and are determined by the machine manufacturer. This makes NC programs with turning functions largely exchangeable and independent of the machine model.

14.2 Basic functions (option 50)

Switching between milling/turning mode of operation

Switching the machine kinematics is a machine-specific function.

The machine has to have been adapted by the machine manufacturer for turning operations and switching the mode of operation. Refer to your machine manual.

To switch between milling and turning operations you must switch to the specific mode.

You can switch these operating modes with the NC functions **FUNCTION MODE TURN** and **FUNCTION MODE MILL**.

The TNC shows a symbol in the status display when the turning mode is active

Icon	Mode of operation
	Turning mode active: **FUNCTION MODE TURN**
No symbol	Milling mode active: **FUNCTION MODE MILL**

When the operating modes are toggled the TNC executes a macro that defines the machine-specific settings for the specific operating mode. With the NC functions **FUNCTION MODE TURN** and **FUNCTION MODE MILL** you can activate a machine kinematic model that the machine manufacturer has defined and saved in the macro.

The preset must be in the center of the turning spindle in turning mode.

The position of the tool tip must be aligned to the center of the turning spindle. Position the Y coordinates in Turning mode to the center of the turning spindle.

Check the orientation of the tool spindle. The tool tip must be aligned to the center of the turning spindle for outside machining. The tool tip must be aligned opposite to the center of the turning spindle for inside machining.

Check whether the rotation direction of the turning spindle is correct for the loaded tool.

If you process heavy workpieces with high speeds then high physical forces occur. Ensure that the workpiece is firmly clamped to avoid accidents or machine damage.

In Turning mode, diameter values are displayed on the X axis position display. The TNC then shows a diameter symbol on the position display.

In Turning mode, the spindle potentiometer is effective on the turning spindle (rotary table).

Switching mode is not possible if "Tilting the working plane" or TCPM is active.

In Turning mode, no coordinate conversions are permitted except for the datum shift cycle.

You can also use the smartSelect function to define the turning functions.

Further Information: Overview of special functions, page 378

Entering the operation mode:

SPEC FCT
- Show the soft-key row with special functions

TURNING PROGRAM FUNCTIONS
- Select the menu for **TURNING PROGRAM FUNCTIONS**

BASIC FUNCTIONS
- Select **BASIC FUNCTIONS**

FUNCTION MODE
- Select **FUNCTION MODE**

TURN
- Select the function for Turning or Milling mode
- Select the kinematic model that is to be activated with switchover (machine-dependent function). If you do not want to define a kinematic model, confirm with the **NO ENT** key

NC syntax

```
11 FUNCTION MODE TURN "AC_TABLE" ; ACTIVATE TURNING MODE
12 FUNCTION MODE MILL "B_HEAD" ; ACTIVATE MILLING MODE
```

Graphic display of turning operations

You can simulate turning operations in **Test Run** mode. The requirement for this is a workpiece blank definition suitable for the turning process and option number 20.

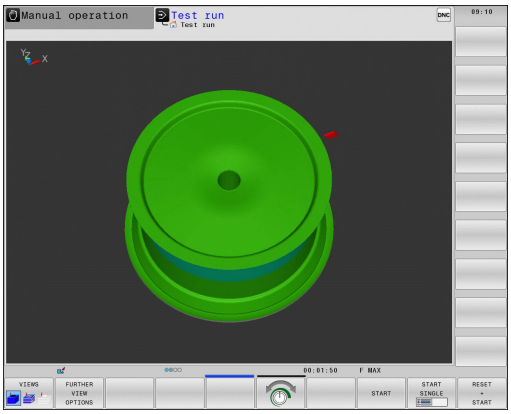

> The machining times shown for milling/turning operations in the simulation do not correspond to the actual machining times.

Graphic display in the Programming mode of operation

You can graphically simulate turning processes with the line graphic in **Programming** mode. To display the traverse movements in turning mode in **Programming** mode, change the layout using the soft keys.

Further Information: Generating a graphic for an existing program, page 157

The standard assignment of the axes with turning is defined so that the X coordinates describe the diameter of the workpiece and the Z coordinates the longitudinal positions.

Even when turning occurs in a 2D plane (X and Z coordinates), with a rectangular workpiece blank you must still program the Y values when defining the workpiece blank.

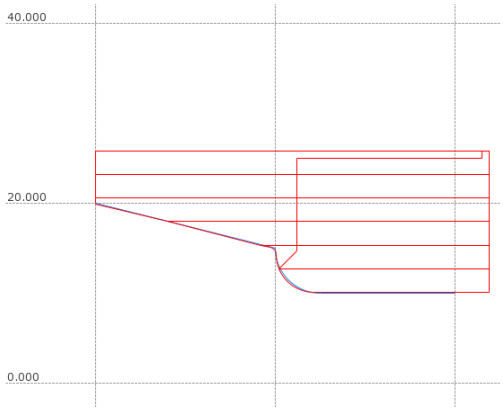

NC syntax

%LT 200 G71 *	
N10 G30 G18 X+0 Y-1 Z-50 *	Define the workpiece blank for graphic workpiece simulation
N20 G31 G90 X+87 Y+1 Z+2 *	
N30 T301 *	Tool call
N40 G00 G40 G90 Z+250 *	Retract the tool in the spindle axis at rapid traverse
N50 FUNCTION MODE TURN *	Activate Turning mode

Program spindle speed

If you machine at constant cutting speed, the selected gear range limits the possible spindle speed range. The possible gear ranges (if applicable) depend on your machine.

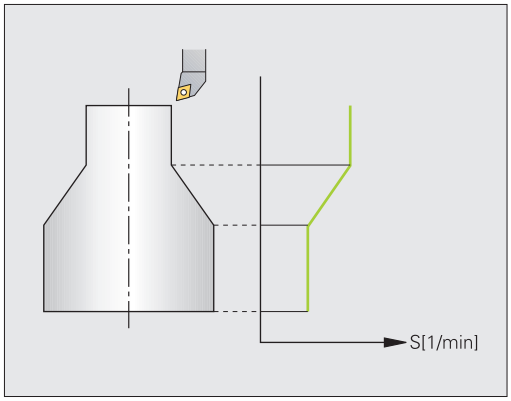

With turning you can machine both at constant spindle speed and constant cutting speed.

If you machine at constant cutting speed **VCONST:ON**, the TNC modifies speed according to the distance of the tool tip to the center of the turning spindle. The TNC increases table speed with positioning in the direction of the turning center and reduces speed with movements away from the turning center.

For processing with constant spindle speed **VCONST:OFF**, speed is independent of the tool position.

Use **FUNCTION TURNDATA SPIN** to define the speed. The TNC now provides the following entry elements:

- VCONST: Constant cutting speed on/off (obligatory)
- VC: Cutting speed (optional)
- S: Nominal speed when no constant cutting speed is active (optional)
- S MAX: Maximum speed with constant cutting speed (optional), is reset with S MAX 0
- gearrange: Gear range for the turning spindle (optional)

Defining the speed:

SPEC FCT
- Show the soft-key row with special functions

TURNING PROGRAM FUNCTIONS
- Select the menu for **TURNING PROGRAM FUNCTIONS**

FUNCTION TURNDATA
- Select **FUNCTION TURNDATA**

TURNDATA SPIN
- Select **TURNDATA SPIN**

VCONST: ON
- Select the function for speed entry **VCONST:**

Cycle G800 limits maximum speed with eccentric turning. To reset, program **FUNCTION TURNDATA SPIN SMAX0**.

NC syntax

3 FUNCTION TURNDATA SPIN VCONST:ON VC:100 GEARRANGE:2	Definition of a constant cutting speed in gear range 2
3 FUNCTION TURNDATA SPIN VCONST:OFF S550	Definition of a constant spindle speed
...	

Feed rate

With turning, feed rates are often specified in millimeters per revolution. The TNC moves the tool according to a defined value for each spindle revolution. The resulting contouring feed rate is thus dependent on the speed of the turning spindle. With high speeds the TNC increases the feed rate and with low speeds reduces the feed rate. With uniform cutting depth you can machine with constant cutting force to achieve a constant cut thickness.

The programmed feed rate on a TNC is by default always interpreted in millimeters per minute (mm/min). If you wish to define feed rate in millimeters per revolution (mm/1), you must program **M136**. The TNC then interprets all subsequent feed rate specifications in mm/1 until **M136** is canceled.

M136 is effective modally at the beginning of the block and can be canceled with **M137**.

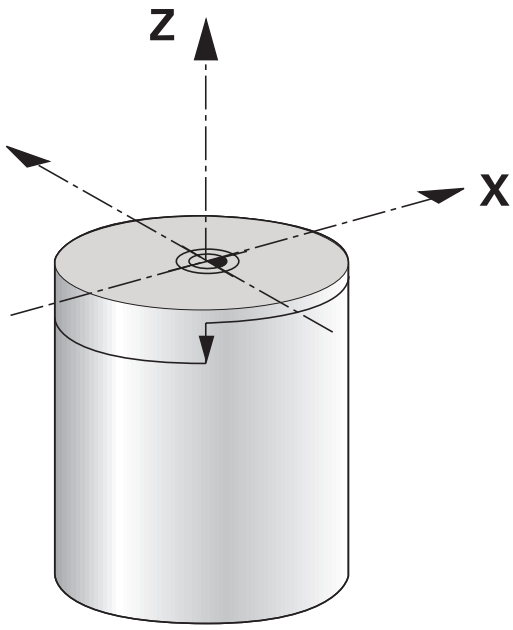

NC syntax

%LT 200 G71 *	
N40 G00 G40 G90 X+102 Z+2	Movement at rapid traverse
...	
N30 G01 X+87 F200 *	Movement at a feed rate of 200 mm/min
N40 M136 *	Feed rate in millimeters per revolution
N50 G01 X+154 F0.2 *	Movement at a feed rate of 0.2 mm/1
...	

14.3 Unbalance functions (option 50)

Unbalance while turning

General information

The machine has to have been adapted by the machine manufacturer for monitoring and measuring unbalance. The unbalance functions are not required some machine types. These functions might not be available on your machine. Refer to your machine manual.

The unbalance functions described here are basic functions that are set up and adapted to the machine by the machine manufacturer. The scope and effect of the described functions may therefore vary from machine to machine. The machine manufacturer may also provide different unbalance functions. Refer to your machine manual.

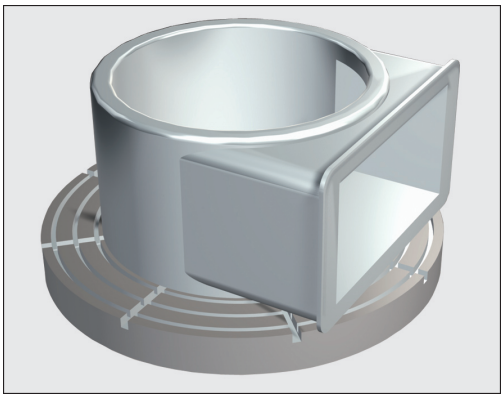

In a turning operation, the tool is in a fixed position, whereas the rotary table and the clamped workpiece rotate. Depending on the size of the workpiece, the mass that is set in rotation can be very large. As the workpiece rotates, it creates an outward centrifugal force.

The centrifugal force that occurs basically depends on the rotational speed, the mass and the unbalance of the workpiece. An imbalance occurs when a body whose mass is not evenly distributed in terms of a symmetrical rotation is brought into a circular motion. If the mass object is rotating, this creates outward-acting centrifugal forces. If the rotating mass is evenly distributed, the centrifugal forces cancel each other out.

Unbalance is significantly influenced by the structural shape of the workpiece (e.g. non-symmetrical pump body) and by the chucking equipment. As these factors frequently cannot be changed, you should compensate any existing unbalance by means of balancing weights. The TNC provides the **MEASURE UNBALANCE** cycle for this purpose. The cycle determines the existing unbalance and calculates the mass and position of the required balancing mass.

The rotation of the workpiece creates centrifugal forces that can cause vibration (resonance), depending on the unbalance. This vibration has a negative effect on the machining process and reduces the tool life. High centrifugal forces can damage the machine or push the workpiece out of the fixture.

Check the unbalance whenever you clamp a new workpiece. If required, use balancing weights to compensate any imbalance.

The removal of material during machining will change the mass distribution within the workpiece. This may also have an influence on workpiece unbalance. Therefore, unbalance checks should also be carried out between machining steps.

Keep in mind the mass and unbalance of the workpiece when choosing the speed. Do not use high speeds with heavy workpieces or high unbalance loads.

Unbalance Monitor function

The Unbalance Monitor function monitors the unbalance of a workpiece in Turning mode. If a maximum unbalance limit specified by the machine manufacturer is exceeded, the TNC issues an error message and initiates an emergency stop. In addition, you can further decrease the permissible unbalance limit by setting the optional machine parameter **limitUnbalanceUsr** (no. 120101). If this limit is exceeded, then the TNC issues an error message. The table rotation is not stopped in this case. The TNC automatically activates the Unbalance Monitor function when you switch to Turning mode. The unbalance monitor is effective until you switch back to Milling mode.

Measure Unbalance cycle

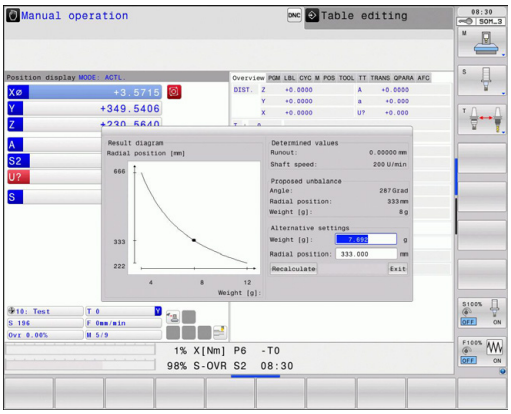

To ensure maximum safety and minimum strain on the machine and workpiece during turning, you should check the unbalance of the clamped workpiece and compensate it with a balancing weight. The TNC provides the **MEASURE UNBALANCE** cycle for this purpose.

The **MEASURE UNBALANCE** cycle determines the unbalance of the workpiece and calculates the mass and position of a balancing mass.

To determine unbalance:

▷
- Shift the soft-key row in the Manual Operation mode

MANUAL CYCLES
- Select the **MANUAL CYCLES** soft key

TURNING
- Select the **TURNING** soft key

UBALANSE MÅLE
- Select the **MEASURE UNBALANCE** soft key
- Enter the speed for unbalance detection
- Press the NC Start button: The cycle starts rotating the table at a low speed and gradually increases the speed up to the defined value. The TNC displays a window that shows the calculated mass and radial position of the balancing weight.

If you wish to use a different radial position or mass for the balancing weight, you can overwrite one value and have the other value recalculated automatically.

> Repeat the unbalance measurement after you have clamped a balancing weight.
>
> In some cases, you may need to place two or more balancing weights at different positions in order to compensate unbalance.

14.4 Tools in turning mode (option 50)

Tool call

Just as in Milling mode, turning tools are called with the **T** function. You merely have to enter the tool number or tool name in the **T** block.

> You can call and insert a turning tool both in Milling mode and in Turning mode.

Tool selection in the pop-up window

If you open a pop-up window for tool selection, the TNC marks all tools available in the tool magazine green.

In addition to the tool number and tool name, the control also shows the **ZL** and **XL** columns from the turning tool table.

NC syntax

N40 FUNCTION MODE TURN	Turning mode selection
N50 T301	Tool call

Tool compensation in the program

With **FUNCTION TURNDATA CORR** you can define additional compensation values for the active tool. In the **TURNDATA CORR FUNCTION** you can enter delta values for tool lengths in the X direction **DXL** and in the Z direction **DZL**. The compensation values have an additive effect on the compensation values from the turning tool table.

FUNCTION TURNDATA CORR is always effective for the active tool. A renewed **T** deactivates compensation again. When you exit the program (e.g. PGM MGT), the TNC automatically resets the compensation values.

When you enter the **TURNDATA CORR FUNCTION** you can specify the effect of the tool compensation with a soft key:

- **FUNCTION TURNDATA CORR-TCS**: The tool compensation is effective in the tool coordinate system
- **FUNCTION TURNDATA CORR-WPL**: The tool compensation is effective in the workpiece coordinate system

> Tool compensation **FUNCTION TURNDATA CORR-TCS** is always effective in the tool coordinate system, even during inclined machining.

Define the tool compensation:

SPEC FCT
- Show the soft-key row with special functions

TURNING PROGRAM FUNCTIONS
- Select the menu for **TURNING PROGRAM FUNCTIONS**

FUNCTION TURNDATA
- Select **FUNCTION TURNDATA**

TURNDATA CORR
- Select **TURNDATA CORR**

NC syntax

```
21 FUNCTION TURNDATA CORR-TCS:Z/X DZL:0.1 DXL:0.05
...
```

Tool data

You define turning-specific tool data in the turning tool table **TOOLTURN.TRN**.

The tool number saved in the **T** column refers to the number of the turning tool in TOOL.T. Geometry values such as **L** and **R** from TOOL.T are not effective with turning tools.

In addition you must identify turning tools in the tool table TOOL.T as turning tools. For this, in column TYP select the tool type **TURN** for the appropriate tool. If you require additional geometric data for a tool you can create further indexed tools for this.

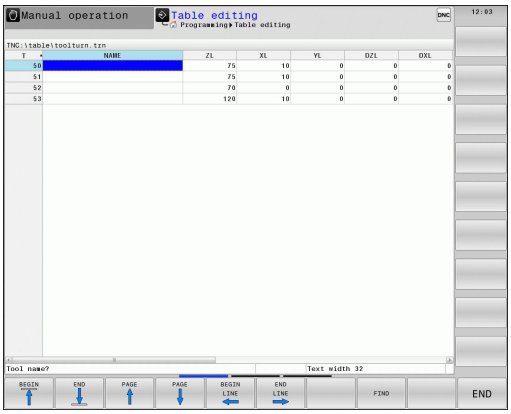

> The tool number in TOOLTURN.TRN must match the tool number of the turning tool in TOOL.T. If you enter or copy a new line you can then enter the corresponding number.
>
> Below the table window the TNC displays dialog text, unit specification and entry area for the specific input field

You should give other tool tables that are to be archived or used for test runs different file names of your choice with the extension **.TRN**.

Tool data in the turning tool table

Input parameters	Application	Input
T	Tool number: Must match the tool number of the turning tool in TOOL.T	-
NAME	Tool name: The TNC automatically takes on the tool name if you select the turning tool table in the tool table	**Input range: 32 characters max., only capital letters, no space characters**
ZL	Compensation value for tool length 1 (Z direction)	**-99999.9999...+99999.9999**
XL	Compensation value for tool length 2 (X direction)	**-99999.9999...+99999.9999**
YL	Compensation value for tool length 3 (Y direction)	**-99999.9999...+99999.9999**
DZL	Delta value for tool length 1 (Z direction), additive effect on ZL	**-99999.9999...+99999.9999**
DXL	Delta value for tool length 2 (X direction), additive effect on XL	**-99999.9999...+99999.9999**
DYL	Delta value for tool length 3 (Y direction), additive effect on YL	**-99999.9999...+99999.9999**
RS	Tool tip radius: The TNC considers the tool tip radius in turning cycles and implements tool tip radius compensation when contours with radius compensation **RL** or **RR** were programmed	**-99999.9999...+99999.9999**
TO	Tool orientation: Direction of tool tip	**1 to 9**
ANGLE OF ORIENTATION (ORI)	Spindle orientation angle: Angle of the milling spindle for aligning the turning tool to the machining position	**-360.0...+360.0**
T-ANGLE	Setting angle for roughing and finishing tools	**0.0000...+179.9999**

Input parameters	Application	Input
P-ANGLE	Point angle for roughing and finishing tools	**0.0000...+179.9999**
CUTLENGTH	Cutting length of recessing tool	**0.0000...+99999.9999**
CUTWIDTH	Width of recessing tool	**0.0000...+99999.9999**
TYPE	Type of turning tool: Roughing tool **ROUGH**, finishing tool **FINISH**, thread tool **THREAD**, recessing tool **RECESS**, button tool **BUTTON**, groove turning tool **RECTURN**	**ROUGH**, **FINISH**, **THREAD**, **RECESS**, **BUTTON**, **RECTURN**

The control can describe the **DXL** and **DZL** columns using touch probe cycles.

Further information: Cycle Programing User's Manual

With the spindle orientation angle **ORI** you define the angle position of the milling spindle for the turning tool. Orient the tool tip depending on the tool orientation **TO** to the rotary table center or in the opposite direction.

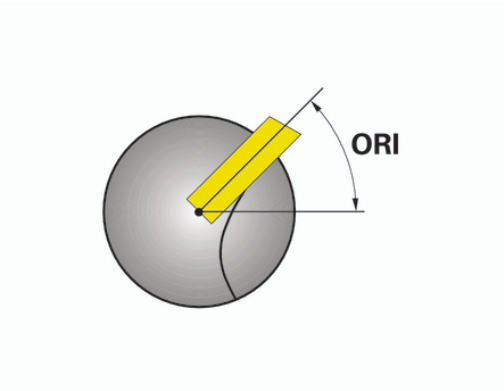

The tool must be clamped and measured in the correct position.

Check the tool orientation after definition of a tool.

Tool data for turning tool

Input parameters	Application	Input
ZL	Tool length 1	Required
XL	Tool length 2	Required
XL	Tool length 3	Optional
DZL	Wear compensation **ZL**	Optional
DXL	Wear compensation **XL**	Optional
DYL	Wear compensation **YL**	Optional
RS	Cutting radius	Required
TO	Tool orientation	Required
ORI	Orientation angle	Required
T-ANGLE	Tool angle	Required
P-ANGLE	Point angle	Required
TYPE	Tool type	Required

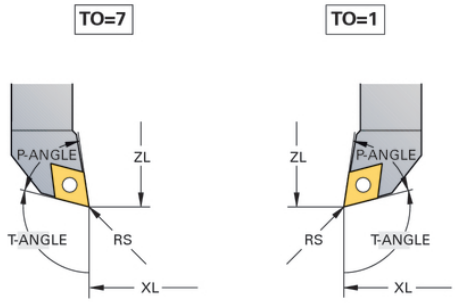

Tool data for recessing tools

Input parameters	Application	Input
ZL	Tool length 1	Required
XL	Tool length 2	Required
YL	Tool length 3	Optional
DZL	Wear compensation **ZL**	Optional
DXL	Wear compensation **XL**	Optional
DYL	Wear compensation **YL**	Optional
RS	Cutting radius	Required
TO	Tool orientation	Required
ORI	Orientation angle	Required
CUTWIDTH	Width of recessing tool	Required
TYPE	Tool type	Required

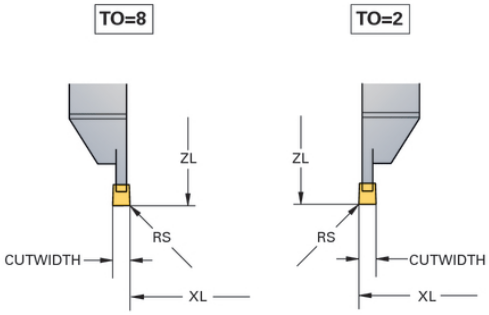

Tool data for groove turning tools

Input parameters	Application	Input
ZL	Tool length 1	Required
XL	Tool length 2	Required
YL	Tool length 3	Optional
DZL	Wear compensation **ZL**	Optional
DXL	Wear compensation **XL**	Optional
DYL	Wear compensation **YL**	Optional
RS	Cutting radius	Required
TO	Tool orientation	Required
ORI	Orientation angle	Required
CUTLENGTH	Cutting length of recessing tool	Required
CUTWIDTH	Width of recessing tool	Required
TYPE	Tool type	Required

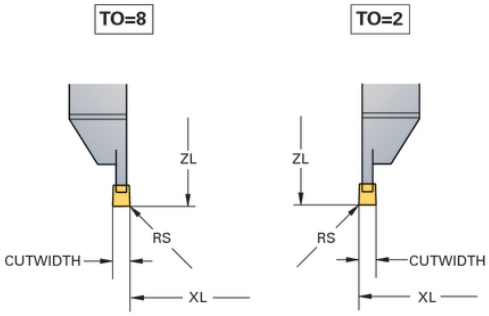

Tool data for button tools

Input parameters	Application	Input
ZL	Tool length 1	Required
XL	Tool length 2	Required
YL	Tool length 3	Optional
DZL	Wear compensation **ZL**	Optional
DXL	Wear compensation **XL**	Optional
DYL	Wear compensation **YL**	Optional
RS	Cutting radius	Required
TO	Tool orientation	Required
ORI	Orientation angle	Required
T-ANGLE	Tool angle	Required
P-ANGLE	Point angle	Required
TYPE	Tool type	Required

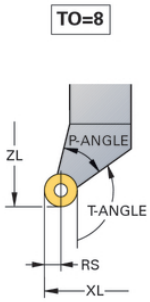

Tool data for threading tools

Input parameters	Application	Input
ZL	Tool length 1	Required
XL	Tool length 2	Required
YL	Tool length 3	Optional
DZL	Wear compensation **ZL**	Optional
DXL	Wear compensation **XL**	Optional
DYL	Wear compensation **YL**	Optional
TO	Tool orientation	Required
ORI	Orientation angle	Required
T-ANGLE	Tool angle	Required
P-ANGLE	Point angle	Required
TYPE	Tool type	Required

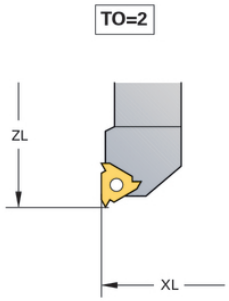

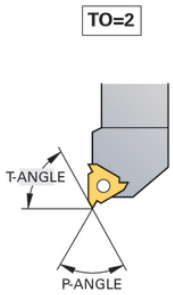

Tool tip radius compensation TRC

Turning tools have a radius at the tool tip **(RS).** As a result, when machining tapers, chamfers and radii, this results in inaccuracies on the contour because programmed traverse paths are referenced to the theoretical tool tip S. TRC prevents the resulting deviations.

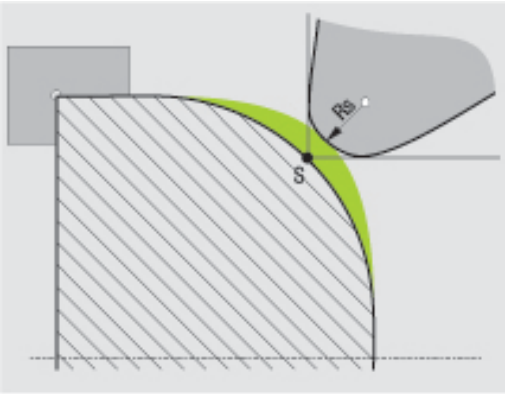

In the turning cycles the TNC automatically carries out tool radius compensation. In specific traversing blocks and within programmed contours, activate TRC with **G41** or **G42.**

In turning cycles the TNC checks the cutting geometry with the tip angle **P-ANGLE** and the setting angle **T-ANGLE.** Contour elements in the cycle are processed by the TNC only as far as this is possible with the specific tool. The TNC outputs a warning when residual material is left behind.

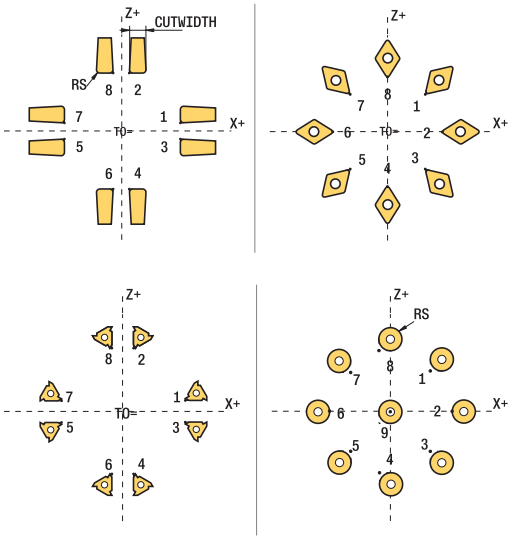

When the position of the cutting edge is neutral (**TO=2;4;6;8**), the direction of the radius compensation is ambiguous. In this case, TRC is only possible within cycles.

The TNC can also run tool tip radius compensation during inclined processing. The following limitation applies here: if you activate inclined processing with M128 then tool tip radius compensation without a cycle, i.e. in traversing blocks with **G41**/**G42**, is not possible. If you activate inclined processing with **M144** this limitation does not apply.

14.5 Turning program functions (option 50)

Recessing and undercutting

Some cycles machine contours that you have written in a subprogram. You program these contours with path functions or FK functions. Further special contour elements are available to you for writing turning contours. In this way you can program complete recessing and undercutting as complete contour elements with a single NC block.

> Recessing and undercutting always reference a previously defined linear contour element.
>
> You can only use the recess and undercut elements GRV and UDC in contour subprograms that have been called by a turning cycle.
>
> **Further information:** Cycle Programming User's manual

You have various input possibilities when defining recessing and undercutting. Some of these inputs are mandatory, and others you can leave out (optional). The mandatory inputs are symbolized as such in the help graphics. In some elements you can select between two different definitions. The TNC has soft keys with the corresponding selection possibilities.

Programming recessing and undercutting:

SPEC FCT

- Show the soft-key row with special functions

TURNING PROGRAM FUNCTIONS

- Select the menu for **TURNING PROGRAM FUNCTIONS**

RECESS/ UNDERCUT

- Select **RECESS/ UNDERCUT**

GRV

- Select **GRV** (recess) or **UDC** (undercut)

Programming recessing

Recessing is the machining of recesses in round components, usually for accommodation of locking rings and seals or as lubricating grooves. You can program recessing around the circumference or on the face end of the turned part. For this you have two separate contour elements:

- **GRV RADIAL**: Recess in circumference of component
- **GRV AXIAL**: Recess on face end of component

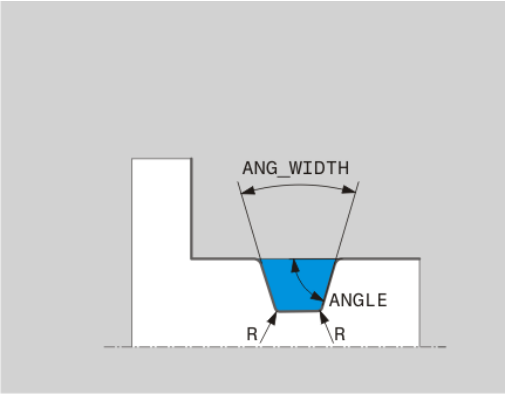

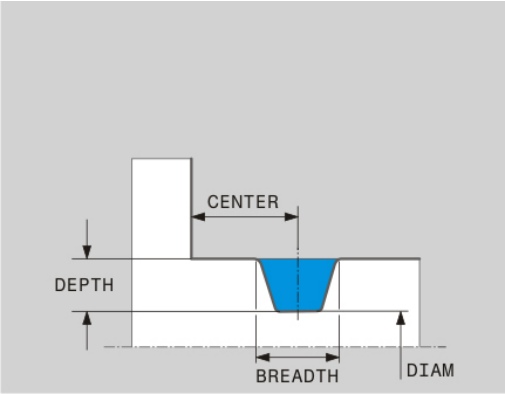

Input parameters in recessing GRV

Input parameters	Application	Input
CENTER	Center of recess	Required
R	Corner radius of both inner corners	Optional
DEPTH / **DIAM**	Recess depth (pay attention to the sign!) / diameter of recess base	Required
BREADTH	Recess width	Required
ANGLE / **ANG_WIDTH**	Edge angle / aperture angle of both edges	Optional
RND / **CHF**	Curve / chamfer corner of contour near to starting point	Optional
FAR_RND / **FAR_CHF**	Curve / chamfer corner of contour away from starting point	Optional

The algebraic sign for the recess depth specifies the machining position of the recess (inside/outside machining).

Algebraic sign of recess depth for outside machining:

- Use a negative sign when the contour element runs in a negative direction to the Z coordinate
- Use a positive sign when the contour element runs in a positive direction to the Z coordinate

Algebraic sign of recess depth for inside machining:

- Use a positive sign when the contour element runs in a negative direction to the Z coordinate
- Use a negative sign when the contour element runs in a positive direction to the Z coordinate

Radial recess: depth=5, width=10, Pos.= Z-15

```
N30 G01 X+40 Z+0
N40 G01 Z-30
N50 GRV RADIAL CENTER-15 DEPTH-5 BREADTH10 CHF1 FAR_CHF1
N60 G01 X+60
```

Programming undercutting

Undercutting is usually required for the flush connection of counterparts. In addition undercutting can help to reduce the notch effect at corners. Threads and fits are often machined with an undercut. You have various contour elements for defining the different undercuts:

- **UDC TYPE_E**: Undercut for cylindrical surface to be further processed in compliance with DIN 509
- **UDC TYPE_F**: Undercut for plan and cylindrical surface for further processing in compliance with DIN 509
- **UDC TYPE_H**: Undercut for more rounded transition in compliance with DIN 509
- **UDC TYPE_K**: Undercut in face and cylindrical surface
- **UDC TYPE_U**: Undercut in cylindrical surface
- **UDC THREAD**: Thread undercut in compliance with DIN 76

The TNC always interprets undercuts as form elements in the longitudinal direction. No undercuts are possible in the plane direction.

Undercut DIN 509 UDC TYPE _E

Input parameters in undercut DIN 509 UDC TYPE_E

Input parameters	Application	Input
R	Corner radius of both inner corners	Optional
DEPTH	Undercut depth	Optional
BREADTH	Width of undercut	Optional
ANGLE	Undercut angle	Optional

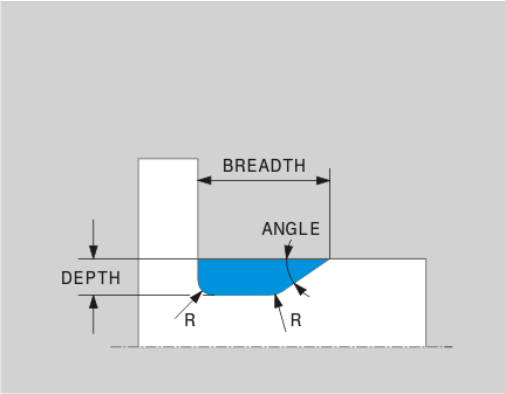

Radial recess: depth=5, width=10, Pos.= Z-15

```
N30 G01 X+40 Z+0
N40 G01 Z-30
N50 UDC TYPE_E R1 DEPTH2 BREADTH15
N60 G01 X+60
```

Undercut DIN 509 UDC TYPE_F

Input parameters in undercut DIN 509 UDC TYPE_F

Input parameters	Application	Input
R	Corner radius of both inner corners	Optional
DEPTH	Undercut depth	Optional
BREADTH	Width of undercut	Optional
ANGLE	Undercut angle	Optional
FACEDEPTH	Depth of face	Optional
FACEANGLE	Contour angle of face	Optional

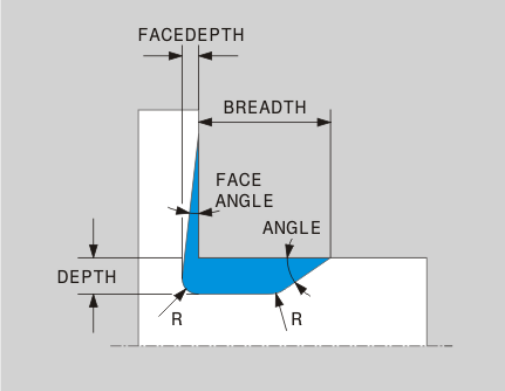

Undercut form F: depth = 2, width = 15, depth of face = 1

```
N30 G01 X+40 Z+0
N40 G01 Z-30
N50 UDC TYPE_F R1 DEPTH2 BREADTH15 FACEDEPTH1
N60 L X+60
```

Undercut DIN 509 UDC TYPE_H

Input parameters in undercut DIN 509 UDC TYPE_H

Input parameters	Application	Input
R	Corner radius of both inner corners	Required
BREADTH	Width of undercut	Required
ANGLE	Undercut angle	Required

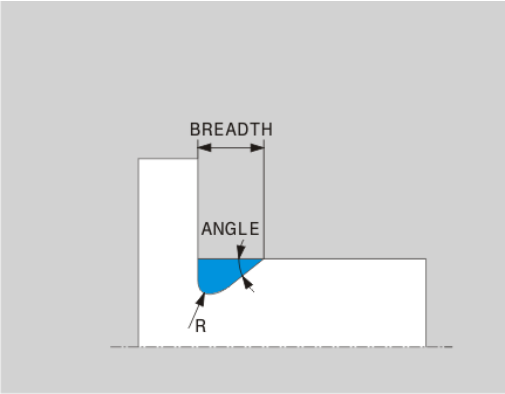

Undercut form F: depth = 2, width = 15, depth of face = 1

```
N30 G01 X+40 Z+0
N40 G01 Z-30
N50 UDC TYPE_H R1 BREADTH10 ANGLE10
N60 L X+60
```

Undercut UDC TYPE_K

Input parameters in undercut UDC TYPE_K

Input parameters	Application	Input
R	Corner radius of both inner corners	Required
DEPTH	Undercut depth (paraxial)	Required
ROT	Angle to longitudinal axis (default: 45°)	Optional
ANG_WIDTH	Opening angle of undercut	Required

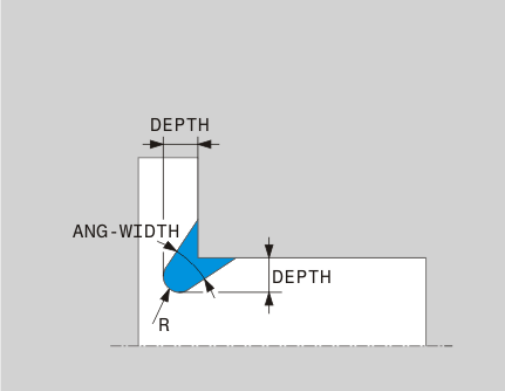

Undercut form F: depth = 2, width = 15, depth of face = 1

```
N30 G01 X+40 Z+0
N40 G01 Z-30
N50 UDC TYPE_K R1 DEPTH3 ANG_WIDTH30
N60 L X+60
```

Undercut UDC TYPE_U

Input parameters in undercut UDC TYPE_U

Input parameters	Application	Input
R	Corner radius of both inner corners	Required
DEPTH	Undercut depth	Required
BREADTH	Width of undercut	Required
RND / CHF	Curve / chamfer of outer corner	Required

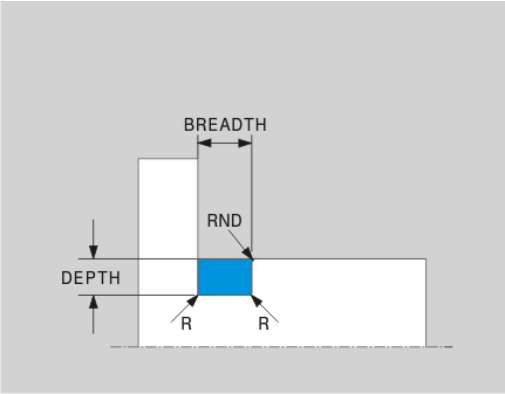

Undercut form U: depth = 3, width = 8

```
N30 G01 X+40 Z+0
N40 G01 Z-30
N50 UDC TYPE_U R1 DEPTH3 BREADTH8 RND1
N60 L X+60
```

Undercut UDC THREAD

Input parameters in undercut DIN 76 UDC THREAD

Input parameters	Application	Input
PITCH	Thread pitch	Optional
R	Corner radius of both inner corners	Optional
DEPTH	Undercut depth	Optional
BREADTH	Width of undercut	Optional
ANGLE	Undercut angle	Optional

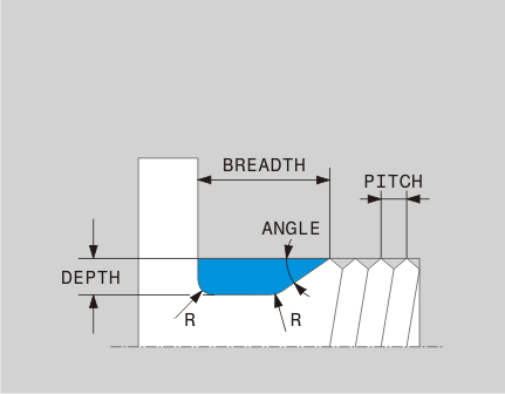

Undercut form U: depth = 3, width = 8

```
N30 G01 X+40 Z+0
N40 G01 Z-30
N50 UDC THREAD PITCH2
N60 L X+60
```

Blank form update TURNDATA BLANK

The **TURNDATA BLANK** function enables you to use the blank form update feature. The control detects the described contour and only then machines the residual material.

With **TURNDATA BLANK** you call a contour description used by the TNC as an updated workpiece blank.

Define the function TURNDATA BLANK as follows:

SPEC FCT
- Show the soft-key row with special functions

TURNING PROGRAM FUNCTIONS
- Select the menu for **TURNING PROGRAM FUNCTIONS**

FUNCTION TURNDATA
- Select **FUNCTION TURNDATA**

TURNDATA BLANK
- Select **TURNDATA BLANK**
- Press the soft key for the desired contour call

You can call the contour description in the following ways:

Soft key	Call
BLANK <FILE>	Contour description in an external program Call via file name
BLANK <FILE>=QS	Contour description in an external program Call via string parameter
BLANK LBL NR	Contour description in a subprogram Call via label number
BLANK LBL NAME	Contour description in a subprogram Call via label name
BLANK LBL QS	Contour description in a subprogram Call via string parameter

Deactivate blank form update

Deactivate blank form update as follows:

SPEC FCT
- Show the soft-key row with special functions

TURNING PROGRAM FUNCTIONS
- Select the menu for **TURNING PROGRAM FUNCTIONS**

FUNCTION TURNDATA
- Select **FUNCTION TURNDATA**

TURNDATA BLANK
- Select **TURNDATA BLANK**

BLANK OFF
- Select **BLANK OFF**

Inclined turning

It may sometimes be necessary for you to bring the swivel axes into a specific position to machine a specific process. This can be necessary for example when you can only machine contour elements according to a specific position due to tool geometry.

Inclining a swivel axis creates an offset from tool to tool. The function **M144** considers the position of the inclined axes and compensates this offset. In addition the function **M144** aligns the Z direction of the workpiece coordinate system to the direction of the centerline of the workpiece. If an inclined axis is a tilting table, so that the workpiece is sloping, the TNC runs traverse movements in the displaced workpiece coordinate system. If the inclined axis is a swivel head (tool is sloping) the workpiece coordinate system is not displaced.

After inclining the swivel axis you may have to again pre-position the tool in the Y coordinates and orient the position of the tool tip with the cycle 800.

Alternatively to function **M144** you can also use function **M128**. The effect is identical, but the following limitation applies: The TNC can also run tool tip radius compensation during inclined processing. If you activate inclined processing with M128 then tool tip radius compensation without a cycle, i.e. in traversing blocks with **G41**/**G42**, is not possible. If you activate inclined processing with **M144** this limitation does not apply.

If the turning cycles are executed with **M144**, the angles of the tool to the contour change. The TNC automatically takes these modifications into account and thus also monitors the machining in inclined state.

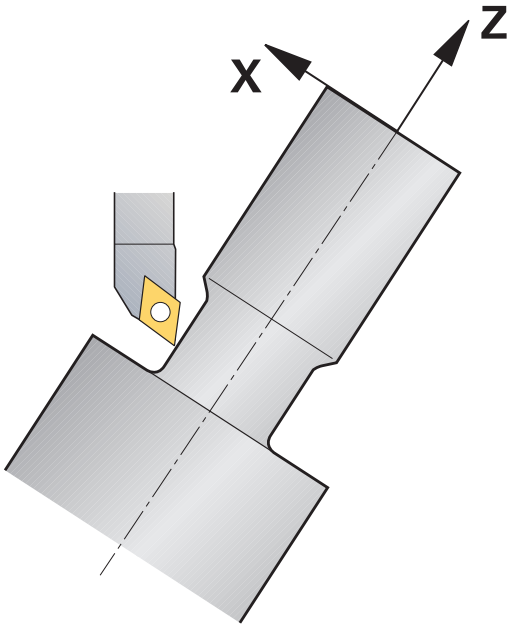

> You can use recessing cycles and thread cycles with inclined machining only with a rectangular tool angle (+90°, -90°).
>
> Tool compensation **FUNCTION TURNDATA CORR-TCS** is always effective in the tool coordinate system, even during inclined machining.

...	
N10 M144	Activate inclined machining
N20 G00 A-25 G40	Position swivel axis
N30 800 ADJUST XZ SYSTEM	Workpiece coordinate system and align tool
Q497=+90 ;PRECESSION ANGLE	
Q498=+0 ;REVERSE TOOL	
Q530=+2 ;INCLINED MACHINING	
Q531=-25 ;ANGLE OF INCIDENCE?	
Q532=750 ;FEED RATE	
Q533=+1 ;PREFERRED DIRECTION	
Q535=3 ;ECCENTRIC TURNING	
Q536=0 ;ECCENTRIC W/O STOP	
N40 G00 X+165 Y+0 G40	Pre-positioning the tool
N50 G00 Z+2 G40	Tool at starting position
...	Machining with inclined axis

15

Manual Operation and Setup

15.1 Switch-on, switch-off

Switch-on

Switch-on and crossing over the reference points can vary depending on the machine tool.

Refer to your machine manual.

Switch on the power supply for TNC and machine. The TNC then displays the following dialog:

SYSTEM STARTUP

- TNC is started

POWER INTERRUPTED

CE

- TNC message that the power was interrupted—clear the message

COMPILE A PLC PROGRAM

- The PLC program of the TNC is automatically compiled

RELAY EXT. DC VOLTAGE MISSING

I

- Switch on external dc voltage. The TNC checks the functioning of the EMERGENCY STOP circuit

MANUAL OPERATION
TRAVERSE REFERENCE POINTS

- Cross the datums manually in the prescribed sequence: For each axis press the **NC START**; or
- Cross the datums in any sequence: Press and hold the machine axis direction button for each axis until the datum has been traversed

X+

Y+

If your machine is equipped with absolute encoders, you can leave out crossing the reference marks. In such a case, the TNC is ready for operation immediately after the machine control voltage is switched on.

The TNC is now ready for operation in the **Manual Operation** mode.

The reference points need only be crossed if the machine axes are to be moved. If you intend only to write, edit or test programs, you can select the **Programming** or **Test Run** mode of operation immediately after switching on the control voltage.

You can cross the reference points later by pressing the **PASS OVER REFERENCE** soft key in the **MANUAL OPERATION** mode.

Crossing the reference point in a tilted working plane

Danger of collision!

Make sure that the angle values entered in the menu for tilting the working plane match the actual angles of the tilted axis.

Deactivate the "Tilt Working Plane" function before you cross the reference points. Take care that there is no collision. Retract the tool from the current position first, if necessary.

If this function was active when the control was turned on, then the TNC automatically activates the tilted working plane. Then the TNC moves the axes in the tilted coordinate system when an axis-direction key is pressed. Position the tool in such a way that a collision is excluded during the subsequent crossing of the datums. To cross the datums you have to deactivate the **Tilt working plane** function.

Further Information: Activating manual tilting:, page 550

If you use this function, then for non-absolute encoders you must confirm the positions of the rotary axes, which the TNC displays in a pop-up window. The position displayed is the last active position of the rotary axes before switch-off.

If one of the two functions that were active before is active now, the **NC START** key has no function. The TNC outputs a corresponding error message.

Switch-off

Deactivation is a machine-dependent function.
Refer to your machine manual.

To prevent data from being lost on switch-off, you need to shut down the operating system of the TNC as follows:

- Select the **Manual operation** mode

- Select the function for shutting down

- Confirm with the **SHUT DOWN** soft key
- When the TNC displays the message **Now you can switch off the TNC** in a pop-up window, you may switch off the power supply to the TNC

Caution: Data may be lost!
Inappropriate switch-off of the TNC can lead to data loss!
The control restarts after pressing the **RESTART** soft key. Switch-off during a restart can also result in data loss!

15.2 Moving the machine axes

Note

Refer to your machine manual.

Moving with the axis direction keys can vary depending on the machine.

Moving the axis with the axis direction keys

- Select the **MANUAL OPERATION** mode
- Press the axis direction key and hold it down as long as you wish the axis to move; or
- To move the axis continuously: Press and hold the axis direction button and press the **NC START** key
- To stop: Press the **NC Stop** key

You can move several axes at a time with these two methods. The control then shows the feed rate. You can change the feed rate at which the axes are moved with the **F** soft key.

Further Information: Spindle speed S, feed rate F and miscellaneous function M, page 504

If a moving task is active on the machine, the control displays the **control in operation** symbol.

Incremental jog positioning

With incremental jog positioning you can move a machine axis by a preset distance.

- Select the **MANUAL OPERATION** or **ELECTRONIC HANDWHEEL** operating mode
- Shift the soft-key row
- Select incremental jog positioning: Switch the **INCREMENT** soft key to **ON**

JOG INCREMENT =

- Enter the jog increment in mm, and confirm with the **ENT** key
- Press the axis direction key to position as often as desired

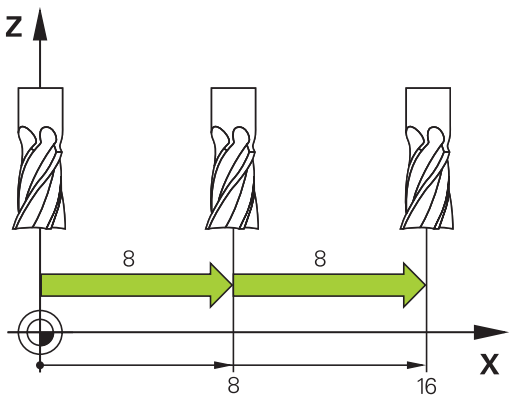

The maximum permissible value for infeed is 10 mm.

Traverse with electronic handwheels

The TNC supports traversing with the following new electronic handwheels:

- HR 520: Handwheel compatible for connection to HR 420 with display, data transfer per cable
- HR 550 FS: Handwheel with display, radio data transmission

In addition to this, the TNC continues to support the cable handwheels HR 410 (without display) and HR 420 (with display).

Caution: Danger to the operator and handwheel!

All of the handwheel connectors may only be removed by authorized service personnel, even if it is possible without any tools!

Ensure that the handwheel is plugged in before you switch on the machine!

If you wish to operate your machine without the handwheel, disconnect the cable from the machine and secure the open socket with a cap!

Your machine tool builder can make additional functions of the HR 5xx available. Refer to your machine manual.

If you want to use the handwheel superimposing function on a virtual axis, then we recommend the handwheel HR 5xx.

Further Information: Virtual tool axis VT, page 370

The portable HR 5xx handwheels feature a display on which the TNC shows information. In addition, you can use the handwheel soft keys for important setup functions, e.g. datum setting or entering and running M functions.

As soon as you have activated the handwheel with the handwheel activation key, the operating panel is locked. This is indicated by a pop-up window on the TNC screen.

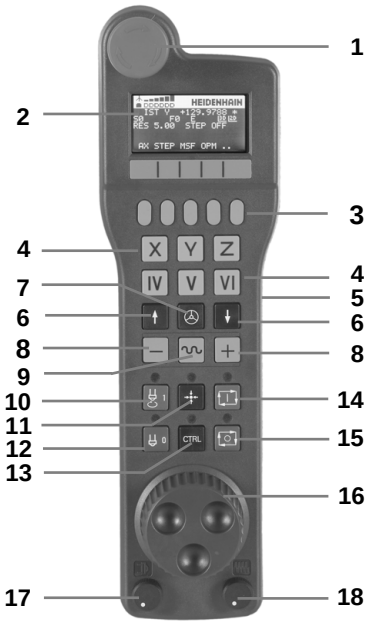

1 **EMERGENCY STOP** key
2 Handwheel display for status and for selecting functions
3 Soft keys
4 Axis selection keys; can be exchanged by the machine manufacturer depending on the axis configuration
5 Permissive key
6 Arrow keys for defining handwheel sensitivity
7 Handwheel activation key
8 Key for TNC traverse direction of the selected axis
9 Rapid traverse superimposing for the axis direction key
10 Spindle switch-on (machine-dependent function, key can be exchanged by the machine manufacturer)
11 "Generate NC block" key (machine-dependent function, key can be exchanged by the machine manufacturer)
12 Spindle switch-off (machine-dependent function, key can be exchanged by the machine manufacturer)
13 **CTRL** key for special functions (machine-specific function, key can be exchanged by the machine manufacturer)
14 **NC START** (machine-dependent function, key can be exchanged by the machine manufacturer)
15 **NC STOP** (machine-dependent function, key can be exchanged by the machine manufacturer)
16 Handwheel
17 Spindle speed potentiometer
18 Feed rate potentiometer
19 Cable connection, not available with the HR 550 FS wireless handwheel

Handwheel display

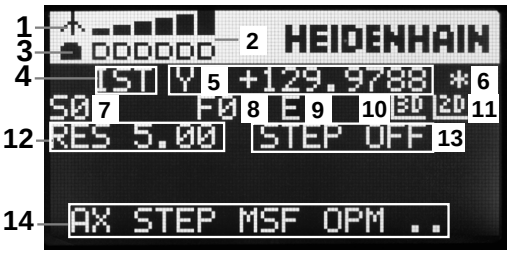

1 **Only with wireless handwheel HR 550 FS**: Shows whether the handwheel is in the docking station or whether wireless operation is active
2 **Only with wireless handwheel HR 550 FS:** Shows the field strength, six bars = maximum field strength
3 **Only with wireless handwheel HR 550 FS:** Shows the charge status of the rechargeable battery, six bars = fully charged A bar moves from the left to the right during recharging
4 **ACTL**: Type of position display
5 **Y+129.9788**: Position of the selected axis
6 *****: STIB (control in operation); program run has been started or axis is in motion
7 **S0:** Current spindle speed
8 **F0:** Feed rate at which the selected axis is moving
9 **E**: Error message
10 **3D**: Tilted-working-plane function is active
11 **2D**: Basic rotation function is active
12 **RES 5.0**: Active handwheel resolution. Distance in mm/rev (°/rev for rotary axes) that the selected axis moves for one handwheel revolution
13 **STEP ON** or **OFF**: Incremental jog active or inactive. If a function is active, the TNC additionally displays the active jog increment.
14 Soft-key row: Selection of various functions, described in the following sections

Special features of the HR 550 FS wireless handwheel

Due to various potential sources of interference, a wireless connection is not as reliable as a cable connection. Before you use the wireless handwheel it must therefore be checked whether there are any other radio users in the surroundings of the machine. This inspection for presence of radio frequencies or channels is recommended for all industrial radio systems.

When the HR550 is not needed, always put it in the handwheel holder. This way you can ensure that the handwheel batteries are always ready for use thanks to the contact strip on the rear side of the wireless handwheel and the recharge control, and that there is a direct contact connection for the emergency stop circuit.

If an error (interruption of the radio connection, poor reception quality, defective handwheel component) occurs, the handwheel always reacts with an emergency stop.

Please read the notes on configuring the HR 550 FS wireless handwheel.

Further Information: Configure HR 550 FS wireless handwheel, page 624

Caution: Danger to the operator and machine!

Due to safety reasons you must switch off the wireless handwheel and the handwheel holder after an operating time of 120 hours at the latest so that the TNC can run a functional test when it is restarted!

If you use several machines with wireless handwheels in your workshop you have to mark the handwheels and holders that belong together so that their respective associations are clearly identifiable (e.g. by color stickers or numbers). The markings on the wireless handwheel and the handwheel holder must be clearly visible to the user!

Before every use, make sure that the correct handwheel for your machine is active.

The HR 550 FS wireless handwheel features a rechargeable battery. The battery starts charging when you put the handwheel in the holder.

You can operate the HR 550 FS for up to 8 hours with the battery before it must be recharged again. We recommend putting the handwheel in the holder when it is not in use.

As soon as the handwheel is in its holder, it switches internally to cable operation. This means you can still use it even if the handwheel is fully discharged. The functions are the same as with wireless operation.

When the handwheel is completely discharged, it takes about 3 hours until it is fully recharged in the handwheel holder.

Clean the contacts **1** of the handwheel holder and handwheel regularly to ensure their proper functioning.

The transmission range is amply dimensioned. If you should nevertheless happen to come near the edge of the transmission area, for example, which is possible with very large machines, the HR 550 FS warns you in time with a clearly noticeable vibration alarm. If this happens you must reduce the distance to the handwheel holder in which the radio receiver is integrated.

Caution: Danger to the workpiece and tool!

If interruption-free operation is no longer possible within the transmission range the TNC automatically triggers an emergency stop. This can also happen during machining. Keep the distance to the handwheel holder to a minimum. When you are not using the handwheel, place it in the holder.

If the TNC has triggered an emergency stop you must reactivate the handwheel. Proceed as follows:

- Select the **Programming** mode
- Press the **MOD** key to select the MOD function
- Scroll through the soft-key row

- Select the configuration menu for the wireless handwheel: Press the **SET UP WIRELESS HANDWHEEL** soft key
- Click the **Start handwheel** button to reactivate the wireless handwheel
- To save the configuration and exit the configuration menu, press the **END** button

The **MOD** operating mode includes a function for commissioning and configuring the handwheel.

Further Information: Configure HR 550 FS wireless handwheel, page 624

Selecting the axis to be moved

You can activate the principal axes X, Y, Z and three other axes defined by the machine manufacturer directly through the axis address keys. Your machine manufacturer can also place the virtual axis VT directly on one of the free axis keys. If the virtual axis VT is not on one of the axis address keys, proceed as follows:

- Press the **F1** (**AX**) handwheel soft key: The TNC displays all active axes on the handwheel display The currently active axis flashes
- Select the desired axis with the handwheel soft keys **F1** (**->**) or **F2** (**<-**) and confirm with the **F3** (**OK**) handwheel soft key

The machine manufacturer can also configure the turning spindle (option number 50) as an optional axis.

Refer to your machine manual.

Setting the handwheel sensitivity

The handwheel sensitivity determines which path an axis takes per revolution of the handwheel. The sensitivity levels are predefined and are selectable with the handwheel arrow keys (only when incremental jog is not active).

Selectable sensitivity levels: 0.01/0.02/0.05/0.1/0.2/0.5/1/2/5/10/20 [mm/revolution or degrees/revolution]

Moving the axes

- Activate the handwheel: Press the handwheel key on the HR 5xx: Now you can only operate the TNC with the HR 5xx; the TNC shows a pop-up window containing information on the TNC screen
- Select the desired operating mode with the **OPM** soft key if necessary
- If required, press and hold the permissive key
- Use the handwheel to select the axis to be moved. Select the additional axes with the soft keys as required
- Move the active axis in the positive direction; or
- Move the active axis in the negative direction
- Deactivate the handwheel: Press the handwheel key on the HR 5xx: Now you can operate the TNC again via the operating panel

Potentiometer settings

The potentiometers of the machine operating panel continue to be active after you have activated the handwheel. If you want to use the potentiometers on the handwheel, proceed as follows:

- Press the **CTRL** and Handwheel keys on the HR 5xx; the TNC shows the soft key menu for selecting the potentiometers on the handwheel display
- Press the **HW** soft key to activate the handwheel potentiometers

If you have activated the potentiometers on the handwheel, you must reactivate the potentiometers of the machine operating panel before deselecting the handwheel. Proceed as follows:

- Press the **CTRL** and handwheel keys on the HR 5xx; the TNC shows the soft-key menu for selecting the potentiometers on the handwheel display
- Press the **KBD** soft key to activate the potentiometers of the machine operating panel

Incremental jog positioning

With incremental jog positioning the TNC moves the currently active handwheel axis by a preset increment defined by you:

- Press the handwheel soft key F2 (**STEP**)
- Activate incremental jog positioning: Press handwheel soft key 3 (**ON**)
- Select the desired jog increment by pressing the **F1** or **F2** key. If you press and hold the respective key, the TNC increases the counting increment by a factor of 10. By also pressing the **CTRL** key, you can increase the counting increment to 1. The smallest possible increment is 0.0001 mm. The largest possible increment is 10 mm
- Confirm the selected jog increment with soft key 4 **(OK)**
- With the **+** or **-** handwheel key, move the active handwheel axis in the corresponding direction

Inputting miscellaneous functions M

- Press the **F3** (**MSF**) handwheel soft key
- Press the **F1** (**M**) handwheel soft key
- Select the desired M function number by pressing the **F1** or **F2** key
- Execute the M miscellaneous function with the **NC START** key

Entering the spindle speed S

- Press the **F3** (**MSF**) handwheel soft key
- Press the **F2** (**S**) handwheel soft key
- Select the desired speed by pressing the **F1** or **F2** key. If you press and hold the respective key, the TNC increases the counting increment by a factor of 10. By also pressing the **CTRL** key, you can increase the counting increment to 1000
- Activate the new speed S with the **NC START** key

Entering the feed rate F

- Press the **F3** (**MSF**) handwheel soft key
- Press the **F3** (**F**) handwheel soft key
- Select the desired feed rate by pressing the **F1** or **F2** key. If you press and hold the respective key, the TNC increases the counting increment by a factor of 10. By also pressing the **CTRL** key, you can increase the counting increment to 1000
- Confirm the new feed rate F with the **F3** (**OK**) handwheel soft key

Datum setting

- Press the **F3** (**MSF**) handwheel soft key
- Press the **F4** (**PRS**) handwheel soft key
- If required, select the axis in which the datum is to be set.
- Reset the axis with the **F3** (**OK**) handwheel soft key or set the desired value with **F1** and **F2** and then confirm with **F3** (**OK**). By also pressing the **CTRL** key, you can increase the counting increment to 10

Changing modes of operation

With the handwheel soft key **F4** (**OPM**) you can use the handwheel to switch the operating mode, provided that the current status of the control allows a mode change.

- Press the **F4** (**OPM**) handwheel soft key
- Select the desired operating mode by handwheel soft key
  - MAN: Manual Operation
    MDI: Positioning with manual data input
    SGL: Program run, single block
    RUN: Program run, full sequence

Generating a complete traversing block

Your machine tool builder can assign any function to the "Generate NC block" handwheel key. Refer to your machine manual.

- Select the **Positioning with manl.data input** operating mode
- If required, use the arrow keys on the TNC keyboard to select the NC block after which the new traversing block is to be inserted.
- Activate the handwheel
- Press the "Generate NC block" handwheel key: The TNC inserts a complete traversing block containing all axis positions selected through the MOD function.

Features in the program run modes of operation

You can use the following functions in the Program Run modes of operation:

- **NC START** key (**NC START** handwheel key)
- **NC STOP** key (**NC STOP** handwheel key)
- After the **NC STOP** key has been pressed: Internal stop (**MOP** and then **STOP** handwheel soft keys)
- After the **NC STOP** key has been pressed: Move manual axis (**MOP** and then **MAN** handwheel soft keys)
- Returning to the contour after the axes were moved manually during a program interruption (**MOP** and then **REPO** handwheel soft keys). The handwheel soft keys, which function similarly to the screen soft keys, are used for operating.
  Further Information: Returning to the contour, page 592
- On/off switch for the Tilt working plane function (handwheel soft keys **MOP** and then **3D**)

15.3 Spindle speed S, feed rate F and miscellaneous function M

Application

In the **Manual Operation** and **El. Handwheel** operating modes, you can enter the spindle speed S, feed rate F and the miscellaneous functions M with soft keys.

Further Information: Enter miscellaneous functions M and STOP, page 356

The machine tool builder determines which miscellaneous functions M are available on your control and what effects they have.

Entering values

Spindle speed S, miscellaneous function M

- Select input for spindle speed: press the **S** soft key

SPINDLE SPEED S=

- Enter **1000** (spindle speed) and confirm your entry with the **NC START** key

The spindle speed with the entered speed**S** is started with a miscellaneous function **M**. Input a miscellaneous function **M** in the same way.

Feed rate F

After entering a feed rate **F**, confirm your entry with the **ENT** key.

The following is valid for feed rate F:

- If you enter F=0, then the lowest feed rate from the machine parameter **manualFeed** (no. 400304) takes effect
- If the feed rate entered exceeds the value defined in the machine parameter **maxFeed** (no. 400302) then the parameter value in the machine parameter takes effect
- F is not lost during a power interruption
- The control displays the feed rate.
  - When **3D ROT** is active the machining feed rate is shown if several axes are moved
  - If **3D ROT** is not active, the feed drive display remains empty if several axes are moved

Adjusting spindle speed and feed rate

With the override knobs you can vary the spindle speed S and feed rate F from 0% to 150% of the set value.

The feed rate potentiometer only lowers the programmed feed rate, not the feed rate calculated by the control.

> The override knob for spindle speed is only functional on machines with infinitely variable spindle drive.

Activating feed-rate limitation

> The feed-rate limit depends on the machine.
> Refer to your machine manual.

When the **F LIMITED** soft key is set to **ON**, the TNC limits the maximum permissible axis speed to the safely limited speed specified by the machine manufacturer.

- Select the **Manual operation** mode

- Scroll to the last soft-key row

- Switch on/off feed rate limit

15.4 Optional safety concept (functional safety FS)

Miscellaneous

You machine tool builder adapts the HEIDENHAIN safety concept to your machine. Refer to your machine manual.

Every machine tool operator is exposed to certain risks. Although protective devices can prevent access to dangerous points, the operator must also be able to work on the machine without this protection (e.g. protective door opened). Several guidelines and regulations to minimize these risks have been developed within the last few years.

The HEIDENHAIN safety concept integrated in the TNC controls complies with **Performance Level d** as per EN 13849-1 and SIL 2 as per IEC 61508, features safety-related modes of operation in accordance with EN 12417, and assures extensive operator protection.

The basis of the HEIDENHAIN safety concept is the dual-channel processor structure, which consists of the main computer (MC) and one or more drive controller modules (CC= control computing unit). All monitoring mechanisms are designed redundantly in the control systems. Safety-relevant system data are subject to a mutual cyclic data comparison. Safety-relevant errors always lead to safe stopping of all drives through defined stop reactions.

Defined safety functions are triggered and safe operating statuses are achieved via safety-relevant inputs and outputs (dual-channel implementation), which have an influence on the system in all operating modes.

In this chapter you will find explanations of the functions that are additionally available on a TNC with functional safety.

Explanation of terms

Safety-related operating modes

Description	Brief description
SOM_1	Safe operating mode 1: Automatic operation, production mode
SOM_2	Safe operating mode 2: Set-up mode
SOM_3	Safe operating mode 3: Manual intervention; only for qualified operators
SOM_4	Safe operating mode 4: Advanced manual intervention, process monitoring

Safety functions

Description	Brief description
SS0, SS1, SS1F, SS2	Safe stop: Safe stopping of all drives using different methods
STO	Safe torque off: Energy supply to the motor is interrupted. Provides protection against unexpected start of the drives
SOS	Safe operating stop. Provides protection against unexpected start of the drives
SLS	Safely-limited speed. Prevents the drives from exceeding the specified speed limits when the protective door is opened

Checking the axis positions

This function must be adapted to the TNC by your machine manufacturer. Refer to your machine manual.

After switch-on the TNC checks whether the position of an axis matches the position directly after switch-off. If a deviation occurs, this axis is displayed in red on the position display. Axes that are marked red can no longer be moved while the door is opened.

In such cases you must approach a test position for the axes in question. Proceed as follows:

- Select the **Manual operation** mode
- Execute the approach with **NC START** to move the axes in the sequence shown
- When the test position has been reached, the TNC asks whether the position was approached correctly: Confirm with the **OK** soft key if the TNC approached the test position correctly, and with **END** if the TNC approached the position incorrectly
- If you confirmed with **OK**, you must confirm the correctness of the test position again with the permissive key on the machine operating panel
- Repeat this procedure for all axes that you want to move to the test position

Danger of collision!
Approach the test positions in such a way that no collision between tool and the workpiece or the clamping devices can occur. If necessary, pre-position the axes manually.

The location of the test position is specified by your machine tool builder. Refer to your machine manual.

Activating feed-rate limitation

When the **F LIMITED** soft key is set to **ON**, the TNC limits the maximum permissible axis speeds to the specified, safely limited speed.

- Select the **Manual operation** mode
- Scroll to the last soft-key row
- Switch on/off feed rate limit

Additional status displays

On a control with functional safety FS, the general status display contains additional information about the current status of safety functions. The TNC shows this information as operating statuses of the status displays **T**, **S** and **F**

Status display	Brief description
STO	Energy supply to the spindle or a feed drive is interrupted.
SLS	Safely-limited speed: A safely limited speed is active.
SOS	Safe operating stop: Safe operating stop is active.
STO	Safe torque off: Energy supply to the motor is interrupted.

The TNC shows the active safety-related mode of operation with an icon in the header to the right of the operating mode text:

Button	Safety-related operating mode
	SOM_1 operating mode active
	SOM_2 mode active
	SOM_3 mode active
	SOM_4 mode active

15.5 Datum management with the preset table

Note

You should definitely use the preset table if:

- Your machine is equipped with rotary axes (tilting table or swivel head) and you work with the function for tilting the working plane
- Your machine is equipped with a spindle-head changing system
- Up to now you have been working with older TNC controls with REF-based datum tables
- You wish to machine identical workpieces that are differently aligned

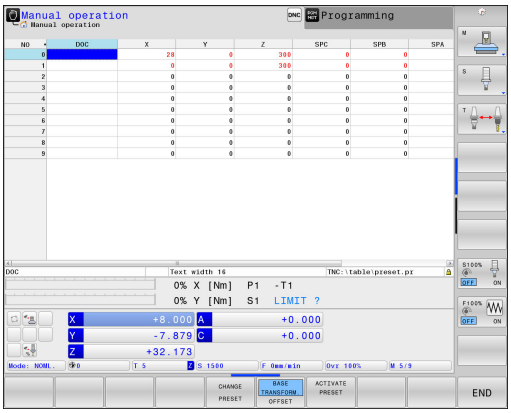

The preset table can contain any number of lines (datums). To optimize the file size and the processing speed, only use as many rows as you need to manage your datums.

For safety reasons, new lines can be inserted only at the end of the preset table.

Saving the datums in the preset table

The preset table has the name **PRESET.PR**, and is saved in the directory **TNC:\table**. **PRESET.PR** is editable in the **MANUAL OPERATION** and **ELECTRONIC HANDWHEEL** modes only if the **CHANGE PRESET** soft key was pressed. You can open the **PRESET.PR** preset table in the **PROGRAMMING** mode, but you cannot edit it.

It is permitted to copy the preset table into another directory (for data backup). Write-protected rows are also write-protected in the copied tables.

Never change the number of rows in the copied tables! If you want to reactivate the table, this may lead to problems.

To activate the preset table copied to another directory you have to copy it back to the directory **TNC:**table\.

There are several methods for saving datums and/or basic rotations in the preset table:

- Using the probing cycles in the **MANUAL OPERATION** and **EL. HANDWHEEL** modes**ELECTRONIC HANDWHEEL**
- Using probing cycles 400 to 402 and 410 to 419 in automatic mode
  Further information: Cycle Programming User's Manual
- Manual input

Basic rotations from the preset table rotate the coordinate system about the preset, which is shown in the same line as the basic rotation.

Remember to ensure that the position of the tilting axes matches the corresponding values of the 3-D ROT menu when setting the datum. Therefore:

- If the "Tilt working plane" function is not active, the position display for the rotary axes must be = 0° (zero the rotary axes if necessary).
- If the "Tilt working plane" function is active, the position displays for the rotary axes must match the angles entered in the 3-D ROT menu.

PLANE RESET does not reset the active 3-D rotation.

The line 0 in the preset table is write protected. In line 0, the TNC always saves the datum that you most recently set manually via the axis keys or via soft key. If the datum set manually is active, the TNC displays the text **PR MAN(0)** in the status display.

Manually saving the datums in the preset table

In order to save datums in the preset table, proceed as follows:

- Select the **Manual operation** mode
- Move the tool slowly until it touches (scratches) the workpiece surface, or position the measuring dial correspondingly
- Display the preset table: The TNC opens the preset table and sets the cursor to the active table row
- Select functions for entering the presets: The TNC displays the available possibilities for entry in the soft-key row. Description of input options
- Select the row in the preset table that you want to change (the row number is the preset number)
- If needed, select the column (axis) in the preset table that you want to change
- Use the soft keys to select one of the available entry possibilities

Soft key	Function
	Directly transfer the actual position of the tool (the measuring dial) as the new datum: This function only saves the preset in the axis in which the cursor is currently hovering.
ENTER NEW PRESET	Assign any value to the actual position of the tool (the measuring dial): This function only saves the preset in the axis in which the cursor is currently hovering. Enter the desired value in the pop-up window
CORRECT THE PRESET	Incrementally shift a datum already stored in the table: This function only saves the preset in the axis in which the cursor is currently hovering. Enter the desired corrective value with the correct sign in the pop-up window. If inch display is active: Enter the value in inches, and the TNC will internally convert the entered values to mm

Soft key	Function
EDIT CURRENT FIELD	Directly enter the new datum without calculation of the kinematics (axis-specific). Only use this function if your machine has a rotary table, and you want to set the datum to the center of the rotary table by entering 0. This function only saves the preset in the axis in which the cursor is currently hovering. Enter the desired value in the pop-up window. If inch display is active: Enter the value in inches, and the TNC will internally convert the entered values to mm
BASE TRANSFORM. OFFSET	Select **BASE TRANSFORM./OFFSET** view. The standard **BASE TRANSFORM.** view shows the X, Y and Z columns. Depending on the machine, the SPA, SPB and SPC columns are displayed additionally. Here, the TNC saves the basic rotation (for the Z tool axis, the TNC uses the SPC column). The **OFFSET** view shows the offset values for the preset.
SAVE PRESET	Write the currently active datum to a selectable line in the table: This function saves the datum in all axes, and then activates the appropriate row in the table automatically. If inch display is active: Enter the value in inches, and the TNC will internally convert the entered values to mm

Editing the preset table

Soft key	Editing function in table mode
BEGIN	Select the table start
END	Select the table end
PAGE	Select the previous page in the table
PAGE	Select the next page in the table
CHANGE PRESET	Select the functions for entering presets
BASE TRANSFORM. OFFSET	Display the "Basic Transformation/Axis Offset" selection
ACTIVATE PRESET	Activate the datum of the selected line of the preset table
APPEND N LINES	Add the entered number of lines to the end of the table (2nd soft-key row)
COPY FIELD	Copy the highlighted field (2nd soft-key row)
PASTE FIELD	Insert the copied field (2nd soft-key row)
RESET LINE	Reset the selected line: The TNC enters - in all columns (2nd soft-key row)
INSERT LINE	Insert a single line at the end of the table (2nd soft-key row)
DELETE LINE	Delete a single line at the end of the table (2nd soft-key row)

Overwrite protection for datum

Row 0 in the preset table is write-protected. The TNC saves the last manually set datum in row 0.

You can protect further rows in the preset table from being overwritten with the **LOCKED** column. The write-protected rows are color-highlighted in the preset table.

If you want to overwrite a write-protected row with a manual probing cycle, confirm with **OK** and enter the password (where password-protected).

> **!** **Caution: Data may be lost!**
>
> If you forget the password, then you can no longer reset the write protection in a protected row.
>
> If you protect a row with a password, please make a note of this password.
>
> Ideally, use simple protection with the **LOCK / UNLOCK** soft key.

Proceed as follows to protect a datum from overwriting:

CHANGE PRESET

- Press the **CHANGE PRESET** soft key

→

- Select the **LOCKED** column

EDIT CURRENT FIELD

- Press the **EDIT CURRENT FIELD** soft key

Protection for datum without using password:

LOCK / UNLOCK

- Press the **LOCK / UNLOCK** soft key: The TNC writes an **L** in the **LOCKED** column.

Protect a datum with a password:

LOCK / UNLOCK PASSWORD

- Press the **LOCK / UNLOCK PASSWORD** soft key
- Enter the password into the pop-up window

OK

- Confirm with the **OK** soft key or the **ENT** key: The TNC writes **###** in the **LOCKED** column.

Rescind write-protection

To edit a line you have previously write-protected, proceed as follows:

CHANGE PRESET

- Press the **CHANGE PRESET** soft key

→

- Select the **LOCKED** column

EDIT CURRENT FIELD

- Press the **EDIT CURRENT FIELD** soft key

Datum protected without password:

LOCK / UNLOCK

- Press the **LOCK / UNLOCK** soft key: The TNC cancels the write protection

Datum protected with a password:

LOCK / UNLOCK PASSWORD

- Press the **LOCK / UNLOCK PASSWORD** soft key
- Enter the password into the pop-up window

OK

- Confirm with the **OK** soft key or the **ENT** key: The TNC cancels the write protection

Activating the datum

Activating a datum from the preset table in the Manual Operation mode

> When activating a datum from the preset table, the TNC resets the active datum shift, mirroring, rotation and scaling factor.
>
> However, a coordinate transformation that was programmed in Cycle G80, Tilt working plane, or through the PLANE function, remains active.

- Select the **Manual operation** mode
- Display the preset table
- Select the datum number that you want to activate; or
- With the **GOTO** key, select the datum number that you want to activate and confirm with the **ENT** key
- Activate the datum
- Confirm activation of the datum. The TNC sets the display and—if defined—the basic rotation
- Exit the preset table

Activating a datum from the preset table in an NC program

Use Cycle G247 in order to activate datums from the preset table during a program run. In Cycle G247 you simply define the number of the datum to be activated.

Further information: Cycle Programing User's Manual

15.6 Datum setting without a 3-D touch probe

Note

When you set a datum, you set the TNC display to the coordinates of a known workpiece position.

All manual probe functions are available with a 3-D touch probe.

Further Information: Datum setting with a 3-D touch probe , page 538

Preparation

- Clamp and align the workpiece
- Insert the zero tool with known radius into the spindle
- Ensure that the TNC is showing the actual positions

Datum setting with an end mill

Protective measure

If the surface of the workpiece must not be scratched, you can lay a metal shim of known thickness d on it. You then enter a value that is greater than the desired preset by the value d.

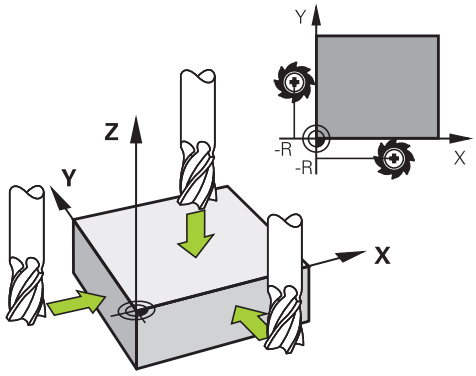

- Select the **Manual operation** mode

X+ Y+ Z–

- Move the tool slowly until it touches (scratches) the workpiece surface

Z

- Select the axis

DATUM SETTING Z=

0 ENT

- Zero tool in spindle axis: Set the display to a known workpiece position (e.g. 0) or enter the thickness d of the shim. In the tool axis, offset the tool radius

Repeat the process for the remaining axes.

If the tool in the tool axis has already been set, set the display of the tool axis to the length L of the tool or enter the sum Z=L+d.

The TNC automatically saves the datum set with the axis keys in line 0 of the preset table.

Using touch probe functions with mechanical probes or measuring dials

If you do not have an electronic 3-D touch probe on your machine, you can also use all the previously described manual touch probe functions (exception: calibration function) with mechanical probes or by simply touching the workpiece with the tool.

Further Information: Using 3-D touch probes , page 520

In place of the electronic signal generated automatically by a 3-D touch probe during probing, you can manually initiate the trigger signal for capturing the **probing position** by pressing a key.

Proceed as follows:

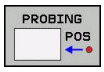

- Select any touch probe function by soft key
- Move the mechanical probe to the first position to be captured by the TNC

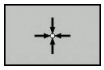

- Confirm the position: Press the **ACTUAL-POSITION CAPTURE** soft key for the TNC to save the current position
- Move the mechanical probe to the next position to be captured by the TNC

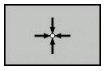

- Confirm the position: Press the **ACTUAL-POSITION CAPTURE** soft key for the TNC to save the current position
- If required, move to additional positions and capture as described previously
- **Datum**: Enter the coordinates for the new datum in the menu window and confirm with the **SET DATUM** soft key or write values to a table
  Further Information: Writing measured values from the touch probe cycles to a datum table, page 525
  Further Information: Writing measured values from the touch probe cycles to the preset table, page 526
- Terminate the probing function: Press the **END** key

15.7 Using 3-D touch probes

Overview

The following functions are available in the **Manual operation** mode:

HEIDENHAIN only warrants the function of the touch probe cycles if HEIDENHAIN touch probes are used.

The TNC must be specially prepared by the machine tool builder for the use of a 3-D touch probe. Refer to your machine manual.

Soft key	Function	Page
CALIBRATE TS	Calibrating the 3-D touch probe	527
PROBING PL	Measuring a 3-D basic rotation by probing a plane	536
PROBING ROT	Measuring a basic rotation using a line	535
PROBING POS	Setting the datum on any axis	538
PROBING P	Setting a corner as datum	539
PROBING CC	Setting a circle center as datum	540
PROBING CL	Setting the centerline as datum	543
TCH PROBE TABLE	Touch probe system data management	See Cycle Programming User's Manual

You can also use all manual touch probe cycles, except the corner probing and plane probing cycle, in Turning mode Please note that in Turning mode all measured values in the X coordinate are calculated and displayed as diameter values.

To use the touch probe in Turning mode, you must calibrate the touch probe separately in Turning mode. As the factory default setting of the rotary spindle may vary between Milling Mode and Turning mode, you must calibrate the touch probe without any center offset. You can create additional tool data for the touch probe, e.g. as an indexed tool.

For more information about the touch probe table, refer to the Cycle Programming User's Manual.

Functions in touch probe cycles

Soft keys that are used to select the probing direction or a probing routine are displayed in the manual touch probe cycles. The soft keys displayed vary depending on the respective cycle:

Soft key	Function
X+	Select the probing direction
	Capture the actual position
	Probe hole (inside circle) automatically
	Probe stud (outside circle) automatically
PROBING CC	Probe a model circle (center point of several elements)
	Select a paraxial probing direction for probing of holes, studs and model circles

Automatic probing routine for holes, studs and model circles

> **!** If you use a function for probing a circle automatically, the TNC automatically positions the touch probe to the respective touch points. Ensure that the positions can be approached without collision.

If you use a probing routine for automatically probing a hole or a stud, or a model circle, the control opens a form with the required entry fields.

Input fields in the Measure stud and Measure hole forms

Input field	Function
Stud diameter? or **Hole diameter?**	Diameter of probe contact (optional for holes)
Safety clearance?	Distance to the probe contact in the plane
Incr. clearance height?	Positioning of touch probe in spindle axis direction (starting from the current position)
Starting angle?	Angle for the first probing operation (0° = positive direction of principal axis, i.e. in X+ for spindle axis Z). All other probe angles result from the number of touch points.
Number of touch points?	Number of probing operations (3 to 8)
Angular length?	Probing a full circle (360°) or a circle segment (angular length<360°)

Automatic probing routine:

- Pre-position touch probe

- Select the probing function: Press the **PROBING CC** soft key

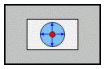

- Hole should be probed automatically: Press the **HOLE** soft key

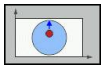

- Select paraxial probing direction

- Start probing function: Press the **NC START** key. The TNC carries out all pre-positioning and probing processes automatically

The TNC approaches the position at the feed rate **FMAX** defined in the touch probe table. The defined probing feed rate **F** is used for the actual probing operation.

Before starting the automatic probing routine, you need to preposition the touch probe near the first touch point. Offset the touch probe by approximately the safety clearance (value from touch probe table + value from input form) opposite to the probing direction.

For an inside circle with a large diameter, the TNC can also preposition the touch probe on a circular arc at the positioning feed rate FMAX. This requires that you enter a safety clearance for prepositioning and the hole diameter in the input form. Position the touch probe inside the hole at a position that is offset by approximately the safety clearance from the wall. For prepositioning, keep in mind the starting angle for the first probing operation (with an angle of 0°, the TNC probes in the positive direction of the principal axis).

Select probing cycle

- Select the **Manual operation** or **Electronic handwheel** operating mode

- Select the probing functions: Press the **PROBING FUNCTION** soft key

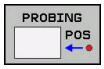

- Select the touch probe cycle: Press e.g. the **PROBING POS** soft key, and the TNC displays the associated menu on the screen

When you select a manual probing function, the TNC opens a form displaying all data required. The content of the forms varies depending on the respective function.

You can also enter values in some of the fields. Use the arrow keys to move to the desired input field. You can position the cursor only in fields that can be edited. Fields that cannot be edited appear dimmed.

Record measured values from the touch probe cycles

The TNC must be specially prepared by the machine tool builder for use of this function. Refer to your machine manual.

After executing the respective selected touch probe cycle, the TNC displays the **WRITE LOG TO FILE** soft key. If you press this soft key, the TNC will record the current values determined in the active touch probe cycle.

If you store the measuring results, the TNC creates the text file TCHPRMAN.TXT. If you have not specified a path in the machine parameter **fn16DefaultPath** (no. 102202), the TNC will save the TCHPRMAN.TXT and TCHPRMAN.html files in the main directory **TNC:**.

When you press the **WRITE LOG TO FILE** soft key, the TCHPRMAN.TXT file must not be active in the **Programming** mode of operation. The TNC will otherwise display an error message.

The TNC writes the measured values to the TCHPRMAN.TXT or TCHPRMAN.html file. If you execute several touch probe cycles in succession and want to store the resulting measured values, you must make a backup of the contents stored in TCHPRMAN.TXT in between the individual cycles by copying or renaming the file.

Format and content of the TCHPRMAN.TXT file are preset by the machine tool builder.

Writing measured values from the touch probe cycles to a datum table

Use this function to save measured values in the workpiece coordinate system. If you want to save measured values in the fixed machine coordinate system (REF coordinates), press the **ENTER IN PRESET TABLE** soft key. **Further Information:** Writing measured values from the touch probe cycles to the preset table, page 526

With the **ENTER IN DATUM TABLE** soft key, the TNC can write the values measured during any touch probe cycle as applicable to a datum table:

- Select any probe function
- Enter the desired coordinates for the datum in the designated input boxes (depends on the touch probe cycle being run)
- Enter the datum number in the **Number in table=** input box
- Press the **ENTER IN DATUM TABLE** soft key; the TNC saves the datum in the specified datum table under the entered number

Writing measured values from the touch probe cycles to the preset table

Use this function to save measure values in the fixed machine coordinate system (REF coordinates). If you want to save measured values in the workpiece coordinate system, press the **ENTER IN DATUM TABLE** soft key. **Further Information:** Writing measured values from the touch probe cycles to a datum table, page 525

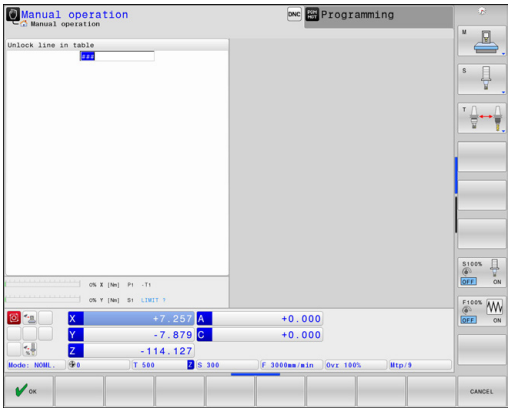

With the **ENTRY IN PRESET TABLE** soft key, the TNC can write the values measured during any probe cycle in the preset table. The measured values are then stored referenced to the machine-based coordinate system (REF coordinates). The preset table has the name PRESET.PR, and is saved in the directory TNC:\table\.

- Select any probe function
- Enter the desired coordinates for the datum in the designated input boxes (depends on the touch probe cycle being run)
- Enter the datum number in the **Number in table:** input box
- Press the **ENTRY IN PRESET TABLE** soft key. The TNC saves the datum in the preset table under the entered number
  - Preset number does not exist: The TNC saves the row only after the **OK** soft key has been pressed (Create row in table?)
  - Preset number is protected: Press the **OK** soft key and the active preset will be overwritten
  - Preset number is password-protected: Press the **OK** soft key, enter the password and the active preset will be overwritten

If writing to the table row is not possible due to a lock, the control displays a message. The probing is not aborted, however.

15.8 Calibrating a 3-D touch trigger probe

Introduction

In order to precisely specify the actual trigger point of a 3-D touch probe, you must calibrate the touch probe, otherwise the TNC cannot provide precise measuring results.

Always calibrate a touch probe in the following cases:

- Commissioning
- Broken stylus
- Stylus exchange
- Change in the probe feed rate
- Irregularities caused, for example, when the machine heats up
- Change of active tool axis

When you press the **OK** soft key after calibration, the calibration values are applied to the active touch probe. The updated tool data become effective immediately, and a new tool call is not necessary.

During calibration, the TNC finds the effective length of the stylus and the effective radius of the ball tip. To calibrate the 3-D touch probe, clamp a ring gauge or a stud of known height and known radius to the machine table.

The TNC has calibration cycles for calibrating the length and the radius:

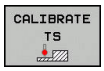

- Press the **PROBING FUNCTION** soft key
- Display the calibration cycles: Press **CALIBRATE TS**
- Select the calibration cycle

Calibration cycles of the TNC

Soft key	Function	Page
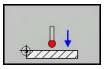	Calibrating the length	528
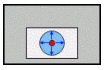	Measure the radius and the center offset using a calibration ring	529
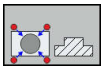	Measure the radius and the center offset using a stud or a calibration pin	529
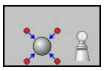	Measure the radius and the center offset using a calibration sphere	529

Calibrating the effective length

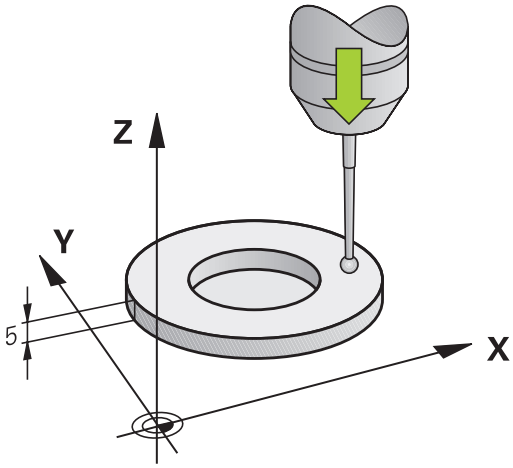

> **!** HEIDENHAIN only warrants the function of the touch probe cycles if HEIDENHAIN touch probes are used.

> ⇨ The effective length of the touch probe is always referenced to the tool datum. The machine tool builder usually defines the spindle tip as the tool datum.

- Set the datum in the spindle axis such that for the machine tool table Z=0.

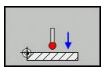

- Select the calibration function for the touch probe length: Press the **CAL. L** soft key. The TNC displays the current calibration data
- Datum for length: Enter the height of the ring gauge in the menu window
- Move the touch probe to a position just above the ring gauge
- To change the traverse direction (if necessary), press a soft key or an arrow key
- Probe surface: Press **NC START** key
- Check results
- Press the **OK** soft key for the values to take effect
- Press the **CANCEL** soft key to terminate the calibrating function. The TNC logs the calibration process in TCHPRMAN.html.

Calibrating the effective radius and compensating center misalignment

HEIDENHAIN only warrants the function of the touch probe cycles if HEIDENHAIN touch probes are used.

The center offset can be determined only with a suitable touch probe.

If you want to calibrate using the outside of an object, you need to preposition the touch probe above the center of the calibration sphere or calibration pin. Ensure that the touch points can be approached without collision.

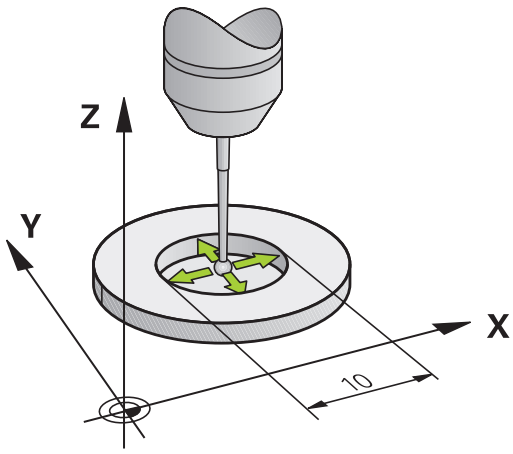

When calibrating the ball tip radius, the TNC executes an automatic probing routine. During the first cycle, the TNC determines the center of the calibration ring or stud (rough measurement) and positions the touch probe in the center. Then the ball tip radius is determined during the actual calibration process (fine measurement). If the touch probe allows probing from opposite orientations, the center offset is determined during another cycle.

The characteristic of whether and how your touch probe can be oriented is predefined in HEIDENHAIN touch probes. Other touch probes are configured by the machine manufacturer.

After the touch probe is inserted, it normally needs to be aligned exactly with the spindle axis. The calibration function can determine the offset between touch probe axis and spindle axis by probing from opposite orientations (rotation by 180°) and can calculate and implement the necessary compensation.

The calibration routine varies depending on how your touch probe can be oriented:

- No orientation possible or orientation possible in only one direction: The TNC executes one rough and one fine measurement and determines the effective ball tip radius (column R in tool.t)
- Orientation possible in two directions (e.g.HEIDENHAIN wired touch probes): The TNC executes one rough and one fine measurement, rotates the touch probe by 180° and then completes one more probing routine. The center offset (CAL_OF in tchprobe.tp) is determined in addition to the radius by probing from opposite orientations
- Orientation possible in any direction (e.g. HEIDENHAIN infrared systems): The TNC executes one rough and one fine measurement, rotates the touch probe by 180° and then completes one more probing routine. The center offset (CAL_OF in tchprobe.tp) is determined in addition to the radius by probing from opposite orientations

Calibration using a calibration ring

Proceed as follows for manual calibration using a calibration ring:

- In the **Manual operation** mode, position the ball tip inside the bore of the ring gauge
- Select the calibration function: Press the **CAL. R** soft key. The TNC displays the current calibration data
- Enter the diameter of the ring gauge
- Enter the start angle
- Enter the number of touch points
- Probe: Press the **NC START** key. The 3-D touch probe probes all required touch points in an automatic probing routine and calculates the effective ball-tip radius. If probing from opposite orientations is possible, the TNC calculates the center offset
- Check results
- Press the **OK** soft key for the values to take effect
- Press the **END** soft key to terminate the calibrating function. The TNC logs the calibration process in TCHPRMAN.html.

In order to be able to determine the ball-tip center misalignment, the TNC needs to be specially prepared by the machine manufacturer. Refer to your machine manual.

Calibration with a stud or calibration pin

Proceed as follows for manual calibration with a stud or calibration pin:

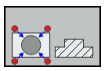

- In the **Manual operation** mode, position the ball tip above the center of the calibration pin
- Select the calibration function: Press the **CAL. R** soft key
- Enter the outside diameter of the stud
- Enter the safety clearance
- Enter the start angle
- Enter the number of touch points
- Probe: Press the **NC START** key. The 3-D touch probe probes all required touch points in an automatic probing routine and calculates the effective ball-tip radius. If probing from opposite orientations is possible, the TNC calculates the center offset
- Check results
- Press the **OK** soft key for the values to take effect
- Press the **END** soft key to terminate the calibrating function. The TNC logs the calibration process in TCHPRMAN.html.

In order to be able to determine the ball-tip center misalignment, the TNC needs to be specially prepared by the machine manufacturer.

Refer to your machine manual.

Calibration using a calibration sphere

Proceed as follows for manual calibration using a calibration sphere:

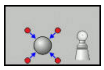

- In the **Manual operation** mode, position the ball tip above the center of the calibration ball
- Select the calibration function: Press the **CAL. R** soft key
- Enter the outside diameter of the ball
- Enter the safety clearance
- Enter the start angle
- Enter the number of touch points
- Select Length measurement, if applicable
- If necessary, input the reference for the length
- Probe: Press the **NC START** key. The 3-D touch probe probes all required touch points in an automatic probing routine and calculates the effective ball-tip radius. If probing from opposite orientations is possible, the TNC calculates the center offset
- Check results
- Press the **OK** soft key for the values to take effect
- Press the **END** soft key to terminate the calibrating function. The TNC logs the calibration process in TCHPRMAN.html.

In order to be able to determine the ball-tip center misalignment, the TNC needs to be specially prepared by the machine manufacturer.

Refer to your machine manual.

Displaying calibration values

The TNC saves the effective length and effective radius of the touch probe in the tool table. The TNC saves the ball tip center offset in the touch probe table, in the **CAL_OF1** (principal axis) and **CAL_OF2** (minor axis) columns. You can display the values on the screen by pressing the **TOUCH PROBE TABLE** soft key.

During calibration, the TNC automatically creates the TCHPRMAN.html log file to which the calibration values are saved.

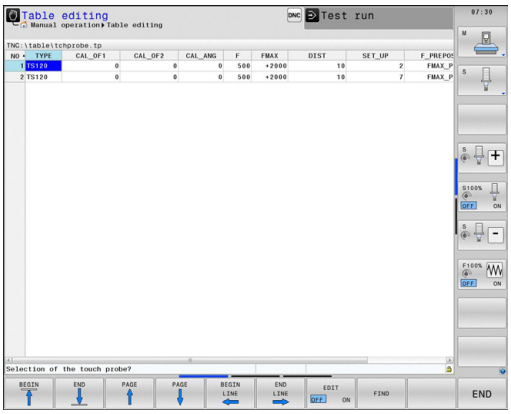

Please make sure the correct tool number is active when you use the touch probe system. Regardless of whether you want to use a touch probe cycle in automatic mode or **Manual operation** mode.

For more information about the touch probe table, refer to the Cycle Programming User's Manual.

15.9 Compensating workpiece misalignment with 3-D touch probe

Introduction

HEIDENHAIN only warrants the function of the touch probe cycles if HEIDENHAIN touch probes are used.

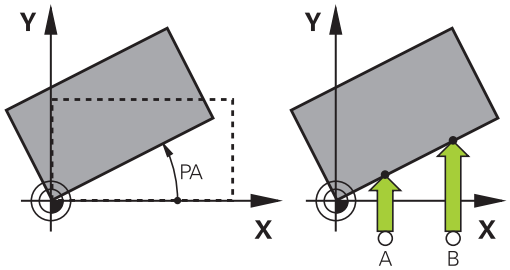

The TNC electronically compensates workpiece misalignment by computing a "basic rotation."

For this purpose, the TNC sets the rotation angle to the desired angle with respect to the reference axis in the working plane.

The TNC interprets the measured angle as rotation around the tool direction in the workpiece coordinate system, and saves the values in the columns SPA, SPB and SPC of the preset table.

To identify the basic rotation, probe two points on the side of the workpiece. The sequence in which you probe the points influences the calculated angle. The measured angle goes from the first to the second probing point. You can also identify the basic rotation by holes or studs.

Select the probe direction perpendicular to the angle reference axis when measuring workpiece misalignment.

To ensure that the basic rotation is calculated correctly during program run, program both coordinates of the working plane in the first positioning block.

You can also use a basic rotation in conjunction with the PLANE function. In this case, first activate the basic rotation and then the PLANE function.

You can also activate a basic rotation without probing a workpiece. For this purpose enter a value in the basic rotation menu and press the **SET BASIC ROTATION** soft key.

Identifying basic rotation

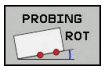

- Select the probing function by pressing the **PROBE ROTATION** soft key
- Position the touch probe at a position near the first touch point
- Select the probing direction or probing routine with the soft key
- Probe: Press the **NC START** key
- Position the touch probe at a position near the second touch point
- Probe: Press the **NC START** key. The TNC determines the basic rotation and displays the angle after the dialog **Rotation angle**
- Activate basic rotation: Press the **SET BASIC ROTATION** soft key
- Terminate the probing function: Press the **END** soft key.

The TNC logs the probing process in TCHPRMAN.html.

Saving a basic rotation in the preset table

- After the probing process, enter the preset number in which the TNC is to save the active basic rotation in the **Number in table:** input box
- Press the **BASIC ROT. IN PRESETTAB.** soft key to save the basic rotation in the preset table

Compensation of workpiece misalignment by rotating the table

- To compensate the identified misalignment by a rotary table position, press the **ALIGN ROTARY TABLE** soft key after the probing process

> **!** Position all axes to avoid a collision before table rotation. The TNC outputs an additional warning before table rotation.

- If you want to set the datum in the rotary table axis, press the **SET TABLE ROTATION** soft key.
- You can also save the misalignment of the rotary table in any line of the Preset table. Enter the line number and press the **TABLEROT IN PRESETTAB.** soft key. The TNC saves the angle in the offset column of the rotary table, e.g. in the C_OFFS column with a C axis. If necessary, the view in the Preset table has to be changed with the **BASIS-TRANSFORM./OFFSET** soft key to display this column.

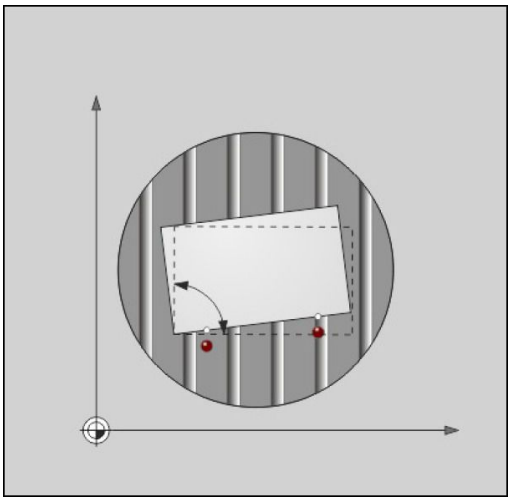

Displaying a basic rotation

When you select the **PROBINGPROBING** function, the TNC displays the active angle of basic rotation in the **Rotation Angle** dialog. In addition, the rotary angle is shown in the split screen **PROGRAM + STATUS** screen layout in the **STATUS POS.** tab.

When the TNC moves along the machine axis in accordance with the basic rotation, a symbol for the basic rotation is shown in the status display.

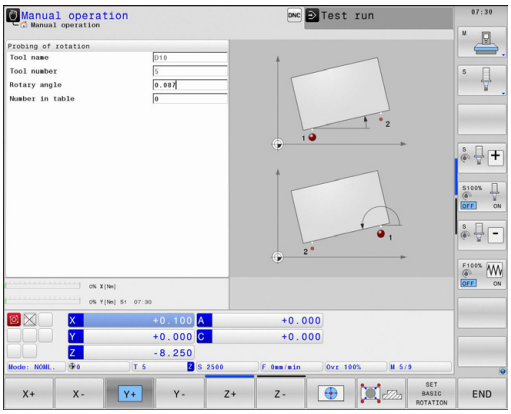

Canceling a basic rotation

- Select the probe function by pressing the **PROBING ROT** soft key
- Enter a rotation angle of "0" and confirm with the **SET BASIC ROTATION** soft key
- Terminate the probe function by pressing the **END** soft key

Measuring 3-D basic rotation

The misalignment of any tilted plane can be measured by probing three positions. The **Probe plane** function enables you to measure this misalignment and save it as a 3-D basic rotation in the preset table.

Observe the following when selecting the touch points:

The sequence and position of the touch points determines how the TNC calculates the direction of the plane.

With the first two points you specify the direction of the reference axis. Define the second point in the positive direction of the desired reference axis. The position of the third point determines the direction of the minor axis and tool axis. Define the third point in the positive Y axis of the desired workplace coordinate system.

- 1st point: On the reference axis
- 2nd point: On the reference axis, in a positive direction from the first point
- 3rd point: On the minor axis, in a positive direction of the desired workpiece coordinate system

Optionally inputting a datum angle enables you to define the nominal direction of the probed plane.

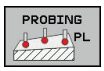

- Select the probing function: Press the **PROBING PL** soft key. The TNC then displays the current 3-D basic rotation
- Position the touch probe at a position near the first touch point
- Select the probe direction or probing routine by soft key
- Probe: Press the **NC START** key
- Position the touch probe at a position near the second touch point
- Probe: Press the **NC START** key
- Position the touch probe near the third touch point
- Probe: Press the **NC START** key. The TNC measures the 3-D basic rotation and displays the values for SPA, SPB and SPC in relation to the active workpiece coordinate system
- If required, enter the datum angle

Activate 3-D basic rotation:

- Press the **SET BASIC ROTATION** soft key

Saving a 3-D basic rotation in the preset table:

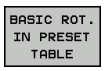

- Press the **BASIC ROT. IN PRESET TABLE** soft key

- Terminate the probe function by pressing the **END** soft key

The TNC saves the 3-D basic rotation in the columns SPA, SPB or SPC of the preset table.

Aligning 3-D basic rotation

If the machine has two rotary axes and the probed 3-D basic rotation is activated, you can align the rotary axes with reference to the 3-D basic rotation using the **ALIGN ROTARY AXES** soft key. In such cases, the Tilt working plane function becomes active for all machine operating modes.

After aligning the plane, you can align the reference axis with the **Probing rot** function.

Displaying 3-D basic rotation

When a 3-D basic rotation is saved in the active datum, the TNC shows the symbol for the 3-D basic rotation in the status display. The TNC traverses the machine axes according to the 3-D basic rotation.

Canceling a 3-D basic rotation

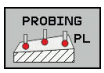

- Select the probe function by pressing the **PROBING PL** soft key
- Enter 0 for all angles
- Press the **SET BASIC ROTATION** soft key
- Terminate the probe function by pressing the **END** soft key

15.10 Datum setting with a 3-D touch probe

Overview

The following soft-key functions are available for setting a datum on an aligned workpiece:

Soft key	Function	Page
PROBING POS	Datum setting on any axis with	538
PROBING P	Setting a corner as datum	539
PROBING CC	Setting a circle center as datum	540
PROBING CL	Center line as datum Setting the center line as datum	543

> **!** Please ensure that the TNC refers to the probed value on the active datum or the last defined datum in **MANUAL OPERATION** mode with active datum shift. The datum shift is included in the position display.

Datum setting on any axis

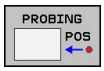

- Select the probing function: Press the **POSITION PROBING** soft key
- Move the touch probe to a position near the touch point
- Select the axis and probing direction, e.g. Probe in direction Z-
- Probe: Press the **NC START** key
- **Datum**: Enter nominal coordinates, confirm with the **SET DATUM** soft key
  Further Information: Writing measured values from the touch probe cycles to a datum table, page 525
- Terminate the probe function by pressing the **END** soft key

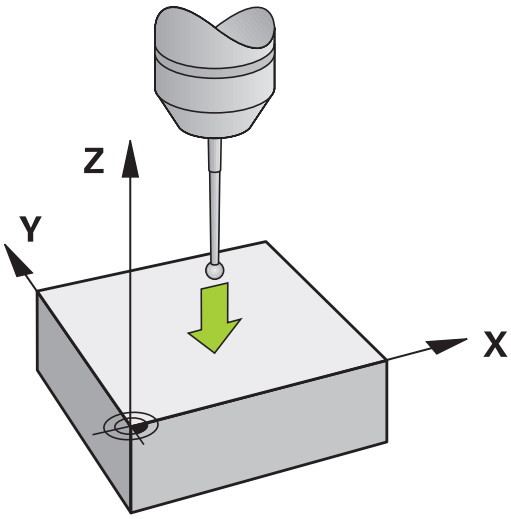

> **⚠** HEIDENHAIN only warrants the function of the touch probe cycles if HEIDENHAIN touch probes are used.

Corner as datum

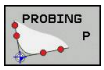

- Select the probing function: Press the **PROBING P** soft key
- Position the touch probe near the first touch point on the first workpiece edge
- Select the probing direction: Select with soft key
- Probe: Press the **NC START** key
- Position the touch probe near the second touch point on the same workpiece edge
- Probe: Press the **NC START** key
- Position the touch probe near the first touch point on the second workpiece edge
- Select the probing direction: Select with soft key
- Probe: Press the **NC START** key
- Position the touch probe near the second touch point on the same workpiece edge
- Probe: Press the **NC START** key
- **Datum**: Enter both datum coordinates in the menu window, use the **SET DATUM** soft key to confirm **Further Information:** Writing measured values from the touch probe cycles to the preset table, page 526
- Terminate the probe function by pressing the **END** soft key

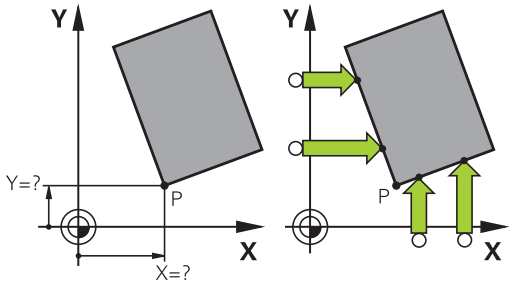

HEIDENHAIN only warrants the function of the touch probe cycles if HEIDENHAIN touch probes are used.

You can identify the intersection of two straight lines using holes or studs and set this as the datum. For each straight line however, probing must only be with two identical touch probe functions (e.g. two holes).

The "Corner as datum" probing cycle identifies the angle and intersection of two straight lines. In addition to datum setting, the cycle can also activate a basic rotation. The TNC has two soft keys for you to determine the straight line that you wish to use for this. The **ROT 1** soft key activates the angle of the first straight line as basic rotation and the **ROT 2** soft key the angle of the second straight line.

If you wish to activate the basic rotation in the cycle, you must always do this before datum setting. Once you set a datum or write to a datum or preset table the, **ROT 1** and **ROT 2** soft keys are no longer displayed.

Circle center as datum

With this function, you can set the datum at the center of bore holes, circular pockets, cylinders, studs, circular islands, etc.

Inside circle:

The TNC probes the inside wall of a circle in all four coordinate axis directions.

For incomplete circles (circular arcs) you can choose the appropriate probing direction.

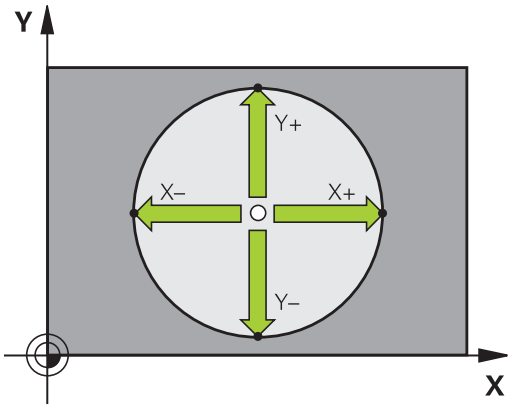

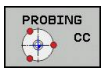

- Position the touch probe approximately in the center of the circle
- Select the touch probe function: Press the **PROBING CC** soft key
- Select the soft key for the desired probing direction
- Probe: Press the **NC START** key. The touch probe probes the inside wall of the circle in the selected direction. Repeat this process. After the third probing operation, you can have the TNC calculate the center (four touch points are recommended)
- Terminate the probing procedure and switch to the evaluation menu: Press the **EVALUATE** soft key
- **Datum**: Enter both coordinates of the center of the circle in the menu window, confirm with the **SET DATUM** soft key or write values to a table
  Further Information: Writing measured values from the touch probe cycles to a datum table, page 525
  Further Information: Writing measured values from the touch probe cycles to the preset table, page 526
- Terminate the probe function by pressing the **END** soft key

> The TNC needs only three touch points to calculate outside or inside circles, e.g. for circle segments. More precise results are obtained if you measure circles using four touch points, however. You should always preposition the touch probe in the center, or as close to the center as possible.

Outside circle:

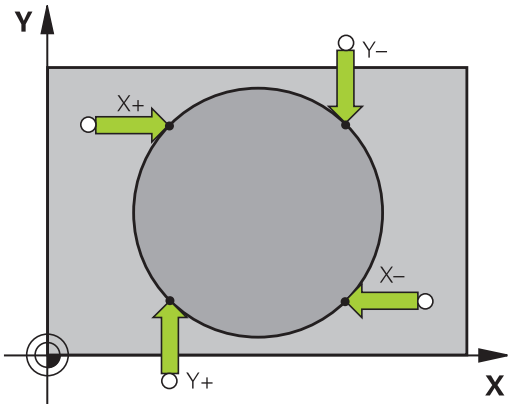

- Position the touch probe at a position near the first touch point outside of the circle
- Select the touch probe function: Press the **PROBING CC** soft key
- Select the soft key for the desired probing direction
- Probe: Press the **NC START** key. The touch probe probes the inside wall of the circle in the selected direction. Repeat this process. After the third probing operation, you can have the TNC calculate the center (four touch points are recommended)
- Terminate the probing procedure and switch to the evaluation menu: Press the **EVALUATE** soft key
- **Datum**: Enter the coordinates of the datum, confirm with the **SET DATUM** soft key or write values to a table
  Further Information: Writing measured values from the touch probe cycles to a datum table, page 525
  Further Information: Writing measured values from the touch probe cycles to the preset table, page 526)
- Terminate the probe function by pressing the **END** soft key

Once the probing routine is completed, the TNC displays the current coordinates of the circle center and the circle radius.

Setting the datum using multiple holes/cylindrical studs

The manual probing function **Model Circle** is part of the **Circle** probing function. Individual circles can be determined with paraxial probing operations.

A second soft-key row contains the **PROBING CC (Model Circle)** soft key, with which you can set the datum for the arrangement of several holes or circular studs. You can set the intersection of two or more elements to be probed as a datum.

Setting the datum in the intersection of multiple holes/circular studs:

- Pre-position touch probe

Select **Model Circle** probing function

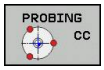

- Select the touch probe function: Press the **PROBING CC** soft key

- Press the **PROBING CC (Model Circle)** soft key

Probe a circular stud

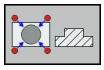

- Circular stud should be probed automatically: Press **STUD** soft key

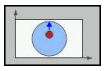

- Enter starting angle or select using soft key

- Start probing function: Press the **NC START** soft key

Probe the hole.

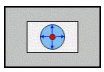

- Hole should be probed automatically: Press the **HOLE** soft key

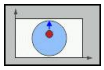

- Enter starting angle or select using soft key

- Start probing function: Press the **NC START** soft key
- Repeat the probing procedure for the remaining elements
- Terminate the probing procedure and switch to the evaluation menu: Press the **EVALUATE** soft key
- **Datum**: Enter both coordinates of the center of the circle in the menu window, confirm with the **SET DATUM** soft key or write values to a table
  Further Information: Writing measured values from the touch probe cycles to a datum table, page 525
  Further Information: Writing measured values from the touch probe cycles to the preset table, page 526
- Terminate the probe function by pressing the **END** soft key

Setting a center line as datum

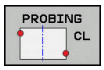

- Select the probing function: Press the **PROBING CL** soft key
- Position the touch probe at a position near the first touch point
- Select the probing direction with the soft key
- Probe: Press the **NC START** key
- Position the touch probe at a position near the second touch point
- Probe: Press the **NC START** key
- **Datum**: Enter the datum coordinates in the menu window, confirm with the **SET DATUM** soft key or write the value to a table
  Further Information: Writing measured values from the touch probe cycles to a datum table, page 525
  Further Information: Writing measured values from the touch probe cycles to the preset table, page 526
- Terminate the probe function: Press the soft key **END**

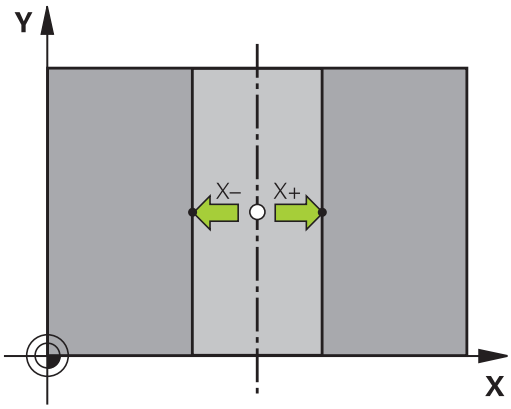

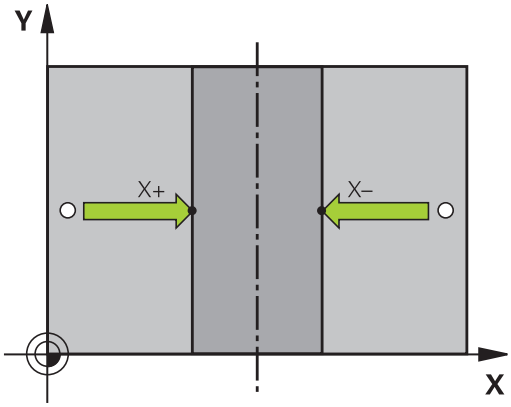

After you have measured the second touch point, you can use the evaluation menu to change the direction of the centerline. Using the soft keys, you can choose whether the datum should be set in the principal axis, minor axis or tool axis. This may be required if you want to save the set position on the principal or minor axis.

Measuring workpieces with a 3-D touch probe

You can also use the touch probe in the **Manual operation** and **Electronic handwheel** operating modes to perform simple measurements on the workpiece. Numerous programmable touch probe cycles are available for more complex measuring tasks.

Further information: Cycle Programing User's Manual

With a 3-D touch probe you can determine:

- Position coordinates, and from them,
- Dimensions and angles on the workpiece

Finding the coordinates of a position on an aligned workpiece

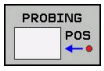

- Select the probing function: Press the **PROBING POS** soft key
- Move the touch probe to a position near the touch point
- Select the probing direction and the axis to which the coordinates relate: Use the corresponding soft keys to select
- Start the probing process: Press the **NC START** key

The TNC shows the coordinates of the touch point as reference point.

Finding the coordinates of a corner point on the working plane

Find the coordinates of the corner point.

Further Information: Corner as datum , page 539

The TNC displays the coordinates of the probed corner as datum.

Measuring workpiece dimensions

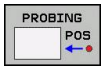

- Select the probing function: Press the **PROBING POS** soft key
- Position the touch probe at a position near the first touch point A
- Select the probing direction with the soft key
- Probe: Press the **NC START** key
- Note the value shown as the datum (only if the previously set datum remains effective)
- Datum: Enter "0"
- Cancel the dialog: Press the **END** key
- Select the probing function again: Press the **PROBING POS** soft key
- Position the touch probe at a position near the second touch point B
- Select the probing direction with the soft key: Same axis but from the opposite direction to the first probing routine.
- Probe: Press the **NC START** key

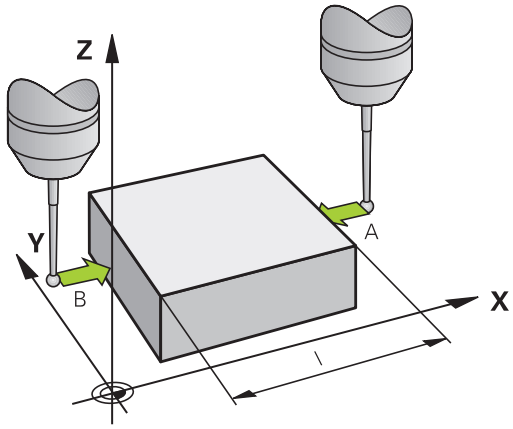

The **Measured Value** display shows the distance between the two points on the coordinate axis.

To return to the datum that was active before the length measurement:

- Select the probing function: Press the **PROBING POS** soft key
- Probe the first touch point again
- Set the datum to the value that you wrote down previously
- Cancel the dialog: Press the **END** key

Measuring angles

You can use the 3-D touch probe to measure angles in the working plane. You can measure

- The angle between the angle reference axis and a workpiece edge; or
- the angle between two sides

The measured angle is displayed as a value of max. 90°.

Finding the angle between the angle reference axis and a workpiece edge

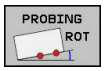

- Select the probe function by pressing the **PROBING ROT** soft key
- Rotation angle: If you wish to restore the current basic rotation later, note the value that appears under Rotation Angle
- Perform a basic rotation with the workpiece edge to be compared
  Further Information: Compensating workpiece misalignment with 3-D touch probe , page 534
- Press the **PROBING ROT** soft key to display the angle between the angle reference axis and the workpiece edge as the rotation angle
- Cancel the basic rotation, or restore the previous basic rotation
- Set the rotation angle to the value that you previously wrote down

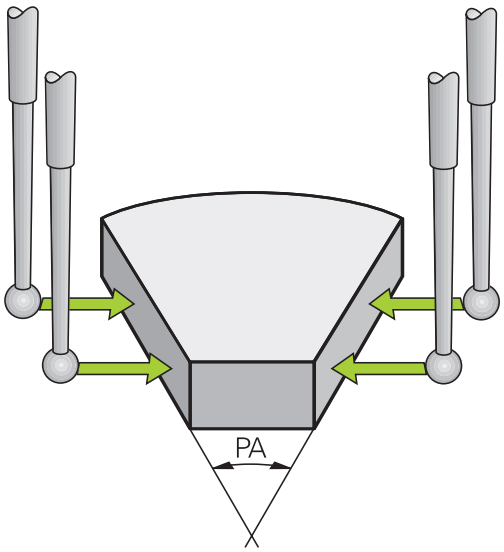

Measuring the angle between two workpiece edges

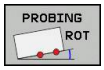

- Select the probe function by pressing the **PROBING ROT** soft key
- Rotation angle: If you wish to restore the current basic rotation later, note the value that appears under Rotation Angle
- Perform a basic rotation with the workpiece edge to be compared
  Further Information: Compensating workpiece misalignment with 3-D touch probe , page 534
- Probe the second edge in the same way as for a basic rotation, but do not set the rotation angle to 0
- Press the **ROTATION PROBING** soft key to display the angle PA between the workpiece edges as the rotation angle
- Cancel the basic rotation, or restore the previous basic rotation by setting the rotation angle to the value that you wrote down previously

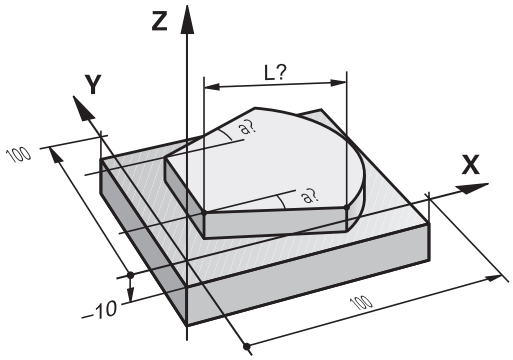

15.11 Tilting the working plane (option 8)

Application, function

The functions for tilting the working plane are interfaced to the TNC and the machine tool by the machine tool builder. With some swivel heads and tilting tables, the machine tool builder determines whether the entered angles are interpreted as coordinates of the rotary axes or as angular components of a tilted plane. Refer to your machine manual.

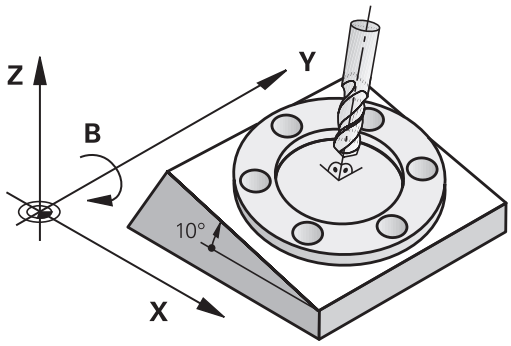

The TNC supports the tilting functions on machine tools with swivel heads and/or tilting tables. Typical applications are, for example, oblique holes or contours in an oblique plane. The working plane is always tilted around the active datum. The program is written as usual in a main plane, such as the X/Y plane, but is executed in a plane that is tilted relative to the main plane.

There are three functions available for tilting the working plane:

- Manual tilting with the **3-D ROT** soft key in the **Manual operation** mode and **Electronic handwheel** modes
  Further Information: Activating manual tilting:, page 550
- Controlled tilting, Cycle **G80** in machining program
  Further information: Cycle Programing User's Manual
- Tilting under program control, **PLANE** function in the machining program
  Further Information: The PLANE function: Tilting the working plane (software option 8), page 423

The TNC functions for tilting the working plane are coordinate transformations. The working plane is always perpendicular to the direction of the tool axis.

15.11 Tilting the working plane (option 8)

When tilting the working plane, the TNC differentiates between two machine types:

- **Machine with tilting table**
  - You must tilt the workpiece into the desired position for machining by positioning the tilting table, for example with an G01 block.
  - The position of the transformed tool axis **does not change** in relation to the machine-based coordinate system. Thus if you rotate the table – and therefore the workpiece – by 90° for example, the coordinate system does **not** rotate. If you press the Z+ axis direction button in the **Manual operation** mode, the tool moves in Z+ direction.
  - In calculating the transformed coordinate system, the TNC considers only the mechanically influenced offsets of the particular tilting table (the so-called "translational" components).
- **Machine with swivel head**
  - You must tilt the workpiece into the desired position for machining by positioning the swivel head, for example with an G01 block
  - The position of the transformed tool axis changes in relation to the machine-based coordinate system. Thus if you rotate the swivel head of your machine—and therefore the tool —in the B axis by 90° for example, the coordinate system also rotates. If you press the Z+ axis direction button in the **Manual operation** mode, the tool moves in X+ direction of the fixed machine coordinate system.
  - In calculating the transformed coordinate system, the TNC considers both the mechanically influenced offsets of the particular swivel head (the so-called “translational” components) and offsets caused by tilting of the tool (3-D tool length compensation).

The TNC only supports tilting the working plane with spindle axis G17.

Traversing datums in tilted axes

The TNC automatically activates the tilted working plane if this function was enabled when the control was switched off. Then the TNC moves the axes in the tilted coordinate system when an axis-direction key is pressed. Position the tool in such a way that a collision is excluded during the subsequent crossing of the datums. To cross the datums you have to deactivate the "Tilt working plane" function.

Further Information: Activating manual tilting:, page 550

> **!**
>
> **Danger of collision!**
>
> Make sure that the Tilt working plane function is active in the **MANUAL OPERATION** mode and that the angle values entered in the menu match the actual angles of the tilted axis.
>
> Deactivate the "Tilt Working Plane" function before you cross the reference points. Take care that there is no collision. Retract the tool from the current position first, if necessary.

Position display in a tilted system

The positions displayed in the status window **(ACTL.** and **NOML.)** are referenced to the tilted coordinate system.

Limitations on working with the tilting function

- The **Actual-position capture** function is not allowed if the Tilt working plane function is active
- PLC positioning (determined by the machine tool builder) is not possible.

Activating manual tilting:

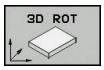

- To select manual tilting, press the **3-D ROT** soft key.

- Use the arrow keys to move the cursor to the menu point **Manual operation**

- To activate manual tilting, press the **ACTIVE** soft key

- Use the arrow keys to position the cursor on the desired rotary axis
- Enter the tilt angle

- To conclude entry, press the **END** key

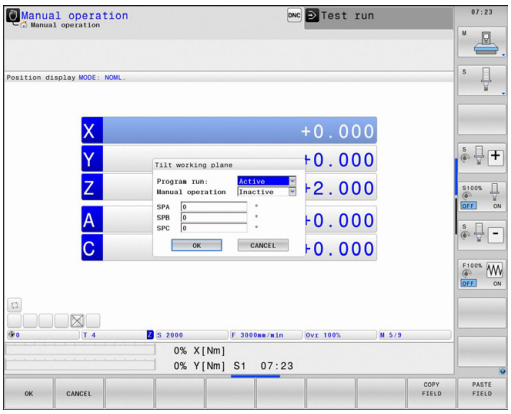

If the tilted working plane function is active and the TNC moves the machine axes in accordance with the tilted axes, the status display shows the symbol.

If you set the "Tilt working plane" function for the **Program run** operating mode to **active**, the tilt angle entered in the menu becomes active in the first block of the machining program. If you use Cycle **G80** or the **PLANE** function in the machining program, the angle values defined there are in effect. Angle values entered in the menu will be overwritten.

To deactivate manual tilting

To deactivate the tilting function, set the desired operating modes in the **Tilt working plane** menu to **Inactive**.

Even if the **3-D ROT**dialog in the **Manual operation** mode is set to **active**, resetting the working plane tilt (**PLANE RESET**) will work correctly with an active basic transformation.

Setting the tool-axis direction as the active machining direction

This function must be enabled by your machine manufacturer. Refer to your machine manual.

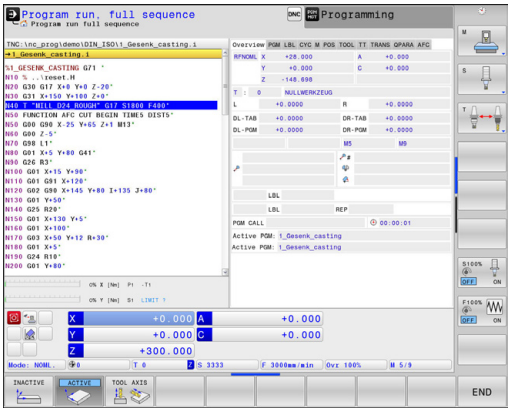

Using this function in the **Manual operation** and **Electronic handwheel** operating modes, you can move the tool in the direction in which the tool axis is currently pointed using the axis direction keys or with the handwheel. Use this function if

- You want to retract the tool in the direction of the tool axis during suspension of a 5-axis machining program
- You want to machine with an inclined tool using the handwheel or the axis direction keys in Manual Operation mode

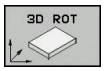

- To select manual tilting, press the **3-D ROT** soft key.

- Use the arrow keys to move the cursor to the **Manual operation** menu item

- To activate the current tool axis direction as the active machining direction, press the **TOOL AXIS** soft key

- To conclude entry, press the **END** key

To deactivate the tilting function, set the **Manual operation** menu item in the "Tilt working plane" menu to inactive.

The symbol appears in the status display when the Move in tool axis direction function is active.

This function is even available when you interrupt program run and want to move the axes manually.

Setting a datum in a tilted coordinate system

After you have positioned the rotary axes, set the preset in the same manner as for a non-tilted system. The behavior of the TNC during datum setting depends on the setting in machine parameter **chkTiltingAxes** (no. 204601):

- **chkTiltingAxes: On** With an active tilted working plane, the TNC checks during datum setting in the X, Y and Z axes whether the current coordinates of the rotary axes agree with the tilt angles that you defined (3-D ROT menu). If the Tilt working plane function is not active, the TNC checks whether the rotary axes are at 0° (actual positions). If the positions do not reconcile, then the TNC issues an error message.
- **chkTiltingAxes: Off** The TNC does not check whether the current coordinates of the rotary axes (actual positions) agree with the tilt angles that you have defined.

Danger of collision!
Always set a reference point in all three reference axes.

15.12 Camera-based monitoring of the setup situation VSC (option number136)

Basics

Application

Camera-based checking of the setup situation (option number 136 Visual Setup Control) allows you to monitor the current setup situation before and during processing, and to compare this with a safe target status. After setup, simple cycles for automatic monitoring are available.

Reference images of the current working space are recorded in the camera system. With cycles G600 **GLOBAL WORKING SPACE** or G601 **LOCAL WORKING SPACE**, the TNC produces an image of the working space and compares the image with previously prepared reference images. These cycles can highlight irregularities in the working space. The operator decides if the NC program should be suspended or continued in the event of a fault.

Using VSC offers the following advantages:

- The control can recognize elements (e.g.tools or chucking equipment) located in the working space after the start of the program
- If you would always like to clamp a workpiece in the same position (e.g. hole top right), the control can check the clamping situation
- For documentation purposes you can produce an image of the current working space (e.g.of a rarely-needed clamping situation)

Further information: Cycle Programing User's Manual

Requirements

As well as option number 136, a HEIDENHAIN camera system is required for VSC functions.

You must create an adequate number of reference images to allow the system to compare the situation reliably.

Terms

The following terms are used in connection with VSC:

Term	Explanation
Reference image	Saved image, highlighted as a reference. A reference image shows a situation in the working space that you regard as safe. Therefore only create reference images showing safe, non-hazardous situations.
Mid-value image	The control creates a mid-value image taking into account all reference images. The control compares new images with the mid-value image as part of evaluation.

15.12 Camera-based monitoring of the setup situation VSC (option number136)

Term	Explanation
Error	If you take a picture that shows a poor situation (e.g.workpiece wrongly clamped), you can create what is known as an error image. It is not advisable to highlight an error image as a reference image.
Monitoring area	Denotes an area that you highlight with the mouse. When evaluating new images, the control only refers to this area. Parts of images outside the monitoring area have no effect on the results of the monitoring process. Several monitoring areas can be defined. Monitoring areas are not linked to images.
Error	Area on an image containing a deviation form the desired position. Errors always relate to the image to which they were saved (error image) or to the last image evaluated.
Monitoring phase	No further reference images are produced in the monitoring phase. You can use the cycle for automatic monitoring of your working space. In this phase, the control only issues a warning if it finds a deviation when comparing images.

Overview

In the **Manual operation** mode, the control offers the following options:

Soft key	Function
CAMERA	Open main VSC menu
LIVE IMAGE	Show current camera view
MONITORING DATA MANAGEMENT	Open VSC file manager The control shows the data saved for Cycle 600 and Cycle 601.
OPEN THE CAMERA COVER	Open camera cover
CLOSE THE CAMERA COVER	Close camera cover

Produce live image

In the **Manual operation** mode, you can display and save the current camera view as a live image.

The control only uses the picture taken here for automatic monitoring of the setup situation. Images produced in this menu may be used for documentation and traceability. For example, you could record the current setup situation. The control saves the image produced as a .png file in **TNC:\system\visontool\live_view**. The name of the saved image is made up of the date and time it was created.

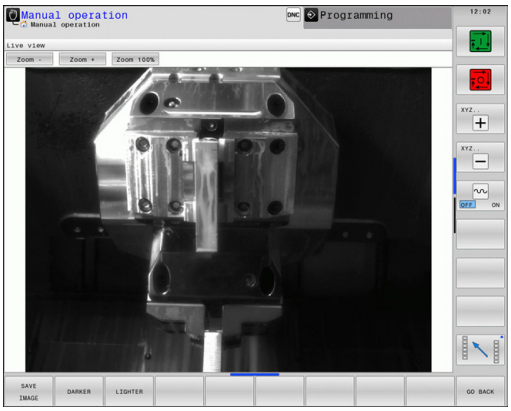

Procedure

Proceed as follows to save the camera's live image:

- Press the **CAMERA** soft key

- Press the **LIVE IMAGE** soft key: The TNC shows you the current camera view

- Press the **SAVE IMAGE** soft key: Create a live image from the current camera view

Options in Live Image mode

The control provides the following options:

Soft key	Function
LIGHTER	Increase camera brightness The settings made here only affect Live Image mode, and and have no influence on pictures taken in automatic mode.
DARKER	Reduce camera brightness The settings made here only affect Live Image mode, and and have no influence on pictures taken in automatic mode.
GO BACK	Go back to the previous screen

Manage monitoring data

In the **Manual operation** mode you can manage images from cycles 600 and 601.

Proceed as follows to enter the monitoring data:

- Press the **CAMERA** soft key

- Press the **MONITORING DATA MANAGEMENT** soft key: The control shows a list of the NC programs monitored

- Press the **OPEN** soft key: The control shows a list of monitoring points
- Edit the desired data

Select data

You can select the marked interfaces **1** with the mouse. These interfaces make it easier to search and show results in a manageable way.

- **All images**: Display all images for this monitoring file
- **Reference images**: Only display reference images
- **Images with error**: Display all images where you have highlighted an error

Features of the monitoring data management

Soft key	Function
REFERENCE IMAGE	Mark selected image as a reference image Please note: A reference image shows a situation in the working space that you regard as safe. All reference images are used as part of the evaluation process. If you add or remove an image as a reference image, this has an effect on the results of image evaluation.
DELETE IMAGE	Delete image currently selected
EVALUATE ALL IMAGES	Carry out automatic image evaluation The control carries out an image evaluation according to the reference images and the monitoring areas.
CONFIGURE	Change monitoring area or highlight an error **Further Information:** Configuration, page 558
GO BACK	Go back to the previous screen If you change the configuration, the control carries out an image evaluation.

15.12 Camera-based monitoring of the setup situation VSC (option number136)

Configuration

You have the option of changing your settings for the monitoring area and errors at any time. When you press the **CONFIGURE** soft key, the soft key display changes and you can change your settings.

Soft key	Function
CONFIGURE	Change settings for the monitoring area and sensitivity If you make a change in this menu, the results of the image evaluation may change.
DRAW AREA	Draw a new monitoring area: Click on the image and open a square frame. If you add a new monitoring area, or change/delete monitoring areas already set, this will have an effect on the image evaluation. The same monitoring area applies to all reference images.
DRAW ERROR	Draw a new error: Click on the image and open a square frame
EVALUATE IMAGE	The control checks if or how the new settings affect this image
EVALUATE ALL IMAGES	The control checks if or how the new settings affect all images
SAVE AND GO BACK	Save current image and return to the previous screen If you change the configuration, the control carries out an image evaluation.
GO BACK	Discard images and return to the previous screen

Results of the image evaluation

The results of the image evaluation depend on the monitoring area and the reference images. When evaluating all images, each image is evaluated according to the current configuration and the results are compared with the data last saved.

If you change the monitoring area or add/delete reference images, the images may be tagged with the following symbol:

- **Triangle:** You have changed the monitoring data, e.g. tagged an image with errors as a reference image or deleted a monitoring area. This makes the monitoring less sensitive.

  This has an effect on your reference images and on the mid-value image. The changes to the configuration mean that the control can no longer recognize errors which were previously saved to this image! If you would like to continue, confirm the reduced monitoring sensitivity and the new settings will be accepted.
- **Solid circle:** You have changed the monitoring data, monitoring is more sensitive.
- **Blank circle:** No error message: All deviations saved in the image have been recognized, monitoring has not identified any conflicts.

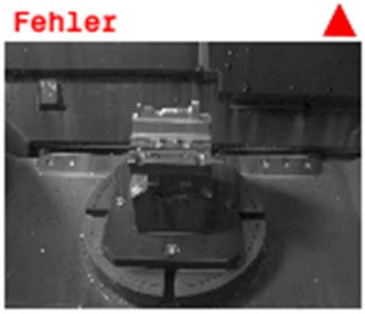

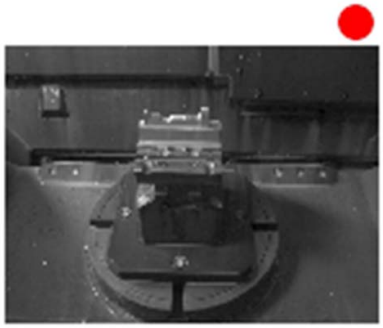

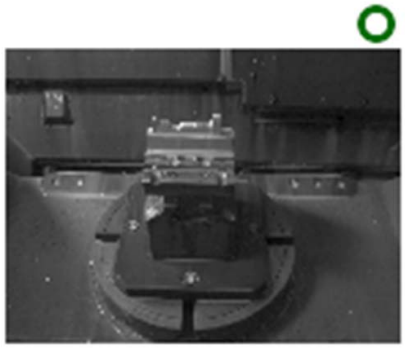

16

Positioning with Manual Data Input

16.1 Programming and executing simple machining operations

The **Positioning with Manual Data Input** mode of operation is particularly convenient for simple machining operations or to pre-position the tool. It enables you to write a short program in HEIDENHAIN conversational programming or in ISO format, and execute it immediately. You can also call TNC cycles. The program is stored in the file $MDI. In the **Positioning with MDI** mode of operation, the additional status display can also be activated.

Positioning with manual data input (MDI)

Limitation

The following functions are not available in the **Positioning with MDI** operating mode:

- FK free contour programming
- Program section repetitions
- Subprogramming
- Path compensations RL and RR
- The programming graphics
- Program call **%**
- Program run graphics

- Select the **Positioning with manl.data input** operating mode; program the $MDI file as desired

- Start program run: Press the **NC START** key

Example 1

A hole with a depth of 20 mm is to be drilled into a single workpiece. After clamping and aligning the workpiece and setting the datum, you can program and execute the drilling operation with a few lines of programming.

First you pre-position the tool above the workpiece with straight-line blocks and position with a safety clearance of 5 mm above the hole. Then drill the hole with Cycle **G200**.

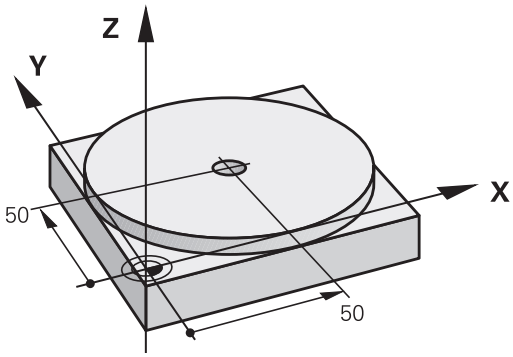

%$MDI G71 *		
N10 T1 G17 S2000 *		Call the tool: tool axis Z,
		spindle speed 2000 rpm
N20 G00 G40 G90 Z+200 *		Retract the tool (rapid traverse)
N30 X+50 Y+50 M3 *		Move the tool at rapid traverse to a position above the hole. Spindle on.
N40 G01 Z+2 F2000 *		Position the tool to 2 mm above the hole
N50 G200 DRILLING *		Define Cycle G200 DRILLING
Q200=2	**;SET-UP CLEARANCE**	Set-up clearance of the tool above the hole
Q201=-20	**;DEPTH**	Hole depth (algebraic sign=working direction)
Q206=250	**;FEED RATE FOR PLNGNG**	Feed rate for drilling
Q202=10	**;PLUNGING DEPTH**	Depth of each infeed before retraction
Q210=0	**;DWELL TIME AT TOP**	Dwell time at top for chip release (in seconds)
Q203=+0	**;SURFACE COORDINATE**	Workpiece surface coordinate
Q204=50	**;2ND SET-UP CLEARANCE**	Position after the cycle, with respect to Q203
Q211=0.5	**;DWELL TIME AT DEPTH**	Dwell time in seconds at the hole bottom
Q395=0	**;DEPTH REFERENCE**	Depth referenced to the tool tip or the cylindrical part of the tool
N60 G79 *		Call Cycle G200 PECKING
N70 G00 G40 Z+200 M2 *		Retract the tool
N9999999 %$MDI G71 *		End of program

Straight-line function:

Further Information: Straight line in rapid traverse G00 or straight line with feed rate F G01, page 225

DRILLING cycle:

Example 2: Correcting workpiece misalignment on machines with rotary tables

- Use a 3-D touch probe to carry out a basic rotation
  Further Information: Compensating workpiece misalignment with 3-D touch probe , page 534
- Write down the rotation angle and cancel the basic rotation

- Select operating mode: **Positioning with manl.data input**

- Select the rotary table axis, enter the rotation angle and feed rate you wrote down, e.g. **G01 C +2.561 F50**

- Conclude entry

- Press the **NC START** button: The rotation of the table corrects the misalignment

Protecting and erasing programs in $MDI

The $MDI file is intended for short programs that are only needed temporarily. Nevertheless, you can store a program, if necessary, by proceeding as described below:

- Select the **Programming** mode
- To call the file manager, press the **PGM MGT** key.
- Move the highlight to the **$MD** file
- Copy a file: Press the **COPY** soft key

DESTINATION FILE =

- Enter the name under which you want to save the current contents of the $MDI file, e.g.**HOLE**
- Press the **OK** soft key
- Close the file manager by pressing the soft key **END**

Further Information: Copying a single file, page 124

17

Test Run and Program Run

17.1 Graphics

Application

In the **Program Run, Single Block** and **Program Run, Full Sequence** operating modes as well as in the **Test Run** operating mode, the TNC simulates the machining of the workpiece.

The TNC features the following views:

- Plan view
- Projection in three planes
- 3-D view

> In the **Test Run** operating mode, you can also use the 3-D line graphics.

The TNC graphic depicts the workpiece as if it were being machined with a cylindrical end mill.

If a tool table is active, the TNC also considers the entries in the LCUTS, T-ANGLE and R2 columns.

With the model type 3-D **graphic setting** and in turning mode you also see the indexable inserts of the turning tools from **toolturn.trn**.

The TNC will not show a graphic if

- the current program has no valid workpiece blank definition
- no program is selected
- if the BLK FORM block was not yet executed during the workpiece blank definition with the aid of a subprogram

> The simulation of programs with 5-axis machining or tilted machining might run at reduced speed. With the MOD menu **Graphic settings** you and decrease the **model quality** and in that way increase the speed of simulation.

Speed of the setting test runs

The most recently set speed stays active until a power interruption. After the control is switched on the speed is set to FMAX.

After you have started a program, the TNC displays the following soft keys with which you can set the simulation speed:

Soft key	Functions
	Perform the test run at the same speed at which the program will be run (programmed feed rates are taken into account)
	Increase the simulation speed incrementally
	Decrease the simulation speed incrementally
	Test run at the maximum possible speed (default setting)

You can also set the simulation speed before you start a program:

- Select the function for setting the simulation speed

- Select the desired function by soft key, e.g. incrementally increasing the simulation speed

Overview: Display modes

In the **Program Run, Single Block** and **Program Run, Full Sequence** operating modes as well as in the **Test Run** operating mode, the TNC displays the following soft keys:

Soft key	View
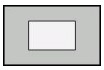	Plan view
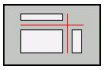	Projection in three planes
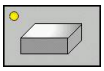	3-D view

> The position of the soft keys depends on the selected operating mode.

The **Test Run** operating mode additionally offers the following views:

Soft key	View
	Volume view
	Volume view and tool paths
	Tool paths

Limitations during program run

> The result of the simulation can be faulty if the TNC's computer is overloaded with complicated processing tasks.

3-D view

Choose 3-D view:

The high-resolution 3-D view enables you to display the surface of the machined workpiece in greater detail. With a simulated light source, the TNC creates realistic light and shadow conditions.

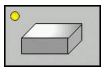

- Press the 3-D view soft key

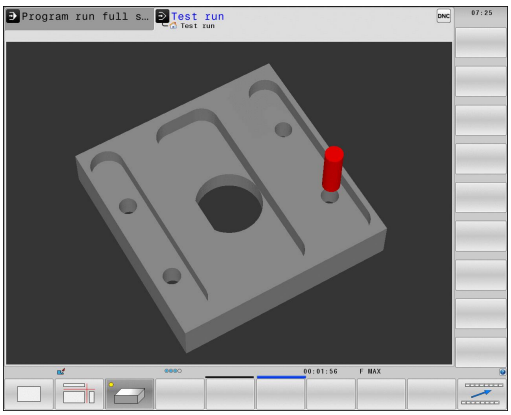

Rotating, enlarging, reducing and shifting the 3-D view

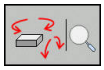

- Select the functions for rotating and enlarging/reducing: The TNC displays the following soft keys:

Soft keys	Function
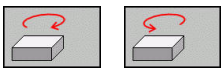	Rotate in 5° steps about the vertical axis
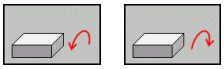	Tilt in 5° steps about the horizontal axis
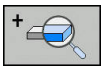	Enlarge the graphic stepwise
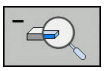	Reduce the graphic stepwise
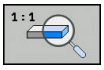	Reset the graphic to its original size and angle

- Scroll through the soft-key row

Soft keys	Function
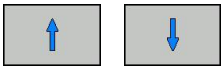	Move the graphic upward or downward
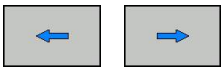	Move the graphic to the left or right
	Reset the graphic to its original position and angle

You can also use the mouse to change the graphic display. The following functions are available:

- In order to rotate the model shown in three dimensions, hold down the right mouse button and move the mouse. If you simultaneously press the shift key, you can only rotate the model horizontally or vertically
- To shift the model shown: Hold the center mouse button or mouse wheel down and move the mouse. If you simultaneously press the shift key, you can only shift the model horizontally or vertically
- To zoom in on a certain area: Mark a zoom area by holding the left mouse button down. After you release the left mouse button, the TNC zooms in on the defined area
- To rapidly magnify or reduce any area: Rotate the mouse wheel backwards or forwards
- To return to the standard display: Press the shift key and simultaneously double-click with the right mouse key. The rotation angle is maintained if you only double-click with the right mouse key

3-D view in the Test Run operating mode

The **Test Run** operating mode additionally offers the following views:

Soft keys	Function
VIEWS	Volume view
VIEWS	Volume view and tool paths
VIEWS	Tool paths

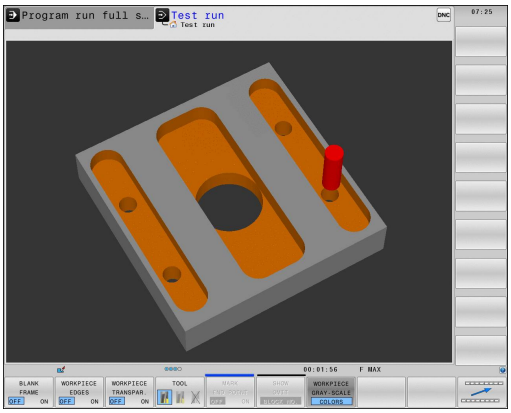

The **Test run** operating mode additionally offers the following functions:

Soft keys	Function
BLANK FRAME OFF ON	Show workpiece blank frame
WORKPIECE EDGES OFF ON	Highlight workpiece edges on 3-D model
WORKPIECE TRANSPAR. OFF ON	Show a transparent workpiece
MARK END POINT OFF ON	Show the end points of the tool paths
BLOCK NUMBERS OFF ON	Show the block numbers of the tool paths
WORKPIECE GRAY-SCALE COLORS	Show the workpiece in color

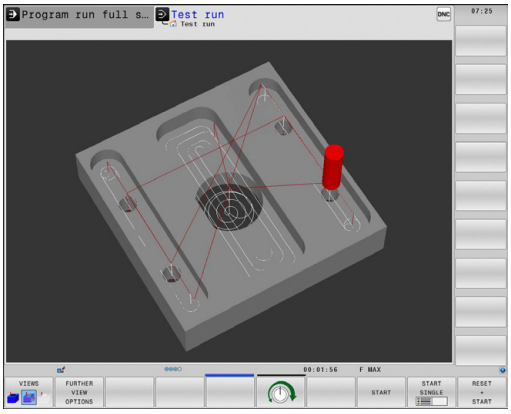

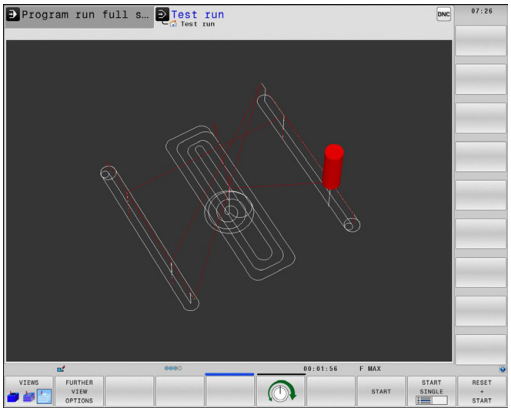

Note that the range of functions depends on the model quality selected. You can select the model quality in the MOD function **Graphic settings**.

By showing the tool paths you can depict the programmed paths of the TNC in three dimensions. A powerful zoom function is available for recognizing the details quickly.

You can use the tool paths display to inspect programs created externally for irregularities before machining. This can help you to avoid undesirable machining marks on the workpiece. If points were output wrongly by the the postprocesssor, machining marks may arise.

The TNC shows traverse movements in rapid traverse in red.

Plan view

Select the plan view in the **Test Run** operating mode:

- Press the **FURTHER VIEW OPTIONS** soft key

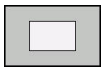

- Press the **PLAN VIEW** soft key

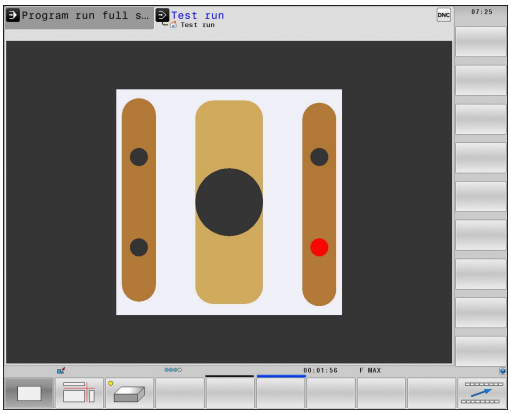

Select the plan view in the **Program Run, Single Block** and **Program Run, Full Sequence** operating modes:

- Press the **GRAPHICS** soft key

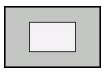

- Press the **PLAN VIEW** soft key

Projection in three planes

The simulation shows three sectional planes and a 3-D model, similar to a technical drawing.

Select projection in three planes in the **Test Run** operating mode:

- Press the **FURTHER VIEW OPTIONS** soft key

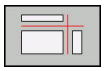

- Press the **VIEW ON 3 PLANES** soft key

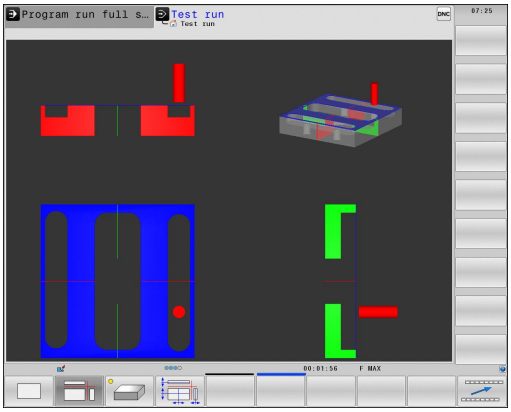

Select projection in three planes in the **Program Run, Single Block** and **Program Run, Full Sequence** operating modes:

- Press the **GRAPHICS** soft key

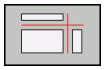

- Press the **VIEW ON 3 PLANES** soft key

Move the sectional planes

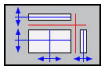

- Select the functions for shifting the sectional plane. The TNC offers the following soft keys:

Soft keys	Function
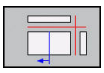 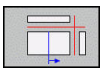	Shift the vertical sectional plane to the right or left
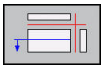 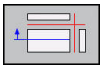	Shift the vertical sectional plane forward or backward
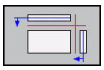 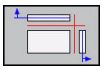	Shift the horizontal sectional plane upwards or downwards

The position of the sectional planes is visible during shifting.

The default setting of the sectional plane is selected so that it lies in the working plane in the workpiece center and in the tool axis on the top surface.

Return sectional planes to default setting:

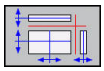

- Select the function for resetting the sectional planes.

Repeating graphic simulation

A part program can be graphically simulated as often as desired. To do so you can reset the graphic to the workpiece blank.

Soft key	Function
RESET BLK FORM	Show the unmachined workpiece blank

Tool display

Regardless of the operating mode, you can also show the tool during the simulation.

Soft key	Function
TOOLS DISPLAY HIDE	**Program Run, Full Sequence / Program Run, Single Block**
TOOL	**Test Run**

Measurement of machining time

Machining time in the Test Run mode of operation

The control calculates the duration of the tool movements and displays this as machining time in the test run. The control takes feed movements and dwell times into account.

The time calculated by the control can only conditionally be used for calculating the production time because the control does not account for machine-dependent times, such as tool change.

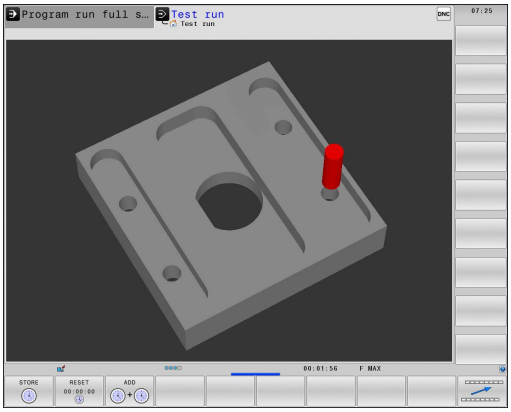

> The machining times shown for milling/turning operations in the simulation do not correspond to the actual machining times.

Machining time in the machine operating modes

Time display from program start to program end. The timer stops whenever machining is interrupted.

Activating the stopwatch function

- Shift the soft-key row until the soft-key for the stopwatch functions appears

- Select the stopwatch functions

- Select the desired function via soft key, e.g. saving the displayed time

Soft key	Stopwatch functions
	Store displayed time
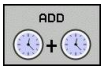	Display the sum of stored time and displayed time
	Clear displayed time

17.2 Showing the workpiece blank in the working space

Application

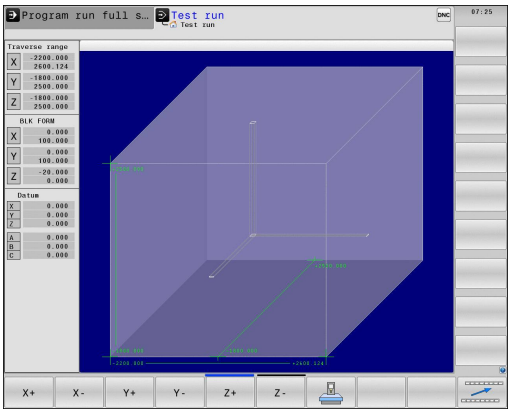

In the **Test run** operating mode, you can graphically check the position of the workpiece blank or datum in the machine's working space and activate work space monitoring in the **Test run** mode: Press the **BLANK IN WORK SPACE** soft key to activate this function. You can use the soft key **SW LIMIT MONITORING** (second soft-key row) to activate or deactivate the function.

A transparent cuboid represents the workpiece blank. Its dimensions are shown in the **BLK FORM** table. The TNC takes the dimensions from the workpiece blank definition of the selected program. The workpiece blank cuboid defines the input coordinate system. Its datum lies within the traverse-range cuboid.

For a test run it normally does not matter where the workpiece blank is located within the working space. If you activate working space monitoring, you must graphically shift the workpiece blank so that it lies within the working space. Use the soft keys shown in the table.

You can also activate the current datum for the **Test run** operating mode.

Soft keys		Function
X+	X-	Shift workpiece blank in positive/negative X direction
Y+	Y-	Shift workpiece blank in positive/negative Y direction
Z+	Z-	Shift workpiece blank in positive/negative Z direction
		Show workpiece blank referenced to the set datum
SW limit monitoring		Switch monitoring function on or off

Note that even with **BLK FORM CYLINDER**, a cuboid is shown in the working space as workpiece blank.

When **BLK FORM ROTATION** is used, no workpiece blank is shown in the working space.

17.3 Functions for program display

Overview

In the **Program run single block** and **Program run full sequence** operating mode, the TNC displays the following soft keys for displaying a machining program in pages:

Soft key	Functions
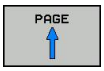	Go back one screen of the program
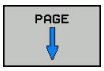	Go forward one screen of the program
	Select start of program
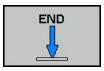	Select end of program

17.4 Test run

Application

In the **Test run** operating mode, you can simulate programs and program sections to reduce programming errors when programs are running. The TNC checks the programs for the following:

- Geometrical incompatibilities
- Missing data
- Impossible jumps
- Violation of the machine's working space

The following functions are also available:

- Blockwise test run
- Interruption of test at any block
- Optional block skip
- Functions for graphic simulation
- Measure machining time
- Additional status display

Danger of collision!

The TNC cannot graphically simulate all traverse motions actually performed by the machine. These include

- Traverse motions during tool change, if the machine manufacturer defined them in a tool-change macro or via the PLC
- Positioning movements that the machine manufacturer defined in an M-function macro
- Positioning movements that the machine manufacturer performs via the PLC

HEIDENHAIN therefore recommends proceeding with caution for every new program, even when the program test did not output any error message, and no visible damage to the workpiece occurred.

With cuboid workpiece blanks, the TNC starts a program test run after a tool call at the following position:

- In the working plane in the center of the defined **BLK FORM**
- In the tool axis, 1 mm above the **MAX** point defined in the **BLK FORM**

With rotationally symmetric workpiece blanks, the TNC starts a program test run after a tool call at the following position:

- In the machining plane at the position X=0, Y=0
- In the tool axis 1 mm above the defined workpiece blank

In order to ensure unambiguous behavior during program run, after a tool change you should always move to a position from which the TNC can position the tool for machining without causing a collision.

Your machine tool builder can also define a tool-change macro for the **Test Run** operating mode. This macro will simulate the exact behavior of the machine. Refer to your machine manual.

Execute test run

If the central tool file is active, a tool table must be active (status S) to conduct a test run. Select a tool table via the file manager in the **Test Run** mode of operation.

For turning tools you can select a turning tool table with the extension .trn, which is compatible with the selected tool table. This means that the turning tools must match in both selected tables.

You can select any preset table (status S) for the test run.

After **RESET + START**, line 0 of the temporarily loaded preset table automatically displays the momentarily active datum from **Preset.pr** (execution). Line 0 is selected when starting the test run until you define another datum in the NC program. All datums from lines > 0 are read by the control from the selected preset table of the test run.

With the **BLANK IN WORKING SPACE** function, you activate working space monitoring for the test run.

Further Information: Showing the workpiece blank in the working space , page 577

- Select the **Test Run** operating mode
- Call the file manager with the **PGM MGT** key and select the file you wish to test

The TNC then displays the following soft keys:

Soft key	Functions
RESET + START	Reset the blank form and test the entire program
START	Test the entire program
START SINGLE	Test each NC block individually
STOP	Halt test run (soft key only appears once you have started the test run)

You can interrupt the test run and continue it again at any point —even within a fixed cycle. In order to continue the test, the following actions must not be performed:

- Selecting another block with the arrow keys or the **GOTO** key
- Making changes to the program
- Selecting a new program

17.5 Program run

Application

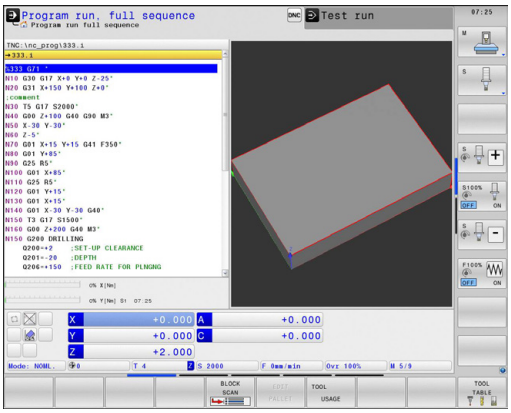

In the **Program run, full sequence** operating mode, the TNC executes a machining program continuously to its end or up to a program stop.

In the **Program run, single block** operating mode, the TNC executes each block individually after pressing the **NC START** key. With point pattern cycles and **G79 PAT**, the control stops after each point.

You can use the following TNC functions in the and operating modes:

- Interrupt program run
- Start the program run from a certain block
- Optional block skip
- Edit the tool table TOOL.T
- Checking and changing Q parameters
- Superimpose handwheel positioning
- Functions for graphic simulation
- Additional status display

Running a part program

Preparation

1 Clamp the workpiece to the machine table.
2 Set the datum
3 Select the necessary tables and pallet files (status M)
4 Select the part program (status M)

You can change the feed rate and spindle speed using the potentiometers.

If you want to retract the NC Program, you can reduce the feed rate using the **FMAX** soft key. The reduction applies to all infeed and feed rate movements. The value you enter is no longer in effect after the machine has been turned off and on again. In order to re-establish the respective specified maximum feed rate after switch-on, you need to re-enter the corresponding value.

The behavior of this function varies depending on the respective machine. Refer to your machine manual.

Program Run, Full Sequence

- Start the machining program with the **NC START** key

Program Run, Single Block

- Start each block of the machining program individually with the **NC START** key

Interrupt machining

There are several ways to interrupt a program run:

- Program-controlled interruptions
- Manual interruption

The control shows the current status of the program run in the status display:

Icon	Meaning
	Program run has started
	Program has been interrupted
	Program run is stopped

The difference between an interrupted program run and a stopped run is that an interrupted run allows the user to carry out the following actions:

- Select operating mode
- Change Q parameters using the **Q INFO** function
- Change setting for the optional programmed interruption with **M1**
- Change setting for the programmed skipping of NC blocks with **/**

> The miscellaneous functions **M2** and **M30** plus functions **NC STOP** and **INTERNAL STOP** do not suspend the program run, they stop it altogether.
>
> If the control registers an error during a program run, it automatically stops the machining process.

Program-controlled interruptions

You can define interruptions directly in the machining program. The control interrupts the program run in the NC Block containing one of the following inputs:

- Programmed stop **G38** (with and without miscellaneous function)
- Programmed stop **M0**
- Conditional stop **M1**

> The miscellaneous function **M6** may also lead to a suspension of the program run. The machine manufacturer sets the functional scope of the miscellaneous functions.

Manual interruption

During a machining program in **Program Run, Full Sequence** operating mode, select the **Program Run, Single Block** operating mode. The control interrupts the machining process at the end of the current machining step.

Stop and exit machining

- Press **NC STOP** key

- > The control does not exit the current NC block
- > The control shows the symbol for stopped status in the status display
- > Actions such as a change of operating mode are not available
- > The program can be resumed with the **NC START** key

- Press the **INTERNAL STOP** soft key

- > The control briefly shows the symbol for aborting the program in the status display

- > The control shows the symbol for the exited inactive status in the status display
- > Actions such as a change of operating mode are available again

Moving the machine axes during an interruption

You can move the machine axes during an interruption in the same way as in the **Manual operation** mode.

Danger of collision!

If you interrupt program run while the working plane is tilted, you can switch the coordinate system between tilted and non-tilted, as well as to the active tool axis direction, by pressing the **3-D ROT** soft key.

The functions of the axis direction keys, the electronic handwheel and the positioning logic for returning to the contour are evaluated by the TNC. When retracting the tool, make sure the correct coordinate system is active and the angular values of the tilt axes are entered in the 3-D ROT menu, if necessary.

Example:
Retracting the spindle after tool breakage

- Interrupt machining
- Enable the axis direction keys: Press the **MANUAL TRAVERSE** soft key
- Move the machine axes with the axis direction keys

On some machines, after pressing the **MANUAL TRAVERSE** soft key you may have to press the **NC START** key to enable the axis direction keys. Refer to your machine manual.

Resuming program run after an interruption

> If you have to interrupt an NC program using the **INTERNAL STOP** key, you have to start machining at the start of the program or using the **BLOCK SCAN** function.
>
> In machining cycles, block scan always takes place at the start of the cycle. If you interrupt a program run during a machining cycle, the control repeats machining steps already carried out after a block scan.

If you interrupt the program run within a program section repetition, or within a subprogram, you must return to the interruption point using the **BLOCK SCAN** function.

When a program run is interrupted, the TNC stores:

- The data of the last defined tool
- Active coordinate transformations (e.g. datum shift, rotation, mirroring)
- The coordinates of the circle center that was last defined

> Note that the stored data remain active until they are reset (e.g. if you select a new program).

The stored data is used for returning the tool to the contour after manual machine axis positioning during an interruption (**RESTORE POSITION** soft key).

Resuming the program run with the NC Start key

You can resume program run by pressing the machine **START** button if the program was interrupted in one of the following ways:

- Press the **NC STOP** key
- Programmed interruption

Resuming program run after an error

With an erasable error message:

- ▶ Remove the cause of the error
- ▶ Clear the error message from the screen: Press the **CE** key
- ▶ Restart the program, or resume program run where it was interrupted

With an non-erasable error message

- ▶ Press and hold the **END** key for two seconds. This induces a TNC system restart
- ▶ Remove the cause of the error
- ▶ Restart

If you cannot correct the error, write down the error message and contact your service agency.

Retraction after a power interruption

The **Retraction** mode is enabled and adapted by the machine manufacturer. Refer to your machine manual.

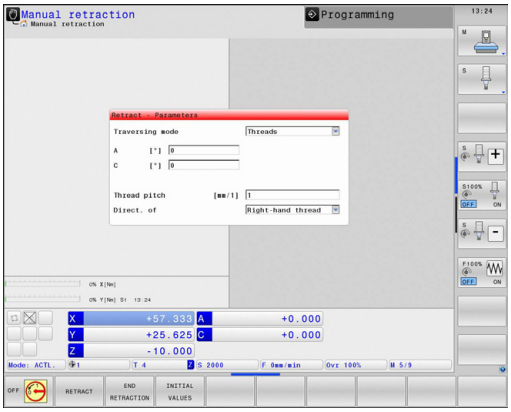

With the **Retraction** mode of operation you can disengage the tool from the workpiece after an interruption in power.

The **Retraction** mode of operation is selectable in the following conditions:

- Power interrupted
- No control voltage for the relay
- Traverse reference points

The **Retraction** operating mode offers the following modes of traverse:

Mode	Function
Machine axes	Movement of all axes in the original coordinate system
Tilted system	Movement of all axes in the active coordinate system Effective parameters: Position of the tilting axes
Tool axis	Movements of the tool axis in the active coordinate system
Thread	Movements of the tool axis in the active coordinate system with compensating movement of the spindle Effective parameters: Thread pitch and direction of rotation

If machining plane tilting (option number 8) is enabled on your TNC, then the **Tilted System** traverse mode is available.

The TNC selects the mode of traverse and the associated parameters automatically. If the traverse mode or the parameters were not correctly chosen, you can change them manually.

17.5 Program run

Danger of collision!

For nonreferenced axes, the TNC adopts the most recently saved axis values. Generally, these values do not correspond to the exact actual axis positions!

As a result, for example, the TNC might not move the tool exactly along the actual tool direction. If the tool is still in contact with the workpiece, it can cause stress or damage to the tool and workpiece. Stress or damage to a workpiece or tool can also be caused by uncontrolled coasting or braking of axes after a power failure. If the tool is still in contact with the workpiece, move the axes carefully. Set the feed rate override to the small values. If you use the handwheel, use a small feed rate factor.

The traverse range monitoring is not available for nonreferenced axes. Watch the axes while you are moving them. Do not move to the limits of traverse.

Example

The power failed while a thread cutting cycle in the tilted working plane was being performed. You have to retract the tap:

- Switch on the power supply for control and machine. The TNC starts the operating system. This process may take several minutes. Then the TNC will display the message "Power interrupted" in the screen header

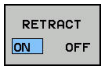

- Activate the **Retraction** mode: Press the **RETRACT** soft key. The TNC displays the message **RETRACT**

- Acknowledge the power interruption: Press the **CE** key. The TNC compiles the PLC program.

- Switch on machine control voltage: The TNC checks the emergency stop switch. If at least one axis is not referenced, then you must compare the displayed position values with the actual axis values and confirm a match and follow any instructions given in the dialog.

- Check the preselected traverse mode: If required, select **THREAD**
- Check the preselected thread pitch: If required, enter the thread pitch
- Check the pre-selected rotation direction: if necessary select the direction of rotation of the thread
  Right-handed thread: The spindle turns in clockwise direction when moving into the workpiece and counterclockwise when retracting Left-handed thread: The spindle turns in counterclockwise direction when moving into the workpiece and clockwise when retracting

- Activate retraction: Press the **RETRACT** soft key

- Retraction: Retract the tool with the axis direction keys or the electronic handwheel
  Axis key Z+: Retraction from the workpiece
  Axis key Z-: Moving into the workpiece

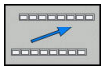

- Exit retraction: Return to the original soft-key level

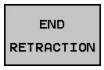

- End the **Retraction** mode: Press the **END RETRACTION** soft key. The TNC checks whether the **Retract** mode can be exited, following any instructions given in the dialog

- Answer the confirmation request: If the tool was not correctly retracted, press the **NO** soft key. If the tool was correctly retracted, press the **YES** soft key. The TNC hides the **Retraction Selected** dialog.
- Initialize the machine: if required, cross the datums
- Establish the desired machine condition: If required, reset the tilted working plane

Any entry into program (mid-program startup)

The **BLOCK SCAN** function must be enabled and adapted by the machine manufacturer. Refer to your machine manual.

With the **BLOCK SCAN** function you can start an NC program at any desired NC block. The control factors workpiece machining up to this NC block into the calculations.

Using the pallet management you can also use the **BLOCK SCAN** function in conjunction with pallet tables.

If you have interrupted n NC program with the **INTERNAL STOP** soft key, the TNC automatically offers the interrupted NC block as an entry point for mid-program startup. This also applies to program interruptions in external NC programs that have been called up and are not necessarily located in the directory of the NC program called up.

If you interrupt the processing of pallet tables, the control always suggests the first NC block of the interrupted NC program for the **BLOCK SCAN** function.

All required NC programs and tables must be selected in the **Program Run, Single Set** and **Program Run, Full Sequence** operating modes (status M) or called up from the NC program.

If the program contains a programmed interruption before the end of the block scan, the block scan is interrupted at this point. Press the **NC START** key to resume the block scan.

After a block scan, return the tool to the calculated position with **RESTORE POSITION**.

Tool data does not take effect until after the tool call and a subsequent positioning block.

The TNC skips all touch probe cycles in a mid-program startup. Result parameters that are written to from these cycles might therefore remain empty.

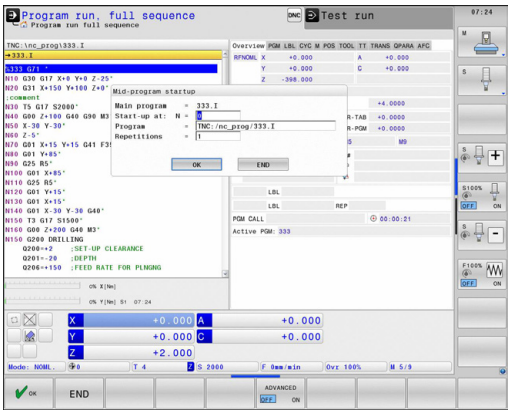

You may not use mid-program startup if the following occurs after a tool change in the machining program:

- The program is started in an FK sequence
- The stretch filter is activated
- The program is started in a threading cycle (cycles G84, G85, G206, G207 and G209) or the subsequent NC block
- Touch probe cycle G55 is used before the program start

- Go to the first block of the current program to start a block scan: Enter **GOTO** "0"

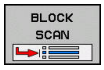

- Select block scan: Press the **BLOCK SCAN** soft key
- **Start-up at: N =** Enter the number of the NC block where the block scan ends
- **Program =** Check, input or select the name and path of the NC Program where the NC block is located using the **PGM MGT** key
- **Repetitions =** Enter the number of repetitions which should be taken into account in the block scan if the NC block is located within a program section repetition
- Confirm block scan: Press the **OK** soft key
- Start bock scan: Press the **NC START** key
- Approach the contour

With **BLOCK SCAN** in pallet tables, you must also define a **Line number =** in the respective field. The input refers to the line in the **NR** pallet table. This input is always required as an NC program may appear several times in a pallet table.

Entering a program with the GOTO key

If you use the **GOTO** key and the number of the NC block for going into a program, neither the TNC nor the PLC will execute any functions that ensure a safe start.

If you use the GOTO block number key for going into a subprogram,

- The TNC will skip the end of the subprogram ((**G98 L0**))
- the TNC will reset function M126 (Shorter-path traverse of rotary axes)

In such cases you must use the BLOCK SCAN function.

Returning to the contour

With the **RESTORE POSITION** function, the TNC returns to the workpiece contour in the following situations:

- Return to the contour after the machine axes were moved during a program interruption that was not performed with the **INTERNAL STOP** function
- Return to the contour after a block scan with **RESTORE POS AT N**, for example after an interruption with **INTERNAL STOP**
- Depending on the machine, if the position of an axis has changed after the control loop has been opened during a program interruption

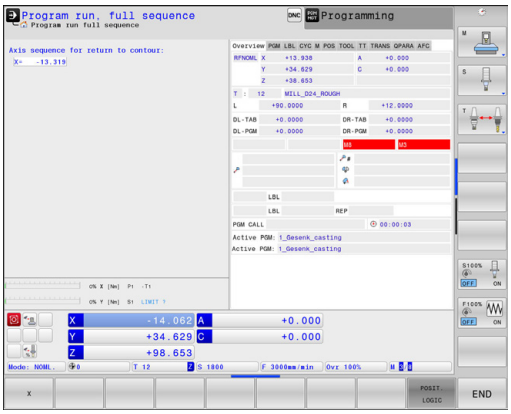

- ▶ To select a return to contour, press the **RESTORE POSITION** soft key
- ▶ Restore the machine status, if required
- ▶ To move the axes in the sequence that the TNC suggests on the screen: Press the **NC START** key; or
- ▶ To move the axes in any sequence: Press the **X**, **Z** etc. soft keys and activate with the **NC START** key in each case
- ▶ Resume operation: Press the **NC START** key

17.6 Automatic program start

Application

The TNC must be specially prepared by the machine tool builder for use of the automatic program start function. Refer to your machine manual.

Caution: Danger for the operator!

The autostart function must not be used on machines that do not have an enclosed working space.

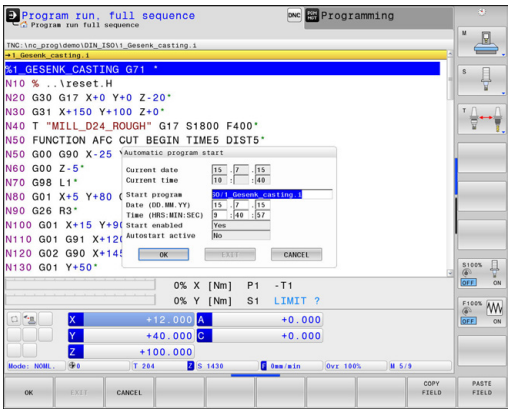

In a Program Run operating mode, you can use the **AUTOSTART** soft key to define a specific time at which the program that is currently active in this operating mode is to be started:

- Display window for setting the starting time
- **Time (hrs:min:sec):** Time of day at which the program is to be started
- **Date (DD.MM.YYYY):** Date on which the program is to be started
- To activate the start, press the **OK**

17.7 Optional block skip

Application

Blocks that you mark with a "/" sign may be skipped in **Test run** or **Program Run, Full Sequence/Single Block**:

- To run or test the program without the NC blocks preceded by a slash, set the soft key to **ON**

- To run or test the program with the NC blocks preceded by a slash, set the soft key to **OFF**

> This function does not work for **G99** blocks.
> After a power interruption the TNC returns to the most recently selected setting.

Inserting the "/" character

- In the **Programming** mode you select the block in which the character is to be inserted

- Select the **INSERT** soft key

Erasing the "/" character

- In the **Programming** mode you select the block in which the character is to be deleted

- Select the **REMOVE** soft key

17.8 Optional program-run interruption

Application

The behavior of this function varies depending on the respective machine.

Refer to your machine manual.

The TNC optionally interrupts program run at blocks containing M1. If you use M1 in the **Program Run** mode, the TNC does not switch off the spindle or coolant.

- Do not interrupt the **program run** or **test run** at blocks containing M1: Set the soft key to **OFF**

- Interrupt the **program run** or **test run** at blocks containing M1: Set the soft key to **ON**

18

MOD Functions

18.1 MOD function

The MOD functions provide additional input possibilities and displays. In addition you can enter code numbers to enable access to protected areas.

Selecting MOD functions

Open the pop-up window with the MOD functions:

MOD

- To select the MOD functions, press the **MOD** key. The TNC opens a pop-up window displaying the available MOD functions

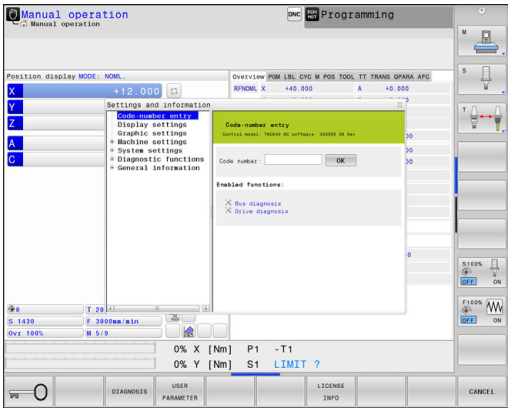

Changing the settings

As well as with the mouse, navigation with the keyboard is also possible in the MOD functions:

- Switch from the input area in the right window to the MOD function selections in the left window with the tab key
- Select MOD function
- Switch to the input field with the tab key or ENT key
- Enter value according to function and confirm with **OK** or make selection and confirm with **Apply**

> If more than one possibility is available for a particular setting, you can superimpose a window listing all of the given possibilities by pressing the **GOTO** key. Select the setting with the **ENT** key. If you don't want to change the setting, close the window again with the **END** key.

Exiting MOD functions

- Exit the MOD functions: Press the **END** soft key or the **END** key

Overview of MOD functions

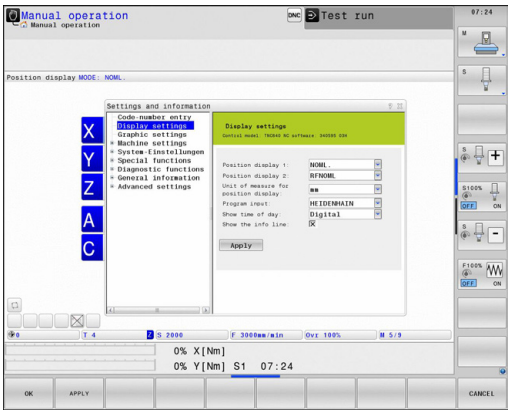

The following functions are available regardless of the selected operating mode:

Code-number entry

- Code number

Display settings

- Position displays
- Unit of measurement (mm/inches) for position display
- Program entry for MDI
- Show time of day
- Show the info bar

Graphic settings

- Model type
- Model quality

Machine settings

- Kinematics selection
- Tool-usage file
- External access

System settings

- Set the system time
- Define the network connection
- Network: IP configuration

Diagnostic functions

- Bus diagnosis
- Drive diagnosis
- HEROS information

General information

- Software version
- FCL information
- License information
- Machine times

18.2 Graphic settings

With the MOD function **Graphic settings**, you can select the model type and model quality.

To select the **graphic settings**, proceed as follows:

- In the MOD menu, select the **Graphic settings** group
- Select the model type
- Select the model quality
- Press **USE** soft key.
- Press the **OK** soft key.

You have the following simulation parameters for the graphic settings:

Model type

Displayed symbol	Choice	Properties	Application
	3-D	Very true to detail, heavy time and processor consumption	Milling with undercuts, milling-turning operations
	2.5 D	Fast	Milling without undercuts
	No model	Very fast	Line graphics

Model quality

Displayed symbol	Choice	Properties
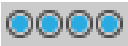	Very high	High data transfer rate, exact depiction of tool geometry, depiction of block end points and block numbers possible
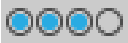	High	High data transfer rate, exact depiction of tool geometry
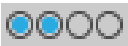	Medium	Medium data transfer rate, approximation of tool geometry
	Low	Low data transfer rate, coarse approximation of tool geometry

18.3 Machine settings

External access

The machine tool builder can configure the external access options. Refer to your machine manual.

Machine-dependent function: With the **TNCOPT** soft key, you can permit or lock access for an external diagnostics or commissioning program.

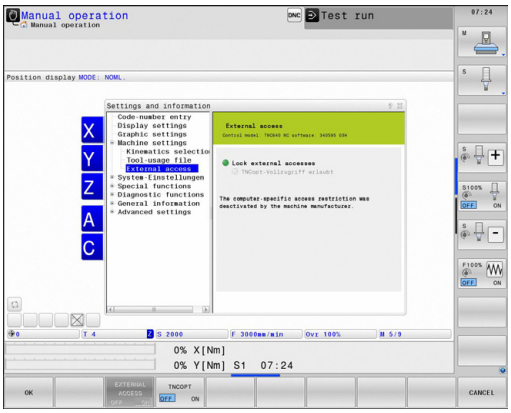

With the MOD function **External access** you can grant or restrict access to the TNC. If you have restricted the external access it is no longer possible to connect to the TNC and exchange data via a network or a serial connection, e.g. with the TNCremo data transfer software.

Restricting external access:

- In the MOD menu select the **Machine settings** group
- Select the **External access** menu
- Set the **EXTERNAL ACCESS ON/OFF** soft key to **OFF**
- Press the **OK** soft key

Computer-specific access control

If your machine manufacturer has set up computer-specific access control (machine parameter **CfgAccessCtrl** no. 123400), you can permit access for up to 32 connections authorized by you. Select **Add new** to create a new connection. The TNC opens an input window for you to enter the connection data.

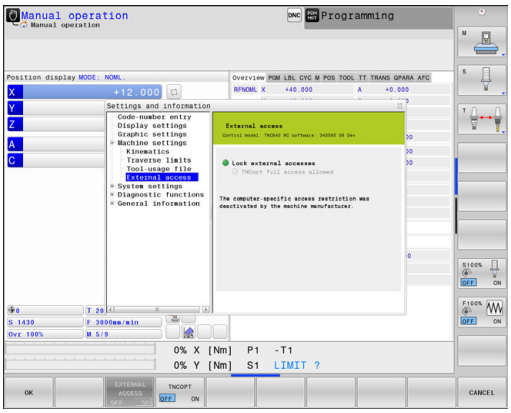

Access settings	
Host name	Host name of the external computer
Host IP	Network address of the external computer
Description	Additional information (text is shown in the overview list)
Type:	
Ethernet	Network connection
Com 1	Serial interface 1
COM 2	Serial interface 2
Access rights:	
Inquire	The TNC opens a query dialog with external access
Deny	Do not permit network access
Permit	Permit network access without query
Only machine manufacturer	Connection possible only when a code number is entered (machine tool builder)

If you assign the access right **Query** to a connection and access is implemented from this address, the TNC opens a pop-up window. You must permit or deny external access in the pop-up window:

External access	**Permission**
Yes	Permit once
Always	Permit continuously
Never	Deny continuously
No	Deny once

In the overview list an active connection is shown with a green symbol.

Connections without access rights are shown gray in the overview list.

Entering traverse limits

The **Traverse limits** function must be enabled and adapted by the machine tool builder.

Refer to your machine manual.

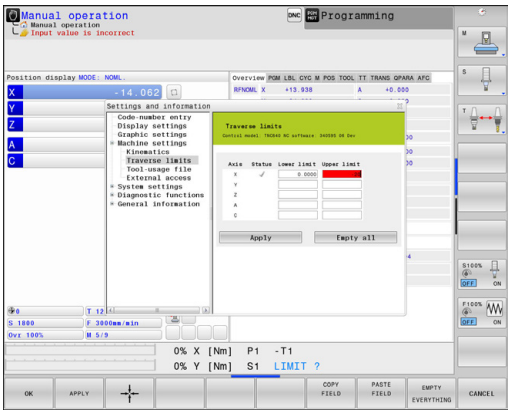

The MOD function **Traverse limits** enables you to limit the actually usable tool path within the maximum traverse range. This enables you to define protection zones on each axis to protect a component from collision for example.

To enter traverse limits:

- In the MOD menu select the **Machine settings** group
- Select the **Traverse limits** menu
- Enter the values of the desired axes as a reference value or load the momentary position with the **ACTUAL POSITION CAPTURE** soft key
- Press the **APPLY** soft key. The TNC checks the values entered for validity.
- Press the soft key **OK**

The protection zone becomes active automatically as soon as you set a valid limit in an axis. Settings are kept even after restarting the control.

You can only deactivate the protection zone by deleting all values or pressing the **EMPTY EVERYTHING** soft key.

Tool usage file

The tool usage test function must be enabled by your machine manufacturer. Refer to your machine manual.

With the MOD function **Tool usage file** you can select whether the TNC never, once, or always uses a tool usage file.

To generate a tool usage file:

- In the MOD menu select the **Machine settings** group
- Select the **Tool usage file** menu
- Select the desired setting for the **Program Run, Full Sequence/ Single Block** and **Test Run** operating modes
- Press the **APPLY** soft key
- Press the **OK** soft key

Select kinematics

The **Select Kinematics** function must be enabled and adapted by the machine manufacturer.

Refer to your machine manual.

You can use this function to test programs whose kinematics does not match the active machine kinematics. If your machine manufacturer saved different kinematic configurations in your machine, you can activate one of these kinematics configurations with the MOD function. When you select a kinematics model for the test run this does not affect machine kinematics.

Danger of collision!

When you switch the kinematics model for machine operation, the TNC implements all of subsequent movements with modified kinematics.

Ensure that you have selected the correct kinematics in the test run for checking your workpiece.

18.4 System settings

Set the system time

With the **Set system time** MOD function you can set the time zone, data and time manually or with the aid of an NTP server synchronization.

To set the system time manually:

- In the MOD menu, select the **System settings** group
- Press the **SET DATE/TIME** soft key
- Select your time zone in the **Time zone** area
- Press the **LOCAL/NTP** soft key in order to select the **Set time manually** entry
- If required, change the datum and the time
- Press the **OK** soft key

To set the system time with the aid of an NTP server:

- In the MOD menu, select the **System settings** group
- Press the **SET DATE/TIME** soft key
- Select your time zone in the **Time zone** area
- Press the **LOCAL/NTP** soft key in order to synchronize the time entry through the NTP server
- Enter the host name or the URL of an NTP server
- Press the **ADD** soft key
- Press the **OK** soft key

18.5 Select the position display

Application

In the **Manual Operation** mode and the **Program Run, Full Sequence** and **Program Run, Single Block** modes of operation, you can select the type of coordinates to be displayed:

The figure on the right shows the different tool positions

- Initial position
- Target position of the tool
- Workpiece datum
- Machine datum

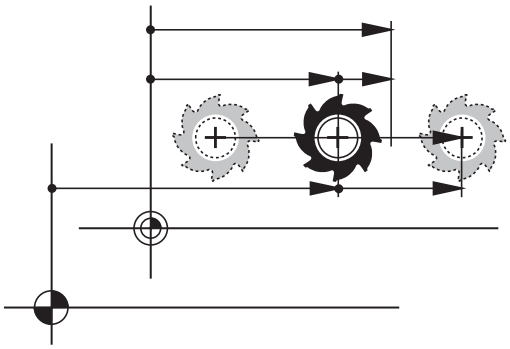

The TNC position displays can show the following coordinates:

Function	Display
Nominal position: the value presently commanded by the TNC	NOML.
Actual position; current tool position	ACTL.
Reference position; the actual position relative to the machine datum	REF ACTL
Reference position; the nominal position relative to the machine datum	REF NOML
Servo lag; difference between nominal and actual positions (following error)	LAG
Distance remaining to the programmed position in the input system; difference between actual and target positions	ACTDST
Distance remaining to the programmed position with reference to the machine datum; difference between reference and target positions	REFDST
Traverses that were carried out with handwheel superimpositioning (M118)	M118

With the MOD function **Position display 1**, you can select the position display in the status display.

With the MOD function **Position display 2**, you can select the position display in the additional status display.

18.6 Setting the unit of measure

Application

This MOD function determines whether the coordinates are displayed in millimeters (metric system) or inches.

- Metric system: e.g. X = 15.789 (mm), the value is displayed to 3 decimal places
- Inch system: e.g. X = 0.6216 (inches), value is displayed to 4 decimal places

If you would like to activate the inch display, the TNC shows the feed rate in inch/min. In an inch program you must enter the feed rate larger by a factor of 10.

18.7 Displaying operating times

Application

The **MACHINE TIME** MOD function enables you to see various types of operating times:

Operating time	Meaning
Control on	Operating time of the control since being put into service
Machine on	Operating time of the machine tool since being put into service
Program run	Duration of controlled operation since being put into service

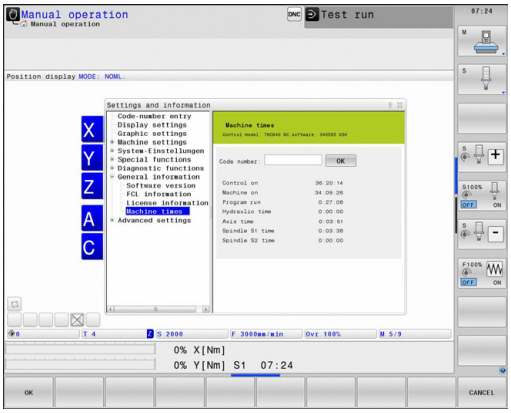

The machine tool builder can provide further operating time displays. Refer to your machine manual.

18.8 Software numbers

Application

The following software numbers are displayed on the TNC screen after the **Software version** MOD function has been selected:

- **Control model**: Designation of the control (managed by HEIDENHAIN)
- **NC SW**: Number of the NC software (managed by HEIDENHAIN)
- **NCK**: Number of the NC software (managed by HEIDENHAIN)
- **PLC**: Number or name of the PLC software (managed by your machine manufacturer)

Your machine manufacturer can add further software numbers, e.g. from a connected camera.

In the **FCL Information** MOD function, the TNC shows the following information:

- **Development level (FCL=Feature Content Level):** Development level of the software installed on the control **Further Information:** Feature Content Level (upgrade functions), page 11

18.9 Entering the code number

Application

The TNC requires a code number for the following functions:

Function	Code number
Select user parameters	123
Configuring an Ethernet card	NET123
Enabling special functions for Q parameter programming	555343

18.10 Setting up data interfaces

Serial interfaces on the TNC 640

The TNC 640 automatically uses the LSV2 transmission protocol for serial data transfer. The LSV2 protocol is fixed as a default and cannot be changed except for setting the baud rate (machine parameter **baudRateLsv2**, no. 106606). You can also specify another type of transmission (interface). The settings described below are therefore effective only for the respective newly defined interface.

Application

To set up a data interface, select the file manager (PGM MGT) and press the **MOD** key. Press the **MOD** key again and enter the code number 123. The TNC shows the user parameter **GfgSerialInterface** (no. 106700), in which you can enter the following settings:

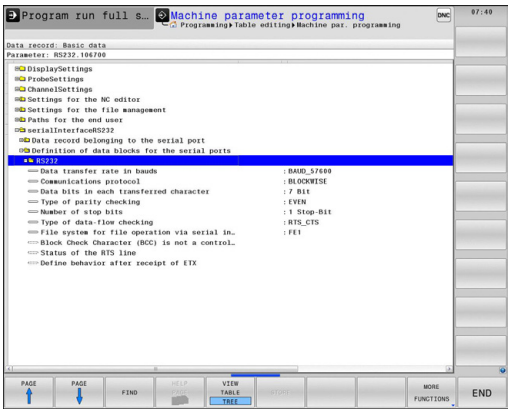

Setting the RS-232 interface

Open the RS232 folder. The TNC then displays the following settings:

Set BAUD RATE (baud rate no. 106701)

You can set the BAUD RATE (data transfer speed) from 110 to 115 200 baud.

Set protocol (protocol no. 106702)

The data transfer protocol controls the data flow of a serial transmission (comparable to MP5030 of the iTNC 530).

> Here, the BLOCKWISE setting designates a form of data transfer where data is transmitted in blocks. This is not to be confused with the blockwise data reception and simultaneous blockwise processing by older TNC contouring controls. Blockwise reception of an NC program and simultaneous machining of the program is not possible!

Data transmission protocol	Selection
Standard data transmission (transmission line-by-line)	STANDARD
Packet-based data transfer	BLOCKWISE
Transmission without protocol (only character-by-character)	RAW_DATA

Set data bits (dataBits no. 106703)

By setting the data bits you define whether a character is transmitted with 7 or 8 data bits.

Check parity (parity no. 106704)

The parity bit helps the receiver to detect transmission errors. The parity bit can be formed in three different ways:

- No parity (NONE): There is no error detection
- Even parity (EVEN): Here there is an error if the receiver finds that it has received an odd number of set bits
- Odd parity (ODD): Here there is an error if the receiver finds that it has received an even number of set bits

Set stop bits (stopBits no. 106705)

The start bit and one or two stop bits enable the receiver to synchronize each transmitted character during serial data transmission.

Set handshake (flowControl no. 106706)

By handshaking, two devices control data transfer between them. A distinction is made between software handshaking and hardware handshaking.

- No data flow checking (NONE): Handshaking is not active
- Hardware handshaking (RTS_CTS): Transmission stop is active through RTS
- Software handshaking (XON_XOFF): Transmission stop is active through DC3 (XOFF)

File system for file operation (fileSystem no. 106707)

In **fileSystem** you define the file system for the serial interface. This machine parameter is not required if you don't need a special file system.

- EXT: Minimum file system for printers or non-HEIDENHAIN transmission software. Corresponds to the EXT1 and EXT2 modes of earlier TNC controls.
- FE1: Communication with the TNCserver PC software or an external floppy disk unit.

Block check character (bccAvoidCtrlChar no. 106708)

With Block Check Character (optional) no control character, you determine whether the checksum can correspond to a control character.

- TRUE: The checksum does not correspond to a control character
- FALSE: The checksum can correspond to a control character

Condition of RTS line (rtsLow no. 106709)

With Condition of RTS line (optional) you determine whether the "low" level is active in idle state.

- TRUE: Level is "low" in idle state
- FALSE: Level is not "low" in idle state

Define behavior after receipt of ETX (noEotAfterEtx no. 106710)

With define behavior after reception of ETX (optional) you determine whether the EOT character is sent after the ETX character was received.

- TRUE: The EOT character is not sent
- FALSE: The EOT character is sent

Settings for the transmission of data using PC software TNCserver

Apply the following settings in machine parameter **RS232** (no. 106700):

Parameters	Selection
Data transfer rate in baud	Has to match the setting in TNCserver
Data transmission protocol	BLOCKWISE
Data bits in each transferred character	7 bits
Type of parity checking	EVEN
Number of stop bits	1 stop bit
Specify type of handshake:	RTS_CTS
File system for file operations	FE1

Setting the operating mode of the external device (fileSystem)

> The functions "Transfer all files," "Transfer selected file," and "Transfer directory" are not available in the FE2 and FEX modes.

Icon	External device	Operating mode
	PC with HEIDENHAIN TNCremo data transfer software	LSV2
	HEIDENHAIN floppy disk units	FE1
	Non-HEIDENHAIN devices such as printers, scanners, punchers, PC without TNCremo	FEX

Data transfer software

For transmitting files to and from the TNC, we recommend using the HEIDENHAIN TNCremo data transmission software. With TNCremo, data transmission is possible with all HEIDENHAIN controls via the serial interface or the Ethernet interface.

> You can download the current version of TNCremo free of charge from the HEIDENHAIN Filebase (www.heidenhain.de, <Documentation and Information>, <Software>, <Download area>, <PC Software>, <TNCremo>).

System requirements for TNCremo:

- PC with 486 processor or higher
- Windows XP, Windows Vista, Windows 7, Windows 8 operating system
- 16 MB RAM
- 5 MB free memory space on your hard disk
- An available serial interface or connection to the TCP/IP network

Installation under Windows

- Start the SETUP.EXE installation program with the file manager (Explorer)
- Follow the setup program instructions

Starting TNCremo under Windows

- Click on <Start>, <Programs>, <HEIDENHAIN Applications>, <TNCremo>

When you start TNCremo for the first time, TNCremo automatically tries to set up a connection with the TNC.

Data transfer between the TNC and TNCremo

> Before you transmit a program from the TNC to the PC, you must make absolutely sure that you have already saved the program currently selected on the TNC. The TNC saves changes automatically when you switch the operating mode on the TNC, or when you select the file manager with the **PGM MGT** key.

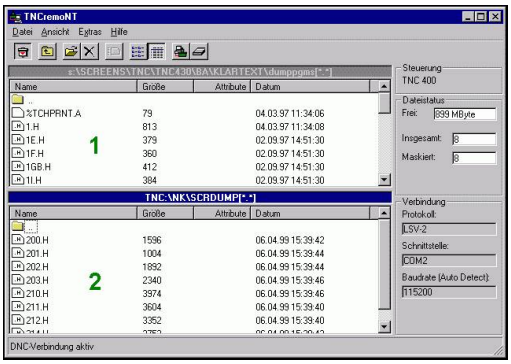

Check whether the TNC is connected to the correct serial port on your PC or to the network.

Once you have started TNCremo, you will see a list of all files that are stored in the active directory in the upper section of the main window **1**. Using <File>, <Change directory>, you can select any drive or another directory on your PC.

If you want to control data transfer from the PC, establish the connection with your PC in the following manner:

- Select <File>, <Setup connection>. TNCremo now receives the file and directory structure from the TNC and displays this at the bottom left of the main window **2**
- To transfer a file from the TNC to the PC, select the file in the TNC window with a mouse click and drag and drop the highlighted file into the PC window **1**
- To transfer a file from the PC to the TNC, select the file in the PC window with a mouse click and drag and drop the highlighted file into the TNC window **2**

If you want to control data transfer from the TNC, establish the connection with your PC in the following manner:

- Select <Extras>, <TNCserver>. TNCremo is now started in server mode, and can receive data from the TNC and send data to the TNC
- You can now call the file management functions on the TNC by pressing the key **PGM MGT** in order to transfer the desired files **Further Information:** Data transfer to or from an external data carrier, page 140

End TNCremo

Select <File>, <Exit>

> Refer also to the TNCremo context-sensitive help texts where all of the functions are explained in more detail. The help texts must be called with the **F1** key.

18.11 Ethernet interface

Introduction

The TNC is shipped with a standard Ethernet card to connect the control as a client in your network. The TNC transmits data via the Ethernet card with

- the **smb** protocol (Server Message Block) for Windows operating systems, or
- the **TCP/IP** protocol family (Transmission Control Protocol/ Internet Protocol) and with support from the NFS (Network File System)

Connection options

You can connect the Ethernet card in your TNC to your network through the RJ45 connection (X26, 100BaseTX or 10BaseT), or directly to a PC. The connection is metallically isolated from the control electronics.

For a 100BaseTX or 10BaseT connection you need a Twisted Pair cable to connect the TNC to your network.

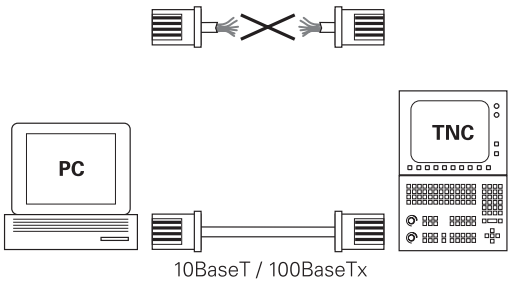

> The maximum cable length between TNC and a node depends on the quality grade of the cable, the sheathing and the type of network (100BaseTX or 10BaseT).
>
> No great effort is required to connect the TNC directly to a PC that has an Ethernet card. Simply connect the TNC (port X26) and the PC with an Ethernet crossover cable (trade names: crossed patch cable or STP cable).

Configuring the TNC

> Make sure that the person configuring your TNC is a network specialist.

- Press the **MOD** key in the **Programming** mode and enter the code number NET123
- In the file manager, press the soft key **NET**

General network settings

- Press the **CONFIGURE NETWORK** soft key to enter the general network settings. The **Computer name** tab is active:

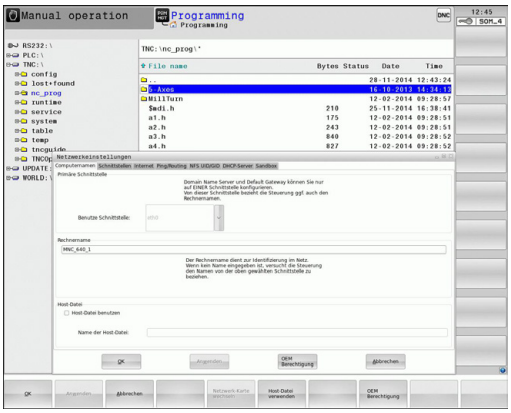

Setting	Meaning
Primary interface	Name of the Ethernet interface to be integrated in your company network. Only active if a second, optional Ethernet interface is available on the control hardware
Computer name	Name displayed for the TNC in your company network
Host file	**Only required for special applications**: Name of a file in which the assignments of IP addresses to computer names is defined

- Select the **Interfaces** tab to enter the interface settings:

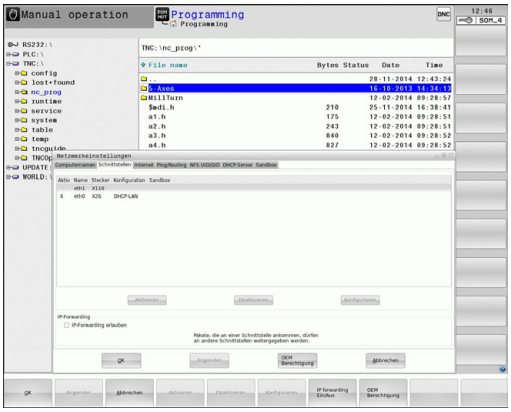

Setting	Meaning
Interface list	List of the active Ethernet interfaces. Select one of the listed interfaces (via mouse or arrow keys) ■ **Activate** button: Activate the selected interface (an **X** appears in the **Active** column) ■ **Deactivate** button: Deactivate the selected interface (**-** in the **Active** column) ■ **Configuration** button: Open the configuration menu
Allow IP forwarding	**This function must be kept deactivated**. Only activate this function if external access via the second, optional Ethernet interface of the TNC is necessary for diagnostic purposes. Only do so after instruction by our Service Department

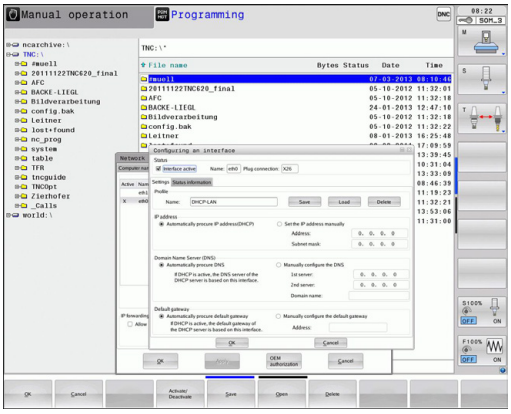

- Press the **Configuration** button to open the Configuration menu:

Setting	Meaning
Status	■ **Active interface**: Connection status of the selected Ethernet interface ■ **Name**: Name of the interface you are currently configuring ■ **Plug connection**: Number of the plug connection of this interface on the logic unit of the control
Profile	Here you can create or select a profile in which all settings shown in this window are stored. HEIDENHAIN provides two standard profiles: ■ **DHCP-LAN**: Settings for the standard TNC Ethernet interface, should work in a standard company network ■ **MachineNet**: Settings for the second, optional Ethernet interface; for configuration of the machine network Press the corresponding buttons to save, load and delete profiles
IP address	■ Option **Automatically procure IP address**: The TNC is to procure the IP address from the DHCP server ■ Option **Manually set IP address**: Manually define the IP address and subnet mask. Input: Four numerical values separated by points, in each field, e.g. **160.1.180.20** and **255.255.0.0**
Domain Name Server (DNS)	■ Option **Automatically procure DNS**: The TNC is to automatically procure the IP address of the domain name server ■ Option **Manually configure DNS**: Manually enter the IP addresses of the servers and the domain name
Default gateway	■ Option **Automatically procure default GW**: The TNC is to automatically procure the default gateway ■ Option **Manually configure default GW**: Manually enter the IP addresses of the default gateway

- Apply the changes with the **OK** button, or discard them with the **Cancel** button

▶ Select the **Internet** tab.

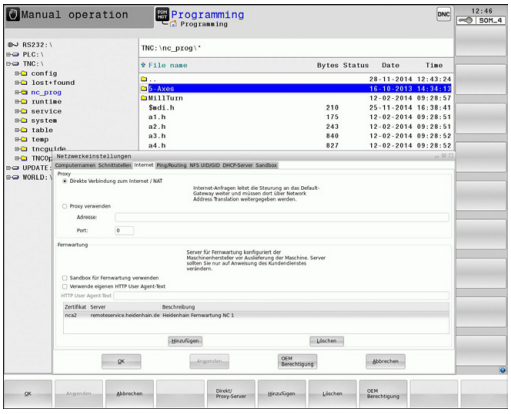

Setting	Meaning
Proxy	■ **Direct connection to Internet /NAT**: The control forwards Internet inquiries to the default gateway and from there they must be forwarded through network address translation (e.g.. if a direct connection to a modem is available) ■ **Use proxy**: Define the **Address** and **Port** of the Internet router in your network, ask your network administrator for the correct address and port
Telemaintenance	The machine manufacturer configures the server for telemaintenance here. Changes must always be made in agreement with your machine tool builder

▶ Select the **Ping/Routing** tab to enter the ping and routing settings:

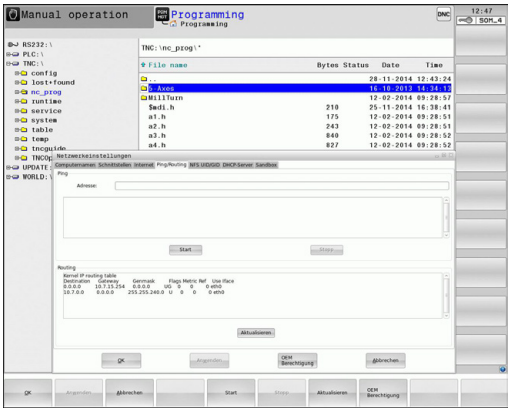

Setting	Meaning
Ping	In the **Address:** field, enter the IP number for which you want to check the network connection. Input: four numerical values separated by periods, e.g. **160.1.180.20**. As an alternative, you can enter the name of the computer whose connection you want to check ■ Press the **Start** button to begin the test. The TNC shows the status information in the Ping field ■ Press the **Stop** button to conclude the test
Routing	For network specialists: Status information of the operating system for the current routing ■ Press the **Update** button to refresh the routing information

▶ Select the **NFS UID/GID** tab to enter the user and group identifications:

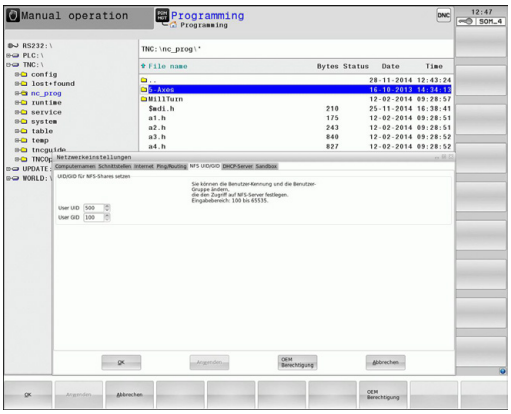

Setting	Meaning
Set UID/GID for NFS shares	■ **User ID**: Definition of which user identification the end user uses to access files in the network. Ask your network specialist for the proper value ■ **Group ID**: Definition of the group identification with which you access files in the network. Ask your network specialist for the proper value

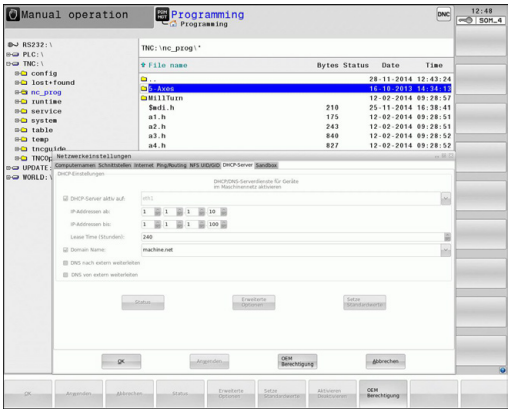

- **DHCP server**: Settings for automatic network configuration

Setting	Meaning
DHCP server	■ **IP addresses from:** Define the IP address as of which the TNC is to derive the pool of dynamic IP addresses. The TNC transfers the values that appear dimmed from the static IP address of the defined Ethernet interface; these values cannot be edited. ■ **IP addresses to**: Define the IP address up to which the TNC is to derive the pool of dynamic IP addresses ■ **Lease Time (hours)**: Time within which the dynamic IP address is to remain reserved for a client. If a client logs on within this time, the TNC reassigns the same dynamic IP address. ■ **Domain name**: Here you can define a name for the machine network if required. This is necessary if the same names are assigned in the machine network and in the external network, for example. ■ **Forward DNS externally**: If **IP Forwarding** is active (Interfaces tab) and the option is active, you can specify that the name resolution for devices in the machine network can also be used by the external network. ■ **Forward DNS from outside**: If **IP Forwarding** is active (Interfaces tab) and the option is active, you can specify that the TNC is to forward DNS inquiries from devices within the machine network to the name server of the external network if the DNS server of the MC cannot answer the inquiry. ■ **Status** button: Call an overview of the devices that are provided with a dynamic IP address in the machine network. You can also select settings for these devices. ■ **Additional options** button: Additional settings for the DNS/DHCP server. ■ **Set standard values** button: Set factory settings.

- **Sandbox**: Changes must always be made in agreement with your machine tool builder

Network settings specific to the device

- Press the **DEFINE NETWORK CONNECTN.** soft key to enter the network settings for a specific device. You can define any number of network settings, but you can manage only seven at one time

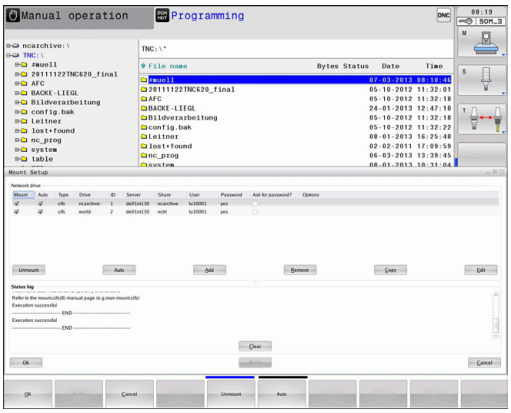

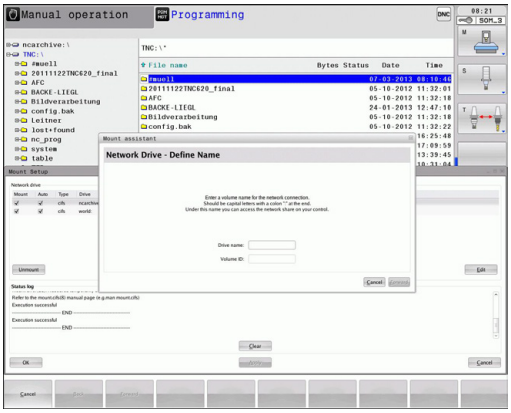

Setting	Meaning
Network drive	List of all connected network drives. The TNC shows the respective status of the network connections in the columns: ■ **Mount**: Network drive connected / not connected ■ **Auto**: Network drive is to be connected automatically/manually ■ **Type**: Type of network connection. cifs and nfs are possible ■ **Drive**: Designation of the drive on the TNC ■ **ID**: Internal ID that identifies if a mount point has been used for more than one connection ■ **Server**: Name of the server ■ **Authorization name**: Name of the directory on the server that the TNC is to access ■ **User**: User name with which the user logs on to the network ■ **Password**: Network drive password protected / not protected ■ **Request password?**: Request / Do not request password during connection ■ **Options**: Display additional connection options To manage the network drives, use the screen buttons. To add network drives, use the **Add** button: The TNC then starts the connection wizard, which guides you by dialog through the required definitions.
Status log	Display of status information and error messages. Press the Clear button to delete the contents of the Status Log window.

18.12 Firewall

Application

You can set up a firewall for the primary network interface of the control. It can be configured so that incoming network traffic is blocked and/or a message is displayed, depending on the sender and the service. The firewall cannot be started for the second network interface of the control if it is active as the DHCP server.

Once the firewall has been activated, a symbol appears at the lower right in the taskbar. The symbol changes depending on the safety level that the firewall was activated with, and informs about the level of the safety settings:

Icon	Meaning
	No firewall protection provided although it was activated in the configuration. This can happen, for example, if PC names were used in the configuration for which there are no equivalent IP addresses as yet.
	Firewall active with medium security level
	Firewall active with high safety level. (All services except for the SSH are blocked)

Have the standard settings checked by your network specialist and change them if necessary.

The settings in the additional tab **SSH settings** are in preparation for future enhancements and currently have no function.

Configuring the firewall

Make your firewall settings as follows:

- Use the mouse to open the task bar at the bottom edge of the screen
  Further Information: Window manager, page 89
- Press the green HEIDENHAIN button to open the JH menu.
- Select the menu item **Settings**
- Select the **Firewall** menu item.

HEIDENHAIN recommends activating the firewall with the prepared default settings:

- Set the **Active** option to enable the firewall
- Press the **Set standard values** button to activate the default settings recommended by HEIDENHAIN
- Close the dialog with **OK**

Firewall settings

Option	Meaning
Active	Switching the firewall on and off
Interface:	Selection of the **eth0** interface usually corresponds to X26 of the MC main computer. **eth1** corresponds to X116. You can check this in the network settings in the Interfaces tab. On main computer units with two Ethernet interfaces, the DHCP server is active by default for the second (non-primary) interface for the machine network. With this setting it is not possible to activate the firewall for **eth1** because the firewall and the DHCP server exclude themselves mutually
Report other inhibited packets:	Firewall active with high safety level. (All services except for the SSH are blocked)
Inhibit ICMP echo answer:	If this option is set, the control no longer responds to a PING request
Service	This column contains the short names of the services that are configured with this dialog. For the configuration it is not important here whether the services themselves have been started ■ **LSV2** contains the functionality for TNCRemoNT and Teleservice, as well as the HEIDENHAIN DNC interface (ports 19000 to 19010) ■ **SMB** only refers to incoming SMB connections, i.e. if a Windows release is made on the NC. Outgoing SMB connections (i.e. if a Windows release is connected to the NC) cannot be prevented. ■ **SSH** stands for the Secure Shell protocol (port 22). As of HEROS 504, the LSV2 can be executed securely tunneled via this SSH protocol. ■ **VNC** protocol means access to the screen contents. If this service is blocked, the screen content can no longer be accessed, not even with the Teleservice programs from HEIDENHAIN (e.g. screenshot). If this service is blocked, the VNC configuration dialog shows a warning from HEROS that VNC is disabled in the firewall.

Option	Meaning
Method	Under **Method** you can configure whether the service should not be available to anyone (**Prohibit all**), available to everyone (**Permit all**) or only available to some (Permit some). If you set **Permit some** you must also specify the computer (under Computer) that you wish to grant access to the respective service. If you do not specify any computer under **Computer**, the setting **Prohibit all** will automatically become active when the configuration is saved.
Log	If **Log** is activated, a "red" message is output if a network package for this service has been blocked. A "blue" message is output if a network packet for this service has been accepted.
Computer	If the setting **Permit some** is selected under **Method**, the relevant computers can be specified here. The computers can be entered with their IP addresses or host names separated by commas. If a host name is used, the system checks upon closing or saving of the dialog whether the host name can be translated into an IP address. If this is not the case, the user receives an error message and the dialog box is not closed. If you enter a valid host name, this host name will be translated into an IP address upon every startup of the control. If a computer that was entered with its name changes its IP address, you may have to restart the control or formally change the firewall configuration to ensure that the control uses the new IP address for a host name in the firewall.
Advanced options	These settings are only intended for your network specialists
Set standard values	Resets the settings to the default values recommended by HEIDENHAIN

18.13 Configure HR 550 FS wireless handwheel

Application

Press the **SET UP WIRELESS HANDWHEEL** soft key to configure the HR 550 FS wireless handwheel. The following functions are available:

- Assigning the handwheel to a specific handwheel holder
- Setting the transmission channel
- Analyzing the frequency spectrum for determining the optimum transmission channel
- Select transmitter power
- Statistical information on the transmission quality

Assigning the handwheel to a specific handwheel holder

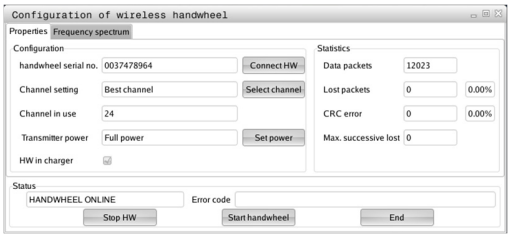

- Make sure that the handwheel holder is connected to the control hardware.
- Place the wireless handwheel you want to assign to the handwheel holder in the handwheel holder
- Press the **MOD** key to select the MOD function
- Select the **Machine settings** menu
- Select the configuration menu for the wireless handwheel: Press the **SET UP WIRELESS HANDWHEEL** soft key
- Click the **Connect HR** button: The TNC saves the serial number of the wireless handwheel located in the handwheel holder and shows it in the configuration window to the left of the **Connect HR** button
- To save the configuration and exit the configuration menu, press the **END** button
- Select the **Machine settings** menu
- Select the configuration menu for the wireless handwheel: Press the **SET UP WIRELESS HANDWHEEL** soft key
- Click the **Connect HR** button: The TNC saves the serial number of the wireless handwheel located in the handwheel holder and shows it in the configuration window to the left of the **Connect HR** button
- To save the configuration and exit the configuration menu, press the **END** button

Setting the transmission channel

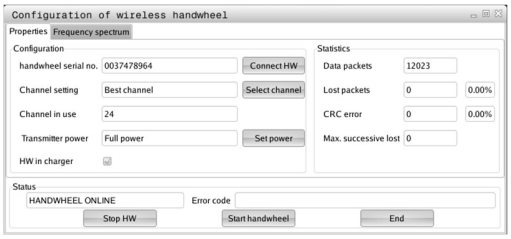

If the wireless handwheel is started automatically, the TNC tries to select the transmission channel supplying the best transmission signal. If you want to set the transmission channel manually, proceed as follows:

- Press the **MOD** key to select the MOD function
- Select the **Machine settings** menu
- Select the configuration menu for the wireless handwheel: Press the **SET UP WIRELESS HANDWHEEL** soft key
- Click the **Frequency spectrum** tab
- Click the **Stop HR** button: The TNC stops the connection to the wireless handwheel and determines the current frequency spectrum for all of the 16 available channels
- Memorize the number of the channel with the least amount of radio traffic (smallest bar)
- Click the **Start handwheel** button to reactivate the wireless handwheel
- Click the **Properties** tab
- Click the **Select channel** button: The TNC shows all available channel numbers. Click the channel number for which the TNC determined the least amount of radio traffic
- To save the configuration and exit the configuration menu, press the **END** button

Selecting the transmitter power

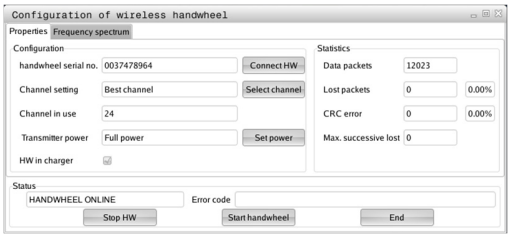

> Please keep in mind that the transmission range of the wireless handwheel decreases when the transmitter power is reduced.

- Press the **MOD** key to select the MOD function
- Select the **Machine settings** menu
- Select the configuration menu for the wireless handwheel: Press the **SET UP WIRELESS HANDWHEEL** soft key
- Click the **Set power** button: The TNC shows the three available power settings. Click the desired setting
- To save the configuration and exit the configuration menu, press the **END** button

Statistical data

To display the statistical data, proceed as follows:

- Press the **MOD** key to select the MOD function
- Select the **Machine settings** menu
- To select the configuration menu for the wireless handwheel, press the **SET UP WIRELESS HANDWHEEL** soft key: The TNC displays the configuration menu with the statistical data

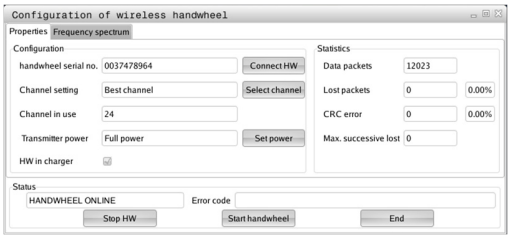

Under **Statistics**, the TNC displays information about the transmission quality.

If the reception quality is poor so that a proper and safe stop of the axes cannot be ensured anymore, an emergency-stop reaction of the wireless handwheel is triggered.

The displayed value **Max. successive lost** indicates whether reception quality is poor. If the TNC repeatedly displays values greater than 2 during normal operation of the wireless handwheel within the desired range of use, then there is a risk of an undesired disconnection. This can be corrected by increasing the transmitter power or by changing to another channel with less radio traffic.

If this occurs, try to improve the transmission quality by selecting another channel or by increasing the transmitter power.

Further Information: Setting the transmission channel, page 625

Further Information: Selecting the transmitter power, page 625

18.14 Load machine configuration

Application

> **!** Caution: Data loss!
> The TNC overwrites your machine configuration when you load (restore) a backup. The overwritten machine data will be lost in the process. You can no longer undo this process!

Your machine tool builder can provide you a backup with a machine configuration. After entering the keyword **RESTORE**, you can load the backup on your machine or programming station. Proceed as follows to load the backup:

- In the MOD dialog, enter the keyword **RESTORE**
- In the TNC's file manager, select the backup file (e.g. BKUP-2013-12-12_.zip). The TNC opens a pop-up window for the backup
- Press the emergency stop
- Press the **OK** soft key to start the backup process

19

Tables and Overviews

19.1 Machine-specific user parameters

Application

The parameter values are entered in the **configuration editor**.

To enable you to set machine-specific functions for users, your machine tool builder can define which machine parameters are available as user parameters. Furthermore, your machine tool builder can integrate additional machine parameters, which are not described in the following, into the TNC.

Refer to your machine manual.

The machine parameters are grouped as parameter objects in a tree structure in the configuration editor. Each parameter object has a name (e.g. **Settings for screen displays**) that gives information about the parameters it contains. A parameter object (entity) is marked with an "E" in the folder symbol in the tree structure. Some machine parameters have a key name to identify them unambiguously. The key name assigns the parameter to a group (e.g. X for X axis). The respective group folder bears the key name and is marked by a "K" in the folder symbol.

If you are in the configuration editor for the user parameters, you can change the display of the existing parameters. In the default setting, the parameters are displayed with short, explanatory texts. To display the actual system names of the parameters, press the key for the screen layout key and then the **SHOW SYSTEM NAME** soft key. Follow the same procedure to return to the standard display.

Parameters not yet active and objects appear dimmed. These can be activated with the **MORE FUNCTIONS** and **INSERT** soft key.

The TNC saves a modification list of the last 20 changes to the configuration data. To restore modifications, select the corresponding line and press the **MORE FUNCTIONS** and **DISCARD CHANGES** soft key.

Calling the configuration editor and changing parameters

- Select the **PROGRAMMING** mode
- Press the **MOD** key
- Enter the code number **123**
- Changing parameters
- Press the **END** soft key to exit the configuration editor
- Confirm changes with the **SAVE** soft key

The icon at the beginning of each line in the parameter tree shows additional information about this line. The icons have the following meanings:

- Branch exists but is closed
- Branch is open
- Empty object, cannot be opened
- Initialized machine parameter
- Uninitialized (optional) machine parameter
- Can be read but not edited
- Can neither be read nor edited

The type of the configuration object is identified by its folder symbol:

- Key (group name)
- List
- Entity (parameter object)

Displaying help texts

The **HELP** key enables you to call a help text for each parameter object or attribute.

If the help text does not fit on one page (e.g. 1/2 is displayed in the upper right-hand corner), press the **HELP PAGE** soft key to scroll to the second page.

To exit the help text, press the **HELP** key again.

As well as the Help text, other information is displayed, e.g. unit of measurement, initial value, selection list. If the selected machine parameter matches a parameter in the previous control model, the corresponding MP number is displayed.

Parameter list

Parameter settings

Display Settings
- Settings for screen display
  - Sequence of displayed axes
    - [0] to [7]
      - **Depends on available axes**
    - Type of position display in position window
      - **NOMINAL**
      - **ACTUAL**
      - **REFACTL**
      - **REFNOML**
      - **LAG**
      - **ACTUAL DIST**
      - **DIST**
      - **M 118**
    - Type of position display in status display
      - **NOMINAL**
      - **ACTUAL**
      - **REF ACTL**
      - **REF NOML**
      - **LAG**
      - **ACTUAL DIST**
      - **DIST**
      - **M 118**
    - Definition of decimal separation characters for position display
      - **.**
    - Display of feed rate in Manual Operation mode
      - **at axis key: Only show feed rate when axis-direction key is pressed**
      - **always minimum: Always show feed rate**
    - Display of spindle position in the position display
      - **during closed loop: Only show spindle position when spindle is in position control**
      - **during closed loop and M5: Show spindle position when spindle is in position control and with M5**
    - Show or hide Preset table soft key
      - **True: Do not display Preset table soft key**
      - **False: Display Preset table soft key**

Parameter settings

DisplaySettings
- Display step for individual axes
  - List of all available axes
    - Display step for position display in mm or degrees
      - **0.1**
      - **0.05**
      - **0.01**
      - **0.005**
      - **0.001**
      - **0.0005**
      - **0.0001**
      - **0.00005 (Option 23)**
      - **0.00001 (Option 23)**
    - Display step for position display in inches
      - **0.005**
      - **0.001**
      - **0.0005**
      - **0.0001**
      - **0.00005 (Option 23)**
      - **0.00001 (Option 23)**

DisplaySettings
- Definition of unit of measure valid for the display
  - **metric: Use metric system**
  - **inch: Use inch system**

DisplaySettings
- Format of NC programs and display of cycles
  - Program input in HEIDENHAIN conversational format or in DIN/ISO
    - **HEIDENHAIN: Program input in Positioning with MDI in conversational format**
    - **ISO: Program input in Positioning with MDI mode of operation in DIN/ISO**

Parameter settings

DisplaySettings

Setting the NC and PLC dialog language

NC dialog language

ENGLISH
GERMAN
CZECH
FRENCH
ITALIAN
SPANISH
PORTUGUESE
SWEDISH
DANISH
FINNISH
DUTCH
POLISH
HUNGARIAN
RUSSIAN
CHINESE
CHINESE_TRAD
SLOVENIAN
KOREAN
NORWEGIAN
ROMANIAN
SLOVAK
TURKISH

PLC dialog language

See NC dialog language

PLC error message language

See NC dialog language

Help language

See NC dialog language

Parameter settings

DisplaySettings
- Behavior with control start-up
  - Acknowledge "Power interrupted" message
    - **TRUE: Control start-up is not continued until the message has been acknowledged**
    - **FALSE: "Power interrupted" message not displayed**

Display Settings
- Display mode for time display
  - Selection for display mode in the time display
    - **Analog**
    - **Digital**
    - **Logo**
    - **Analog and Logo**
    - **Digital and Logo**
    - **Analog on Logo**
    - **Digital on Logo**

DisplaySettings
- Link row On/Off
  - Display setting for link row
    - **OFF: Deactivate the information line in the operating mode line**
    - **ON: Activate the information line in the operating mode line**

DisplaySettings
- Settings for 3-D graphic simulation
  - Model type of 3-D graphic simulation
    - **3-D (processor-intensive): Model display for complex machining with undercuts**
    - **2.5-D: Model display for 3-axis machining**
    - **No Model: Model display deactivated**
  - Model quality of 3-D graphic simulation
    - **very high: High resolution; Display of block end points possible**
    - **high: High resolution**
    - **medium: Medium resolution**
    - **low: Low resolution**

Display Settings
- Settings for position display
  - Position display with TOOL CALL DL
    - **As Tool Length: The programmed oversize DL is considered as a tool length modification for display of the workpiece-oriented position**
    - **As Workpiece Oversize: The programmed oversize DL is considered as a workpiece oversize for display of the workpiece-oriented position**

Parameter settings

ProbeSettings

Configuration of tool measurement

TT140_1

M function for spindle orientation

-1: Spindle orientation directly via NC

0: Function inactive

1 to 999: Number of M function for spindle orientation

Probing routine

MultiDirections: Probe from several directions

Single Direction: Probe from one direction

Probing direction for tool radius measurement

X_Positive, Y_Positive,X_Negative, Y_Negative, Z_Positive, Z_Negative (depending on tool axis)

Distance of tool lower edge to probe contact upper edge

0.001 to 99.9999 [mm]: Offset of stylus to tool

Rapid traverse in probing cycle

10 to 300,000 [mm/min]: Rapid traverse in probing cycle

Probing feed rate with tool measurement

1 to 3,000 [mm/min]: Probing feed rate with tool measurement

Calculation of probing feed rate

ConstantTolerance: Calculation of probing feed rate with constant tolerance

Variable Tolerance: Calculation of probing feed rate with variable tolerance

Constant Feed: Constant probing feed rate

Type of speed determination

Automatic: Determine speed automatically

MinSpindleSpeed: Use minimum spindle speed

Max. permissible rotational speed on cutting edge

1 to 129 [m/min]: Permissible rotational speed on cutter circumference

Maximum permissible speed with tool measurement

0 to 1000 [1/min]: Maximum permissible speed

Maximum permissible measurement error with tool measurement

0.001 to 0.999 [mm]: First maximum permissible measurement error

Maximum permissible measurement error with tool measurement

0.001 to 0.999 [mm]: Second maximum permissible measurement error

NC stop during tool check

True: When breakage tolerance is exceeded the NC program is stopped

False: The NC program is not stopped

Parameter settings

NC stop during tool measurement

True: When the breakage tolerance is exceeded the NC program is stopped

False: The NC program is not stopped

Modification of tool table during tool check and measurement

AdaptOnMeasure: Table modified after tool measurement

AdaptOnBoth: Table modified after tool check and measurement

AdaptNever: Table not modified after tool check and measurement

Configuring a round stylus

TT140_1

Coordinates of stylus center

[0]: X coordinates of stylus center referenced to machine datum

[1]: Y coordinates of stylus center referenced to machine datum

[2]: Z coordinates of stylus center referenced to machine datum

Safety clearance above stylus for pre-position

0.001 to 99,999.9999 [mm]: Safety clearance in tool axis direction

Safety zone around stylus for pre-positioning

0.001 to 99,999.9999 [mm]: Safety clearance in the plane vertically to the tool axis

Parameter settings

Channel Settings
- CH_NC
  - Active kinematics
    - Kinematics to be activated
      - **List of machine kinematics**
    - Kinematics to be activated with control start-up
      - **List of machine kinematics**
  - Determining the behavior of the NC program
    - Resetting the machining time with program start
      - **True: Machining time is reset**
      - **False: Machining time is not reset**
    - PLC signal for number of pending machining cycle
      - **Dependent on machine manufacturer**
  - Geometry tolerances
    - Permissible deviation of circle radius
      - **0.0001 to 0.016 [mm]: Permissible deviation of circle radius on the circle end point compared to circle start point**
  - Configuration of machining cycles
    - Overlap factor for pocket milling
      - **0.001 to 1.414: Overlap factor for Cycle 4 POCKET MILLING and Cycle 5 CIRCULAR POCKET**
    - Behavior after machining a contour pocket
      - **PosBeforeMachining: Position as before machining a cycle**
      - **ToolAxClearanceHeight: Position tool axis to clearance height**
    - Display "Spindle ?" error message if M3/M4 is not active
      - **on: Output error message**
      - **off: Do not output error message**
    - Display "Enter negative depth" error message
      - **on: Output error message**
      - **off: Do not output error message**
    - Approach behavior on a slot wall in a cylindrical surface
      - **LineNormal: Approach with straight line**
      - **CircleTangential: Approach with an arc movement**
    - M function for spindle orientation in machining cycles
      - **-1: Spindle orientation directly via NC**
      - **0: Function inactive**
      - **1 to 999: Number of M function for spindle orientation**
    - Do not display "Plunging type not possible" error message
      - **on: Error message is not displayed**

Parameter settings

off: Error message is displayed

Geometry filter for filtering out linear elements

Type of stretch filter

- Off: No filter active

- ShortCut: Leave out single points on polygon

- Average: The geometry filter smooths corners

Maximum distance of filtered to unfiltered contour

0 to 10 [mm]: The filtered out points lie within this tolerance to the resultant distance

Maximum length of distance resulting from filtering

0 to 1000 [mm]: Length over which geometry filtering is effective

Parameter settings

Settings for the NC editor

Creating backup files

TRUE: Create backup file after editing NC programs

FALSE: Create no backup file after editing NC programs

Cursor behavior after deleting lines

TRUE: Cursor is on previous line after deletion (iTNC behavior)

FALSE: Cursor is on subsequent line after deletion

Cursor behavior with the first and last line

TRUE: All-round cursors permitted at PGM beginning/end

FALSE: All-round cursors not permitted at PGM beginning/end

Line break with multi-line blocks

ALL: Always show lines completely

ACT: Only show lines of the active block completely

NO: Only show lines completely if the block is edited

Activate help graphics with cycle input

TRUE: Fundamentally always show help graphics during input

FALSE: Only show help graphics if the CYCLE HELP soft key is set to ON. The CYCLE HELP OFF/ON soft key is displayed in the Programming mode after pressing the "Screen layout" button

Behavior of soft key row following a cycle input

TRUE: Leave cycle soft key row active after a cycle definition

FALSE: Hide cycle soft key row after a cycle definition

Confirmation request before block is deleted

TRUE: Display confirmation request before deleting an NC block

FALSE: Do not display confirmation request before deleting an NC block

Line number up to which NC program is tested

100 to 100000: Program length for which geometry should be tested

ISO programming: Block number increment

0 to 250: Increment for generating ISO blocks in the program

Define programmable axes

TRUE: Use defined axis configuration

FALSE: Use default axis configuration XYZABCUVW

Behavior with paraxial positioning blocks

TRUE: Paraxial positioning blocks permitted

FALSE: Paraxial positioning blocks locked

Line number up to which identical syntax elements are searched for

500 to 400000: Search for selected elements with up/down arrow keys

Parameter settings

Settings for the file manager

Display of dependent files

MANUAL: Dependent files are displayed

AUTOMATIC: Dependent files are not displayed

Path specifications for end users

List with drives and/or directories

Drives and directories entered here are shown by the TNC in the file manager

FN 16 output path for execution

Path for FN 16 output if no path has been defined in the program

FN 16 output path for Programming and Test Run operating modes

Path for FN 16 output if no path has been defined in the program

---

Serial Interface RS232

Further Information: Setting up data interfaces, page 609

19.2 Connector pin layout and connection cables for data interfaces

RS-232-C/V.24 interface for HEIDENHAIN devices

The interface complies with the requirements of EN 50 178 for **low voltage electrical separation**.

When using the 25-pin adapter block:

TNC		**Conn. cable 365725-xx**			**Adapter block 310085-01**		**Conn. cable 274545-xx**		
Male	Assignment	Female	Color	Female	Male	Female	Male	Color	Female
1	Do not assign	1		1	1	1	1	White/ Brown	1
2	RXD	2	Yellow	3	3	3	3	Yellow	2
3	TXD	3	Green	2	2	2	2	Green	3
4	DTR	4	Brown	20	20	20	20	Brown	8
5	Signal GND	5	Red	7	7	7	7	Red	7
6	DSR	6	Blue	6	6	6	6		6
7	RTS	7	Gray	4	4	4	4	Gray	5
8	CTR	8	Pink	5	5	5	5	Pink	4
9	Do not assign	9					8	Violet	20
Hsg.	External shield	Hsg.	External shield	Hsg.	Hsg.	Hsg.	Hsg.	External shield	Hsg.

When using the 9-pin adapter block:

TNC		**Conn. cable 355484-xx**			**Adapter block 363987-02**		**Conn. cable 366964-xx**		
Male	Assignment	Female	Color	Male	Female	Male	Female	Color	Female
1	Do not assign	1	Red	1	1	1	1	Red	1
2	RXD	2	Yellow	2	2	2	2	Yellow	3
3	TXD	3	White	3	3	3	3	White	2
4	DTR	4	Brown	4	4	4	4	Brown	6
5	Signal GND	5	Black	5	5	5	5	Black	5
6	DSR	6	Violet	6	6	6	6	Violet	4
7	RTS	7	Gray	7	7	7	7	Gray	8
8	CTR	8	White/ Green	8	8	8	8	White/ Green	7
9	Do not assign	9	Green	9	9	9	9	Green	9
Hsg.	External shield	Hsg.	External shield	Hsg.	Hsg.	Hsg.	Hsg.	External shield	Hsg.

Non-HEIDENHAIN devices

The connector layout of a non-HEIDENHAIN device may substantially differ from that of a HEIDENHAIN device.

It depends on the unit and the type of data transfer. The table below shows the connector pin layout on the adapter block.

Adapter block 363987-02		**Conn. cable 366964-xx**		
Female	Male	Female	Color	Female
1	1	1	Red	1
2	2	2	Yellow	3
3	3	3	White	2
4	4	4	Brown	6
5	5	5	Black	5
6	6	6	Violet	4
7	7	7	Gray	8
8	8	8	White/ Green	7
9	9	9	Green	9
Hsg.	Hsg.	Hsg.	Ext. shield	Hsg.

Ethernet interface RJ45 socket

Maximum cable length:

- Unshielded: 100 m
- Shielded: 400 m

Pin	**Signal**	**Description**
1	TX+	Transmit Data
2	TX–	Transmit Data
3	REC+	Receive Data
4	Vacant	
5	Vacant	
6	REC–	Receive Data
7	Vacant	
8	Vacant	

19.3 Technical Information

Explanation of symbols

- ■ Default
- □ Axis option
- **1** Advanced Function Set 1
- **2** Advanced Function Set 2

User functions

Short description	■	Basic version: 3 axes plus closed-loop spindle
	■	Fourth NC axis plus auxiliary axis
		or
	□	8 additional axes or 7 additional axes plus 2nd spindle
	■	Digital current and speed control
Short description	■	Basic version: 3 axes plus closed-loop spindle
	□	1st additional axis for 4 axes plus closed-loop spindle
	□	2nd additional axis for 5 axes plus closed-loop spindle
Program entry	In HEIDENHAIN conversational format and ISO	
Position entry	■	Nominal positions for lines and arcs in Cartesian coordinates or polar coordinates
	■	Incremental or absolute dimensions
	■	Display and entry in mm or inches
Tool compensation	■	Tool radius in the working plane and tool length
	■	Radius compensated contour look ahead for up to 99 blocks (M120)
	2	Three-dimensional tool-radius compensation for changing tool data without having to recalculate an existing program
Tool tables	Multiple tool tables with any number of tools	
Constant contour speed	■	With respect to the path of the tool center
	■	With respect to the cutting edge
Parallel operation	Creating a program with graphical support while another program is being run	
3-D machining (Advanced Function Set 2)	**2**	Motion control with minimum jerk
	2	3-D tool compensation through surface-normal vectors
	2	Using the electronic handwheel to change the angle of the swivel head during program run without affecting the position of the tool point. (TCPM = Tool Center Point Management)
	2	Keeping the tool normal to the contour
	2	Tool radius compensation perpendicular to traversing and tool direction
Rotary table machining (Advanced Function Set 1)	**1**	Programming of cylindrical contours as if in two axes
	1	Feed rate in distance per minute
Contour elements	■	Straight line
	■	Chamfer
	■	Circular path

User functions		
	■	Circle center
	■	Circle radius
	■	Tangentially connected arc
	■	Rounded corners
Approaching and departing the contour	■	Via straight line: tangential or perpendicular
	■	Via circular arc
FK free contour programming	■	FK free contour programming in HEIDENHAIN conversational format with graphic support for workpiece drawings not dimensioned for NC
Program jumps	■	Subprograms
	■	Program section repeat
	■	Any desired program as subprogram
Machining cycles	■	Cycles for drilling, and conventional and rigid tapping
	■	Roughing of rectangular and circular pockets
	■	Cycles for pecking, reaming, boring, and counterboring
	■	Cycles for milling internal and external threads
	■	Finishing of rectangular and circular pockets
	■	Cycles for clearing level and inclined surfaces
	■	Cycles for milling linear and circular slots
	■	Cartesian and polar point patterns
	■	Contour-parallel contour pocket
	■	Contour train
	■	Cycles for turning operations
	■	OEM cycles (special cycles developed by the machine manufacturer) can also be integrated
Coordinate transformation	■	Datum shift, rotation, mirroring
	■	Scaling factor (axis-specific)
	1	Tilting the working plane (Advanced Function Set 1)
Q parameters Programming with variables	■	Mathematical functions: =, +, –, *, sin α, cos α, root
	■	Logical operations (=, ≠, <, >)
	■	Calculating with parentheses
	■	tan α, arc sin, arc cos, arc tan, a^n, e^n, ln, log, absolute value of a number, constant π, negation, truncation of digits before or after the decimal point
	■	Functions for calculation of circles
	■	String parameters
Programming aids	■	Calculator
	■	Complete list of all current error messages
	■	Context-sensitive help function for error messages
	■	Graphic support for the programming of cycles
	■	Comment blocks in NC program

User functions		
Teach-In	■	Actual positions can be transferred directly to the NC program
Test graphics Display modes	■	Graphical simulation before a program run, also while another program is being run
	■	Plan view / projection in 3 planes / 3-D view / 3-D line graphic
	■	Detail enlargement
Programming graphics	■	In Programming mode, the contour of the NC blocks is drawn on screen while they are being entered (2-D pencil-trace graphics), even if another program is running
Program-run graphics Display modes	■	Graphic simulation of real-time machining in plan view / projection in 3 planes / 3-D view
Machining time	■	Calculating the machining time in the Test Run operating mode
	■	Display of the current machining time in the Program Run operating modes
Contour, returning to	■	Block scan in any block in the program, returning the tool to the calculated nominal position to continue machining
	■	Program interruption, contour departure and return
Datum tables	■	Multiple datum tables for storing workpiece-specific datums
Touch probe cycles	■	Calibrating the touch probe
	■	Compensation of workpiece misalignment, manual or automatic
	■	Datum setting, manual or automatic
	■	Automatically measuring workpieces
	■	Cycles for automatic tool measurement
	■	Cycles for automatic kinematics measurement

19.3 Technical Information

Specifications		
Components	■	Operating panel
	■	TFT color flat-panel display with soft keys
Program memory	■	Minimum 21 GB
Input resolution and display step	■	As fine as 0.1 µm for linear axes
	■	As fine as 0.01 µm for linear axes (with option 23)
	■	Up to 0.0001° for rotary axes
	■	Up to 0.000 01° for rotary axes (with option 23)
Input range	■	Maximum 999 999 999 mm or 999 999 999°
Interpolation	■	Linear in 4 axes
	■	Circular in 2 axes
	■	Helical: superimposition of circular and straight paths
Block processing time 3-D straight line without radius compensation	■	0.5 ms
Axis feedback control	■	Position loop resolution: Signal period of the position encoder/1024
	■	Cycle time of position controller: 3 ms
	■	Cycle time of speed controller: 200 µs
Range of traverse	■	Maximum 100 m (3937 inches)
Spindle speed	■	Maximum 100,000 rpm (analog speed command signal)
Error compensation	■	Linear and nonlinear axis error, backlash, reversal peaks during circular movements, thermal expansion
	■	Static friction
Data interfaces	■	One each RS-232-C /V.24 max. 115 kilobaud
	■	Expanded interface with LSV-2 protocol for external operation of the TNC over the interface with HEIDENHAIN software TNCremo
	■	Ethernet interface 1000 BaseT
	■	5 x USB (1 x front USB 2.0; 4 x rear USB 3.0)
Ambient temperature	■	Operation: 5 °C to +40 °C
	■	Storage: -20 °C to +60 °C

Accessories		
Electronic Handwheels	■	One HR 410 portable handwheel, or
	■	One HR 550 FS portable wireless handwheel with display or
	■	One HR 520 portable handwheel with display, or
	■	One HR 420 portable handwheel with display or
	■	One HR 130 panel-mounted handwheel; or
	■	Up to three HR 150 panel-mounted handwheels via HRA 110 handwheel adapter
Touch probes	■	TS 260: Triggering 3-D touch probe with cable connection
	■	TS 440: 3-D touch trigger probe with infrared transmission
	■	TS 444: Battery-free 3-D touch trigger probe with infrared transmission
	■	TS 640: 3-D touch trigger probe with infrared transmission
	■	TS 740: High-precision 3-D touch trigger probe with infrared transmission
	■	TT 160: 3-D touch trigger probe for tool measurement
	■	TT 449: 3-D touch trigger probe for tool measurement with infrared transmission

Advanced Function Set 1 (option 8)	
Expanded functions Group 1	**Machining with rotary tables** ■ Cylindrical contours as if in two axes ■ Feed rate in distance per minute **Coordinate transformations:** Tilting the working plane **Interpolation:** Circle in 3 axes with tilted working plane (spatial arc)

Advanced Function Set 2 (option 9)	
Expanded functions Group 2	**3-D machining:** ■ Motion control with minimum jerk ■ 3-D tool compensation through surface normal vectors ■ Using the electronic handwheel to change the angle of the swivel head during program run without affecting the position of the tool point. (TCPM = Tool Center Point Management) ■ Keeping the tool normal to the contour ■ Tool radius compensation perpendicular to traversing direction and tool direction **Interpolation:** Linear in 5 axes (subject to export permit)

HEIDENHAIN DNC (option 18)	
	Communication with external PC applications over COM component

Display Step (option 23)	
Display step	**Input resolution:** ■ Linear axes down to 0.01 µm ■ Rotary axes to 0.00001°
Dynamic Collision Monitoring – DCM (option 40)	
Dynamic Collision Monitoring	■ The machine manufacturer defines objects to be monitored ■ Warning in Manual operation ■ Program interrupt in Automatic operation ■ Includes monitoring of 5-axis movements
DXF Converter (option 42)	
DXF converter	■ Supported DXF format: AC1009 (AutoCAD R12) ■ Adoption of contours and point patterns ■ Simple and convenient specification of reference points ■ Select graphical features of contour sections from conversational programs
Adaptive Feed Control – AFC (option 45)	
Adaptive Feed Control	■ Recording the actual spindle power by means of a teach-in cut ■ Defining the limits of automatic feed rate control ■ Fully automatic feed control during program run
KinematicsOpt (option 48)	
Optimizing the machine kinematics	■ Backup/restore active kinematics ■ Test active kinematics ■ Optimize active kinematics
Mill-Turning (option 50)	
Milling and turning modes	**Functions:** ■ Switching between Milling/Turning mode of operation ■ Constant surface speed ■ Tool-tip radius compensation ■ Turning cycles
Extended Tool Management (option 93)	
Extended tool management	Python-based
Advanced Spindle Interpolation (option number 96)	
Interpolating spindle	**Interpolation turning:** ■ Cycle 880: Gear hobbing ■ Cycle 291: Interpolation turning, coupling ■ Cycle 292: Interpolation turning, contour finishing
Spindle Synchronism (option 131)	
Spindle synchronization	Synchronization of milling spindle and turning spindle

Remote Desktop Manager (option 133)	
Remote operation of external computer units	■ Windows on a separate computer unit ■ Incorporated in the TNC interface

Synchronizing Functions (option 135)	
Synchronization functions	**Real Time Coupling – RTC:** Coupling of axes

Visual Setup Control – VSC (option number 136)	
Camera-based monitoring of the setup situation	■ Record the setup situation with a HEIDENHAIN camera system ■ Visual comparison of planned and actual status in the workspace

Cross Talk Compensation – CTC (option number 141)	
Compensation of axis couplings	■ Determination of dynamically caused position deviation through axis acceleration ■ Compensation of the TCP (**T**ool **C**enter **P**oint)

Position Adaptive Control – PAC (option 142)	
Adaptive position control	■ Changing of the control parameters depending on the position of the axes in the working space ■ Changing of the control parameters depending on the speed or acceleration of an axis

Load Adaptive Control – LAC (option 143)	
Adaptive load control	■ Automatic determination of workpiece weight and frictional forces ■ Changing of control parameters depending on the actual mass of the workpiece

Active Chatter Control – ACC (option number 145)	
Active chatter control	Fully automatic function for chatter control during machining

Active Vibration Damping – AVD (option number 146)	
Active vibration damping	Damping of machine oscillations to improve the workpiece surface

Input formats and units of TNC functions	
Positions, coordinates, circle radii, chamfer lengths	-99 999.9999 to +99 999.9999 (5, 4: places before the decimal point, places after the decimal point) [mm]
Tool numbers	0 to 32 767.9 (5, 1)
Tool names	32 characters, enclosed by quotation marks with **TOOL CALL**. Permitted special characters: #, $, %, &, -
Detail values for tool compensation	–99.9999 to +99.9999 (2, 4) [mm]
Spindle speeds	0 to 99 999.999 (5, 3) [rpm]
Feed rates	0 to 99,999.999 (5, 3) [mm/min] or [mm/tooth] or [mm/1]
Dwell time in Cycle 9	0 to 3600.000 (4, 3) [s]
Thread pitch in various cycles	-9.9999 to +9.9999 (2, 4) [mm]
Angle for spindle orientation	0 to 360.0000 (3, 4) [°]
Angle for polar coordinates, rotation, tilting the working plane	-360.0000 to 360.0000 (3, 4) [°]
Polar coordination for screw line interpolation (CP)	–5 400.0000 to 5 400.0000 (4, 4) [°]
Datum numbers in Cycle 7	0 to 2999 (4, 0)
Scaling factor in Cycles 11 and 26	0.000001 to 99.999999 (2, 6)
Miscellaneous functions M	0 to 999 (4, 0)
Q parameter numbers	0 to 1999 (4, 0)
Q parameter values	–99 999.9999 to +99 999.9999 (9, 6)
Surface-normal vectors N and T with 3-D compensation	–9.99999999 to +9.99999999 (1, 8)
Labels (LBL) for program jumps	0 to 999 (5, 0)
Labels (LBL) for program jumps	Any text string in quotation marks (“”)
Number of program section repeats REP	1 to 65 534 (5, 0)
Error number in Q parameter function FN14	0 to 1199 (4, 0)

19.4 Overview tables

Fixed cycles

Cycle number	Cycle name	DEF active	CALL active
7	DATUM SHIFT	■	
8	MIRROR IMAGE	■	
9	DWELL TIME	■	
10	ROTATION	■	
11	SCALING	■	
12	PGM CALL	■	
13	ORIENTATION	■	
14	CONTOUR GEOMETRY	■	
19	WORKING PLANE	■	
20	CONTOUR DATA	■	
21	PILOT DRILLING		■
22	ROUGH-OUT		■
23	FLOOR FINISHING		■
24	SIDE FINISHING		■
25	CONTOUR TRAIN		■
26	AXIS-SPECIFIC SCALING	■	
27	CYLINDER SURFACE		■
28	CYLINDER SURFACE		■
29	CYL SURFACE RIDGE		■
32	TOLERANCE	■	
39	CYL. SURFACE CONTOUR		■
200	DRILLING		■
201	REAMING		■
202	BORING		■
203	UNIVERSAL DRILLING		■
204	BACK BORING		■
205	UNIVERSAL PECKING		■
206	TAPPING		■
207	RIGID TAPPING		■
208	BORE MILLING		■
209	TAPPING W/ CHIP BRKG		■
210	SLOT RECIP. PLNG		■
211	CIRCULAR SLOT		■
212	POCKET FINISHING		■
213	STUD FINISHING		■

Cycle number	Cycle name	DEF active	CALL active
214	C. POCKET FINISHING		■
214	C. STUD FINISHING		■
220	POLAR PATTERN	■	
221	CARTESIAN PATTERN	■	
225	ENGRAVING		■
230	MULTIPASS MILLING		■
231	RULED SURFACE		■
232	FACE MILLING		■
233	FACE MILLING		■
239	ASCERTAIN THE LOAD	■	
240	CENTERING		■
241	SINGLE-LIP D.H.DRLNG		■
247	DATUM SETTING	■	
251	RECTANGULAR POCKET		■
252	CIRCULAR POCKET		■
253	SLOT MILLING		■
254	CIRCULAR SLOT		■
256	RECTANGULAR STUD		■
257	CIRCULAR STUD		■
258	POLYGON STUD		■
262	THREAD MILLING		■
263	THREAD MLLNG/CNTSNKG		■
264	THREAD DRILLNG/MLLNG		■
265	HEL. THREAD DRLG/MLG		■
267	OUTSIDE THREAD MLLNG		■
270	CONTOUR TRAIN DATA	■	
275	TROCHOIDAL SLOT		■
291	COUPLG.TURNG.INTERP.		■
292	CONTOUR.TURNG.INTRP.		■
800	ADJUST XZ SYSTEM	■	
801	RESET ROTARY COORDINATE SYSTEM	■	
810	TURN CONTOUR LONG.		■
811	SHOULDER, LONGITDNL.		■
812	SHOULDER, LONG. EXT.		■
813	TURN PLUNGE CONTOUR LONGITUDINAL		■
814	TURN PLUNGE LONGITUDINAL EXT.		■
815	CONTOUR-PAR. TURNING		■
820	TURN CONTOUR TRANSV.		■

Cycle number	Cycle name	DEF active	CALL active
821	SHOULDER, FACE		■
822	SHOULDER, FACE. EXT.		■
823	TURN TRANSVERSE PLUNGE		■
824	TURN PLUNGE TRANSVERSE EXT.		■
830	THREAD CONTOUR-PARALLEL		■
831	THREAD LONGITUDINAL		■
832	THREAD EXTENDED		■
840	RECESS TURNG, RADIAL		■
841	SIMPLE REC. TURNG., RADIAL DIR.		■
842	ENH.REC.TURNNG, RAD.		■
850	RECESS TURNG, AXIAL		■
851	SIMPLE REC TURNG, AX		■
852	ENH.REC.TURNING, AX.		■
860	CONT. RECESS, RADIAL		■
861	SIMPLE RECESS, RADL.		■
862	EXPND. RECESS, RADL.		■
870	CONT. RECESS, AXIAL		■
871	SIMPLE RECESS, AXIAL		■
872	EXPND. RECESS, AXIAL		■
880	GEAR HOBBING		■
892	CHECK IMBALANCE	■	

Miscellaneous functions

M	Effect	Effective at block	Start	End	Page
M0	Program STOP/Spindle STOP/Coolant OFF			■	358
M1	Optional program run STOP/Spindle STOP/Coolant OFF			■	595
M2	Stop program/Spindle STOP/Coolant OFF/ CLEAR status display (depending on machine parameter)/Return jump to block 1			■	358
M3	Spindle ON clockwise		■		358
M4	Spindle ON counterclockwise		■		
M5	Spindle STOP			■	
M6	Tool change/STOP program run (depending on machine parameter)/ Spindle STOP			■	358
M8	Coolant ON		■		358
M9	Coolant OFF			■	
M13	Spindle ON clockwise/Coolant ON		■		358
M14	Spindle ON counterclockwise/Coolant on		■		
M30	Same function as M2			■	358
M89	Vacant miscellaneous function **or**		■		Cycles
	cycle call, modally effective (depending on machine parameter)			■	Manual

M	Effect	Effective at block	Start	End	Page
M91	Within the positioning block: Coordinates are referenced to machine datum		■		359
M92	Within the positioning block: Coordinates are referenced to a position defined by machine manufacturer, e.g. tool change position		■		359
M94	Reduce the rotary axis display to a value below 360°		■		448
M97	Machine small contour steps			■	362
M98	Machine open contours completely			■	363
M99	Blockwise cycle call			■	Cycles Manual
M101	Automatic tool change with replacement tool if maximum tool life has expired			■	189
M102	Reset M101			■	
M107	Suppress error message for replacement tools with oversize			■	189
M108	Reset M107			■	
M109	Constant contouring speed at cutting edge (feed rate increase and reduction)		■		366
M110	Constant contouring speed at cutting edge (only feed rate reduction)		■		
M111	Reset M109/M110			■	
M116	Feed rate in mm/min on rotary axes		■		446
M117	Reset M116			■	
M118	Superimpose handwheel positioning during program run		■		369
M120	Pre-calculate the radius-compensated contour (LOOK AHEAD)		■		367
M126	Shorter-path traverse of rotary axes		■		447
M127	Reset M126			■	
M128	Maintaining the position of the tool tip when positioning with tilted axes (TCPM)		■		449
M129	Reset M128			■	
M130	Within the positioning block: Points are referenced to the untilted coordinate system		■		361
M138	Selection of tilted axes		■		452
M140	Retraction from the contour in the tool-axis direction		■		371
M143	Delete basic rotation		■		374
M144	Compensating the machine's kinematic configuration for ACTUAL/NOMINAL positions at end of block		■		453
M145	Reset M144			■	
M141	Suppress touch probe monitoring		■		373
M148	Automatically retract tool from the contour at an NC stop		■		375
M149	Reset M148			■	

19.5 Functions of the TNC 640 and the iTNC 530 compared

Comparison: Specifications

Function	TNC 640	iTNC 530
Axes	18 maximum	18 maximum
Input resolution and display step:		
■ Linear axes	■ 0.1µm, 0.01 µm with option 23	■ 0.1 µm
■ Rotary axes	■ 0.001°, 0.00001° with option 23	■ 0.0001°
Control loops for high-frequency spindles and torque/linear motors	With option 49	With option 49
Display	19-inch TFT color flat-panel display or	19-inch TFT color flat-panel display or 15.1-inch TFT color flat-panel display
Memory media for NC, PLC programs and system files	Hard disk or SSDR solid state disk	Hard disk or SSDR solid state disk
Program memory for NC programs	> 21 GB	> 21 GB
Block processing time	0.5 ms	0.5 ms
HeROS operating system	Yes	Yes
Interpolation:		
■ Straight line	■ 5 axes	■ 5 axes
■ Circle	■ 3 axes	■ 3 axes
■ Helix	■ yes	■ Yes
■ Spline	■ No	■ Yes with option 9
Hardware	Modular in electrical cabinet	Modular in electrical cabinet

Comparison: Data interfaces

Function	TNC 640	iTNC 530
Gigabit Ethernet 1000BaseT	X	X
RS-232-C/V.24 serial interface	X	X
RS-422/V.11 serial interface	-	X
USB interface	X	X

19.5 Functions of the TNC 640 and the iTNC 530 compared

Comparison: Accessories

Function	TNC 640	iTNC 530
Electronic handwheels		
■ HR 410510	X	X
■ HR 420	X	X
■ HR 520/530/550	X	X
■ HR 130	X	X
■ HR 150 via HRA 110	X	X
Touch probes		
■ TS 260/TS 460	X	X
■ TS 440/TS 444	X	X
■ TS 640/TS 642/TS 740	X	X
■ TS 220/TS 230	X	X
■ TS 249	X	X
■ SE 660	X	X
■ SE 540/SE 640/SE 642	X	X
■ TT 140	X	X
■ TT 160/TT460	X	X
■ TT 449	X	X
■ TL Nano	X	X
■ TL Micro 150/200/300	X	X
Industrial PCs		
■ IPC 6641	X	X
■ ITC 750/760	X	X
■ ITC 755	X	X

Comparison: PC software

Function	TNC 640	iTNC 530
Programming station software	Available	Available
TNCremo for data transfer with **TNCbackup** for data back-up	Available	Available
TNCremoPlus data transfer software with "live" screen	Available	Available
virtualTNC: Control component for virtual machines	Available	Available

Comparison: Machine-specific functions

Function	TNC 640	iTNC 530
Switching the traverse range	Function available	Function available
Central drive (1 motor for multiple machine axes)	Function available	Function available
C axis drive (spindle motor drives rotary axis)	Function available	Function available
Automatic exchange of milling head	Function available	Function available
Support of angle heads	Function not available	Function available
Balluff tool identification	Function available (with Python)	Function available
Management of multiple tool magazines	Function available	Function available
Expanded tool management via Python	Function available	Function available

Comparison: User functions

Function	TNC 640	iTNC 530
Program entry		
■ In HEIDENHAIN conversational format	■ X	■ X
■ DIN/ISO	■ X	■ X
■ With smarT.NC	■ –	■ X
■ With ASCII editor	■ X, directly editable	■ X, editable after conversion
Position entry		
■ Nominal positions for lines and arcs in Cartesian coordinates	■ X	■ X
■ Nominal positions for lines and arcs in polar coordinates	■ X	■ X
■ Incremental or absolute dimensions	■ X	■ X
■ Display and entry in mm or inches	■ X	■ X
■ Set the last tool position as pole (empty CC block)	■ X (error message if pole transfer is ambiguous)	■ X
■ Surface-normal vectors (**LN**)	■ X	■ X
■ Spline sets (**SPL**)	■ –	■ X, with option 9

19.5 Functions of the TNC 640 and the iTNC 530 compared

Function	TNC 640	iTNC 530
Tool compensation		
■ In the working plane and tool length	■ X	■ X
■ Radius compensated contour look ahead for up to 99 blocks	■ X	■ X
■ Three-Dimensional Tool Radius Compensation	■ X, with option 9	■ X, with option 9
Tool table		
■ Central storage of tool data	■ X	■ X
■ Multiple tool tables with any number of tools	■ X	■ X
■ Flexible management of tool types	■ X	■ –
■ Filtered display of selectable tools	■ X	■ –
■ Sorting function	■ X	■ –
■ Column names	■ Sometimes with _	■ Sometimes with **-**
■ Copy function: Overwriting relevant tool data	■ X	■ X
■ Form view	■ Switchover with Screen Layout key	■ Switchover by soft key
■ Exchange of tool table between TNC 640 and iTNC 530	■ X	■ Not possible
Touch probe table for managing different 3-D touch probes	X	–
Creating tool-usage file, checking the availability	X	X
Cutting data calculator: Automatic calculation of spindle speed and feed rate	Simple cutting data calculator	Using stored technology tables
Define any tables	■ Freely definable tables (.TAB files) ■ Reading and writing with FN functions ■ Definable via config. data ■ Table names must start with a letter ■ Reading and writing with SQL functions	■ Freely definable tables (.TAB files) ■ Reading and writing with FN functions

Function	TNC 640	iTNC 530
Constant contouring speed relative to the path of the tool center or relative to the tool's cutting edge	X	X
Parallel operation: Creating programs while another program is being run	X	X
Programming of counter axes	X	X
Tilting the working plane (Cycle 19, PLANE function)	X, option 8	X, option 8
Machining with a rotary table:		
■ Programming of cylindrical contours as if in two axes		
■ Cylindrical surface (Cycle 27)	■ X, option 8	■ X, option 8
■ Cylinder surface, slot (Cycle 28)	■ X, option 8	■ X, option 8
■ Cylinder surface, ridge (Cycle 29)	■ X, option 8	■ X, option 8
■ Cylinder surface, external contour (Cycle 39)	■ X, option 8	■ X, option 8
■ Feed rate in mm/min or rev/min	■ X, option 8	■ X, option 8
Traverse in tool-axis direction		
■ Manual operation (3-D ROT menu)	■ X	■ X, FCL2 function
■ During program interruption	■ X	■ X
■ With handwheel superimpositioning	■ X	■ X, option #44
Approaching and departing the contour: Via a straight line or arc	X	X
Entry of feed rates:		
■ **F** (mm/min), rapid traverse **FMAX**	■ X	■ X
■ **FU** (feed per revolution mm/1)	■ –	■ X
■ **FZ** (tooth feed rate)	■ –	■ X
■ **FT** (time in seconds for path)	■ –	■ X
■ **FMAXT** (only for active rapid traverse potentiometer: time in seconds for path)	■ –	■ X
FK free contour programming		
■ Programming for workpiece drawings not dimensioned for NC programming	■ X	■ X
■ Conversion of FK program to conversational dialog	■ –	■ X
Program jumps:		
■ Maximum number of label numbers	■ 9999	■ 1000
■ Subprograms	■ X	■ X
■ Nesting depth for subprograms	■ 20	■ 6
■ Program section repetitions	■ X	■ X
■ Any desired program as subroutine	■ X	■ X

19.5 Functions of the TNC 640 and the iTNC 530 compared

Function	TNC 640	iTNC 530
Q parameter programming:		
■ Standard mathematical functions	■ X	■ X
■ Formula entry	■ X	■ X
■ String processing	■ X	■ X
■ Local Q parameters **QL**	■ X	■ X
■ Nonvolatile Q parameters **QR**	■ X	■ X
■ Changing parameters during program interruption	■ X	■ X
■ FN15:PRINT	■ –	■ X
■ FN25:PRESET	■ –	■ X
■ FN26:TABOPEN	■ X	■ X
■ FN27:TABWRITE	■ X	■ X
■ FN28:TABREAD	■ X	■ X
■ FN29: PLC LIST	■ X	■ –
■ FN31: RANGE SELECT	■ –	■ X
■ FN32: PLC PRESET	■ –	■ X
■ FN37:EXPORT	■ X	■ –
■ FN38: SEND	■ X	■ X
■ Saving file externally with **FN16**	■ X	■ X
■ **FN16** formatting: Left-aligned, right-aligned, string lengths	■ X	■ X
■ Writing to LOG file with **FN16**	■ X	■ –
■ Displaying parameter contents in the additional status display	■ X	■ –
■ Displaying parameter contents during programming (Q-INFO)	■ X	■ X
■ **SQL** functions for writing and reading tables	■ X	■ –

Function	TNC 640	iTNC 530
Graphic support		
■ 2-D programming graphics	■ X	■ X
■ REDRAW function	■ –	■ X
■ Show grid lines as the background	■ X	■ –
■ 3-D line graphics	■ X	■ X
■ Test graphics (plan view, projection on 3 planes, 3-D view)	■ X	■ X
■ High-resolution view	■ X	■ X
■ Tool display	■ X	■ X
■ Adjusting the simulation speed	■ X	■ X
■ Coordinates of line intersection for projection in 3 planes	■ –	■ X
■ Expanded zoom functions (mouse operation)	■ X	■ X
■ Displaying frame for workpiece blank	■ X	■ X
■ Displaying the depth value in plan view during mouse-over	■ –	■ X
■ Targeted stop of test run (STOP AT N)	■ –	■ X
■ Factor in tool change macro	■ –	■ X
■ Program run graphics (plan view, projection in 3 planes, 3-D view)	■ X	■ X
■ High-resolution view	■ X	■ X

19.5 Functions of the TNC 640 and the iTNC 530 compared

Function	TNC 640	iTNC 530
Datum tables: Storing workpiece-specific datums	X	X
Preset table: for saving reference points (presets)	X	X
Pallet management		
■ Support of pallet files	■ X	■ X
■ Tool-oriented machining	■ –	■ X
■ Pallet preset table: Managing pallet datums	■ –	■ X
Returning to the contour		
■ With mid-program startup	■ X	■ X
■ After program interruption	■ X	■ X
Auto-start function	X	X
Teach-in: Actual positions can be transferred to an NC program	X	X
Enhanced file management		
■ Creating multiple directories and subdirectories	■ X	■ X
■ Sorting function	■ X	■ X
■ Mouse operation	■ X	■ X
■ Selection of target directory by soft key	■ X	■ X
Programming aids:		
■ Help graphics for cycle programming	■ X	■ X
■ Animated help graphics when **PLANE/PATTERN DEF** function is selected	■ X	■ X
■ Help graphics for **PLANE/PATTERN DEF**	■ X	■ X
■ Context-sensitive help function for error messages	■ X	■ X
■ **TNCguide**, browser-based help system	■ X	■ X
■ Context-sensitive call of help system	■ X	■ X
■ Calculator	■ X (scientific)	■ X (standard)
■ Comment blocks in NC program	■ X	■ X
■ Structure blocks in NC program	■ X	■ X
■ Structure view in test run	■ –	■ X
Dynamic Collision Monitoring (DCM):		
■ Collision monitoring in Automatic operation	■ X, option 40	■ X, option 40
■ Collision monitoring in Manual operation	■ X, option 40	■ X, option 40
■ Graphic depiction of the defined collision objects	■ X, option 40	■ X, option 40
■ Collision checking in test run	■ –	■ X, option 40
■ Fixture monitoring	■ –	■ X, option 40
■ Tool carrier management	■ X	■ X, option 40

Function	TNC 640	iTNC 530
CAM support:		
■ Loading of contours from DXF data	■ X, option 42	■ X, option 42
■ Loading of machining positions from DXF data	■ X, option 42	■ X, option 42
■ Offline filter for CAM files	■ –	■ X
■ Stretch filter	■ X	■ –
MOD functions:		
■ User parameters	■ Config data	■ Numerical structure
■ OEM help files with service functions	■ –	■ X
■ Data medium inspection	■ –	■ X
■ Load service packs	■ –	■ X
■ Setting the system time	■ X	■ X
■ Specify the axes for actual position capture	■ –	■ X
■ Definition of traverse range limits	■ X	■ X
■ Restricting external access	■ X	■ X
■ Switching the kinematics	■ X	■ X
Calling fixed cycles:		
■ With **M99** or **M89**	■ X	■ X
■ With **CYCL CALL**	■ X	■ X
■ With **CYCL CALL PAT**	■ X	■ X
■ With **CYC CALL POS**	■ X	■ X
Special functions:		
■ Create reverse program	■ –	■ X
■ Datum shift with **TRANS DATUM**	■ X	■ X
■ Adaptive Feed Control AFC	■ X, option 45	■ X, option 45
■ Global definition of cycle parameters: **GLOBAL DEF**	■ X	■ X
■ Pattern definition with **PATTERN DEF**	■ X	■ X
■ Definition and processing of point tables	■ X	■ X
■ Simple contour formula **CONTOUR DEF**	■ X	■ X
Functions for large molds and dies:		
■ Global program settings (GS)	■ –	■ X, option 44
■ Expanded **M128**: **FUNCTION TCPM**	■ X	■ X

19.5 Functions of the TNC 640 and the iTNC 530 compared

Function	TNC 640	iTNC 530
Status displays:		
■ Positions, spindle speed, feed rate	■ X	■ X
■ Larger depiction of position display, Manual operation	■ X	■ X
■ Additional status display, form view	■ X	■ X
■ Display of the handwheel path during machining with handwheel superimposing	■ X	■ X
■ Display of distance-to-go in a tilted system	■ X	■ X
■ Dynamic display of Q-parameter contents, definable number ranges	■ X	■ –
■ Machine manufacturer-specific additional status display via Python	■ X	■ X
■ Graphic display of residual run time	■ –	■ X
Individual color settings of user interface	–	X

Comparator: Cycles

Cycle	TNC 640	iTNC 530
1 **PECKING**	X	X
2 **TAPPING**	X	X
3 **SLOT MILLING**	X	X
4 **POCKET MILLING**	X	X
5 **CIRCULAR POCKET**	X	X
6 **ROUGH-OUT** (SL I, recommended: SL II, Cycle 22)	–	X
7 **DATUM SHIFT**	X	X
8 **MIRROR IMAGE**	X	X
9 **DWELL TIME**	X	X
10 **ROTATION**	X	X
11 **SCALING**	X	X
12 **PGM CALL**	X	X
13 **ORIENTATION**	X	X
14 **CONTOUR GEOMETRY**	X	X
15 **PILOT DRILLING** (SL I, recommended: SL II, Cycle 21)	–	X
16 **CONTOUR MILLING**(SL I, recommended: SL II, Cycle 24)	–	X
17 **RIGID TAPPING**	X	X
18 **THREAD CUTTING**	X	X
19 **WORKING PLANE**	X, option 8	X, option 8
20 **CONTOUR DATA**	X	X
21 **PILOT DRILLING**	X	X
22 **ROUGH-OUT**	X	X
23 **FLOOR FINISHING**	X	X
24 **SIDE FINISHING**	X	X
25 **CONTOUR TRAIN**	X	X
26 **AXIS-SPECIFIC SCALING**	X	X
27 **CYLINDER SURFACE**	X, option 8	X, option 8
28 **CYLINDER SURFACE**	X, option 8	X, option 8
29 **CYL SURFACE RIDGE**	X, option 8	X, option 8
30 **RUN CAM DATA**	–	X
32 **TOLERANCE**	X	X
39 **CYL. SURFACE CONTOUR**	X, option 8	X, option 8
200 **DRILLING**	X	X
201 **REAMING**	X	X
202 **BORING**	X	X
203 **UNIVERSAL DRILLING**	X	X
204 **BACK BORING**	X	X

19.5 Functions of the TNC 640 and the iTNC 530 compared

Cycle	TNC 640	iTNC 530
205 **UNIVERSAL PECKING**	X	X
206 **TAPPING**	X	X
207 **RIGID TAPPING**	X	X
208 **BORE MILLING**	X	X
209 **TAPPING W/ CHIP BRKG**	X	X
210 **SLOT RECIP. PLNG**	X	X
211 **CIRCULAR SLOT**	X	X
212 **POCKET FINISHING**	X	X
213 **STUD FINISHING**	X	X
214 **C. POCKET FINISHING**	X	X
215 **C. STUD FINISHING**	X	X
220 **POLAR PATTERN**	X	X
221 **CARTESIAN PATTERN**	X	X
225 **ENGRAVING**	X	X
230 **MULTIPASS MILLING**	X	X
231 **RULED SURFACE**	X	X
232 **FACE MILLING**	X	X
233 **FACE MILLING**	X	–
239 **ASCERTAIN THE LOAD**	X, option 143	–
240 **CENTERING**	X	X
241 **SINGLE-LIP D.H.DRLNG**	X	X
247 **DATUM SETTING**	X	X
251 **RECTANGULAR POCKET**	X	X
252 **CIRCULAR POCKET**	X	X
253 **SLOT MILLING**	X	X
254 **CIRCULAR SLOT**	X	X
256 **RECTANGULAR STUD**	X	X
257 **CIRCULAR STUD**	X	X
258 **TOLERANCE**	X	–
262 **THREAD MILLING**	X	X
263 **THREAD MLLNG/CNTSNKG**	X	X
264 **THREAD DRILLNG/MLLNG**	X	X
265 **HEL. THREAD DRLG/MLG**	X	X
267 **OUTSIDE THREAD MLLNG**	X	X
270 **CONTOUR TRAIN DATA** for defining the behavior of Cycle 25	X	X
275 **TROCHOIDAL SLOT**	X	X
276 **THREE-D CONT. TRAIN**	–	X
290 **INTERPOLATION TURNING**	–	X, option 96

Cycle	TNC 640	iTNC 530
291 **COUPLG.TURNG.INTERP.**	X, option 96	–
292 **CONTOUR.TURNG.INTRP.**	X, option 96	–
800 **ADJUST XZ SYSTEM**	X, option 50	–
801 **RESET ROTARY COORDINATE SYSTEM**	X, option 50	–
810 **TURN CONTOUR LONG.**	X, option 50	–
811 **SHOULDER, LONGITDNL.**	X, option 50	–
812 **SHOULDER, LONG. EXT.**	X, option 50	–
813 **TURN PLUNGE CONTOUR LONGITUDINAL**	X, option 50	–
814 **TURN PLUNGE LONGITUDINAL EXT.**	X, option 50	–
815 **CONTOUR-PAR. TURNING**	X, option 50	–
820 **TURN CONTOUR TRANSV.**	X, option 50	–
821 **SHOULDER, FACE**	X, option 50	–
822 **SHOULDER, FACE. EXT.**	X, option 50	–
823 **TURN TRANSVERSE PLUNGE**	X, option 50	–
824 **TURN PLUNGE TRANSVERSE EXT.**	X, option 50	–
830 **THREAD CONTOUR-PARALLEL**	X, option 50	–
831 **THREAD LONGITUDINAL**	X, option 50	–
832 **THREAD EXTENDED**	X, option 50	–
840 **RECESS TURNG, RADIAL**	X, option 50	–
841 **SIMPLE REC. TURNG., RADIAL DIR.**	X, option 50	–
842 **ENH.REC.TURNNG, RAD.**	X, option 50	–
850 **RECESS TURNG, AXIAL**	X, option 50	–
851 **SIMPLE REC TURNG, AX**	X, option 50	–
852 **ENH.REC.TURNING, AX.**	X, option 50	–
860 **CONT. RECESS, RADIAL**	X, option 50	–
861 **SIMPLE RECESS, RADL.**	X, option 50	–
862 **EXPND. RECESS, RADL.**	X, option 50	–
870 **CONT. RECESS, AXIAL**	X, option 50	–
871 **SIMPLE RECESS, AXIAL**	X, option 50	–
872 **EXPND. RECESS, AXIAL**	X, option 50	–
880 **GEAR HOBBING**	X, option 131	–
892 **CHECK IMBALANCE**	X, option 50	–

Comparison: Miscellaneous functions

M	Effect	TNC 640	iTNC 530
M00	Program STOP/Spindle STOP/Coolant OFF	X	X
M01	Optional program STOP	X	X
M02	Stop program/Spindle STOP/Coolant OFF/ Clear status display (depending on machine parameter)/Return jump to block 1	X	X
M03 M04 M05	Spindle ON clockwise Spindle ON counterclockwise Spindle STOP	X	X
M06	Tool change/Program run STOP (machine-specific function)/ Spindle STOP	X	X
M08 M09	Coolant ON Coolant OFF	X	X
M13 M14	Spindle ON clockwise/Coolant ON Spindle ON counterclockwise/Coolant on	X	X
M30	Same function as M02	X	X
M89	Free miscellaneous function **or** cycle call, modally effective (machine-specific function)	X	X
M90	Constant contouring speed at corners (not required at TNC 640)	–	X
M91	Within the positioning block: Coordinates are referenced to machine datum	X	X
M92	Within the positioning block: Coordinates are referenced to a position defined by machine manufacturer, e.g. tool change position	X	X
M94	Reduce the rotary axis display to a value below 360°	X	X
M97	Machine small contour steps	X	X
M98	Machine open contours completely	X	X
M99	Blockwise cycle call	X	X
M101 M102	Automatic tool change with replacement tool if maximum tool life has expired Reset M101	X	X
M103	Reduce feed rate during plunging to factor F (percentage)	X	X
M104	Reactivate most recently set datum	– (recommended: Cycle 247)	X
M105 M106	Machining with second k_v factor Machining with first k_v factor	–	X
M107 M108	Suppress error message for replacement tools with oversize Reset M107	X	X
M109 M110 M111	Constant contouring speed at cutting edge (feed rate increase and reduction) Constant contouring speed at cutting edge (only feed rate reduction) Reset M109/M110	X	X

M	Effect	TNC 640	iTNC 530
M112 M113	Enter contour transitions between any two contour transitions Reset M112	– (recommended: Cycle 32)	X
M114 M115	Automatic compensation of machine geometry when working with tilted axes Reset M114	– (recommended: M128, TCPM)	X, option 8
M116 M117	Feed rate on rotary tables in mm/min Reset M116	X, option 8	X, option 8
M118	Superimpose handwheel positioning during program run	X	X
M120	Pre-calculate the radius-compensated contour (LOOK AHEAD)	X	X
M124	Contour filter	– (possible via user parameters)	X
M126 M127	Shorter-path traverse of rotary axes Reset M126	X	X
M128 M129	Maintaining the position of the tool tip when positioning tilted axes (TCPM) Reset M128	X, option 9	X, option 9
M130	Within the positioning block: Points are referenced to the untilted coordinate system	X	X
M134 M135	Precision stop at non-tangential contour transitions when positioning with rotary axes Reset M134	–	X
M136 M137	Feed rate F in millimeters per spindle revolution Reset M136	X	X
M138	Selection of tilted axes	X	X
M140	Retraction from the contour in the tool-axis direction	X	X
M141	Suppress touch probe monitoring	X	X
M142	Delete modal program information	–	X
M143	Delete basic rotation	X	X
M144 M145	Compensating the machine's kinematic configuration for ACTUAL/NOMINAL positions at end of block Reset M144	X, option 9	X, option 9
M148 M149	Automatically retract tool from the contour at an NC stop Reset M148	X	X
M150	Suppress limit switch message	– (possible via FN 17)	X
M197	Rounding the corners	X	–
M200 -M204	Laser cutting functions	–	X

Compare: Touch probe cycles in Manual operation and Electric Handwheel operating modesElectronic handwheel

Cycle	TNC 640	iTNC 530
Touch-probe table for managing 3-D touch probes	X	–
Calibrating the effective length	X	X
Calibrating the effective radius	X	X
Measuring a basic rotation using a line	X	X
Setting the datum on any axis	X	X
Setting a corner as datum	X	X
Setting a circle center as datum	X	X
Setting a center line as datum	X	X
Measuring a basic rotation using two holes/cylindrical studs	X	X
Setting the datum using four holes/cylindrical studs	X	X
Setting the circle center using three holes/cylindrical studs	X	X
Determine and offset misalignment of a plane	X	–
Support of mechanical touch probes by manually capturing the current position	By soft key or hard key	By hard key
Write measurement values to the preset table	X	X
Write measurement values to the datum table	X	X

Comparison: Probing system cycles for automatic workpiece control

Cycle	TNC 640	iTNC 530
0 **REF. PLANE**	X	X
1 **POLAR DATUM**	X	X
2 **CALIBRATE TS**	–	X
3 **MEASURING**	X	X
4 **MEASURING IN 3-D**	X	X
9 **CALIBRATE TS LENGTH**	–	X
30 **CALIBRATE TT**	X	X
31 **CAL. TOOL LENGTH**	X	X
32 **CAL. TOOL RADIUS**	X	X
33 **MEASURE TOOL**	X	X
400 **BASIC ROTATION**	X	X
401 **ROT OF 2 HOLES**	X	X
402 **ROT OF 2 STUDS**	X	X
403 **ROT IN ROTARY AXIS**	X	X
404 **SET BASIC ROTATION**	X	X
405 **ROT IN C-AXIS**	X	X
408 **SLOT CENTER REF PT**	X	X
409 **RIDGE CENTER REF PT**	X	X
410 **DATUM INSIDE RECTAN.**	X	X
411 **DATUM OUTS. RECTAN.**	X	X
412 **DATUM INSIDE CIRCLE**	X	X
413 **DATUM OUTSIDE CIRCLE**	X	X
414 **DATUM OUTSIDE CORNER**	X	X
415 **DATUM INSIDE CORNER**	X	X
416 **DATUM CIRCLE CENTER**	X	X
417 **DATUM IN TS AXIS**	X	X
418 **DATUM FROM 4 HOLES**	X	X
419 **DATUM IN ONE AXIS**	X	X
420 **MEASURE ANGLE**	X	X
421 **MEASURE HOLE**	X	X
422 **MEAS. CIRCLE OUTSIDE**	X	X
423 **MEAS. RECTAN. INSIDE**	X	X
424 **MEAS. RECTAN. OUTS.**	X	X
425 **MEASURE INSIDE WIDTH**	X	X
426 **MEASURE RIDGE WIDTH**	X	X
427 **MEASURE COORDINATE**	X	X

19.5 Functions of the TNC 640 and the iTNC 530 compared

Cycle	TNC 640	iTNC 530
430 **MEAS. BOLT HOLE CIRC**	X	X
431 **MEASURE PLANE**	X	X
440 **MEASURE AXIS SHIFT**	–	X
441 **FAST PROBING**	Sometimes possible via touch probe table	X
450 **SAVE KINEMATICS**	X, option 48	X, option 48
451 **MEASURE KINEMATICS**	X, option 48	X, option 48
452 **PRESET COMPENSATION**	X, option 48	X, option 48
460 **CALIBRATION OF TS ON A SPHERE**	X	X
461 **TS CALIBRATION OF TOOL LENGTH**	X	X
462 **CALIBRATION OF A TS IN A RING**	X	X
463 **TS CALIBRATION ON STUD**	X	X
480 **CALIBRATE TT**	X	X
481 **CAL. TOOL LENGTH**	X	X
482 **CAL. TOOL RADIUS**	X	X
483 **MEASURE TOOL**	X	X
484 **CALIBRATE IR TT**	X	X
600 **GLOBAL WORKING SPACE**	X, option 136	–
601 **LOCAL WORKING SPACE**	X, option 136	–

Comparison: Differences in programming

Function	TNC 640	iTNC 530
Switching the operating mode while a block is being edited	Permitted	Permitted
File handling:		
■ **Save file** function	■ Available	■ Available
■ **Save file as** function	■ Available	■ Available
■ Discard changes	■ Available	■ Available
File management:		
■ Mouse operation	■ Available	■ Available
■ Sorting function	■ Available	■ Available
■ Entry of name	■ Opens the **Select file** pop-up window	■ Synchronizes the cursor
■ Support of key combinations	■ Not available	■ Available
■ Favorites Management	■ Not available	■ Available
■ Configuration of column structure	■ Not available	■ Available
■ Soft-key arrangement	■ Slightly different	■ Slightly different

Function	TNC 640	iTNC 530
Skip block function	Available	Available
Selecting a tool from the table	Selection via split-screen menu	Selection in a pop-up window
Programming special functions with the **SPEC FCT** key	Pressing the key opens a soft-key row as a submenu. To exit the submenu, press the **SPEC FCT** key again; then the TNC shows the last active soft-key row	Pressing the key adds the soft-key row as the last row. To exit the menu, press the **SPEC FCT** key again; then the TNC shows the last active soft-key row
Programming approach and departure motions with the **APPR DEP** key	Pressing the key opens a soft-key row as a submenu. To exit the submenu, press the **APPR DEP** key again; then the TNC shows the last active soft-key row	Pressing the key adds the soft-key row as the last row. To exit the menu, press the **APPR DEP** key again; then the TNC shows the last active soft-key row
Pressing the **END** hard key while the **CYCLE DEF** and **TOUCH PROBE** menus are active	Terminates the editing process and calls the file manager	Exits the respective menu
Calling the file manager while the **CYCLE DEF** and **TOUCH PROBE** menus are active	Terminates the editing process and calls the file manager. The respective soft-key row remains selected when the file manager is exited	Error message **Key non-functional**
Calling the file manager while **CYCL CALL**, **SPEC FCT**, **PGM CALL** and **APPR/DEP** menus are active	Terminates the editing process and calls the file manager. The respective soft-key row remains selected when the file manager is exited	Terminates the editing process and calls the file manager. The basic soft-key row is selected when the file manager is exited

19.5 Functions of the TNC 640 and the iTNC 530 compared

Function	TNC 640	iTNC 530
Datum table:		
■ Sorting function by values within an axis	■ Available	■ Not available
■ Resetting the table	■ Available	■ Not available
■ Hiding axes that are not present	■ Available	■ Available
■ Switching the list/form view	■ Switchover via split-screen key	■ Switchover by toggle soft key
■ Inserting individual line	■ Allowed everywhere, renumbering possible after request. Empty line is inserted, must be filled with zeros manually	■ Only allowed at the end of the table. Line with value 0 in all columns is inserted
■ Transfer of actual position values on individual axis to the datum table using the keys	■ Not available	■ Available
■ Transfer of actual position values on all active axes to the datum table using the keys	■ Not available	■ Available
■ Capturing the last positions measured by TS using the keys	■ Not available	■ Available
FK free contour programming:		
■ Programming of parallel axes	■ With X/Y coordinates, independent of machine type; switchover with **FUNCTION PARAXMODE**	■ Machine-dependent with the existing parallel axes
■ Automatic correction of relative references	■ Relative references in contour subprograms are not corrected automatically	■ All relative references are corrected automatically

Function	TNC 640	iTNC 530
Handling of error messages:		
■ Help with error messages	■ Call via **ERR** key	■ Call via **HELP** key
■ Switching the operating mode while help menu is active	■ Help menu is closed when the operating mode is switched	■ Operating mode switchover is not allowed (key is non-functional)
■ Selecting the background operating mode while help menu is active	■ Help menu is closed when F12 is used for switching	■ Help menu remains open when F12 is used for switching
■ Identical error messages	■ Are collected in a list	■ Are displayed only once
■ Acknowledgment of error messages	■ Every error message (even if it is displayed more than once) must be acknowledged, the **Delete all** function is available	■ Error message to be acknowledged only once
■ Access to protocol functions	■ Log and powerful filter functions (errors, keystrokes) are available	■ Complete log without filter functions available
■ Saving service files	■ Available. No service file is created when the system crashes	■ Available. A service file is automatically created when the system crashes

19.5 Functions of the TNC 640 and the iTNC 530 compared

Function	TNC 640	iTNC 530
Find function:		
■ List of words recently searched for	■ Not available	■ Available
■ Show elements of active block	■ Not available	■ Available
■ Show list of all available NC blocks	■ Not available	■ Available
Starting the search function with the up/down arrow keys when highlighted	Works up to max. 100,000 blocks, can be set via configuration datum	No limitation regarding program length
Programming graphics:		
■ True-to-scale display of grid	■ Available	■ Not available
■ Editing contour subprograms in SLII cycles with **AUTO DRAW ON**	■ If error messages occur, the cursor is on the **CYCL CALL** block in the main program	■ If error messages occur, the cursor is on the block in the contour subprogram responsible for the error
■ Moving the zoom window	■ Repeat function not available	■ Repeat function available
Programming minor axes:		
■ Syntax **FUNCTION PARAXCOMP**: Define the behavior of the display and the paths of traverse	■ Available	■ Not available
■ Syntax **FUNCTION PARAXMODE**: Define the assignment of the parallel axes to be traversed	■ Available	■ Not available
Programming OEM cycles		
■ Access to table data	■ Via **SQL** commands and via **FN17/FN18** or **TABREAD-TABWRITE** functions	■ Via **FN17/FN18** or **TABREAD-TABWRITE** functions
■ Access to machine parameters	■ With the **CFGREAD** function	■ Via **FN18** functions
■ Creating interactive cycles with **CYCLE QUERY**, e.g. touch probe cycles in Manual Operation	■ Available	■ Not available

Comparison: Differences in Test Run, functionality

Function	TNC 640	iTNC 530
Test Run up to block N	Function not available	Function available
Entering a program with the **GOTO** key	Function only possible if the **START SINGLE** soft key was not pressed	Function also possible after **START SINGLE**
Calculation of machining time	Each time the simulation is repeated by pressing the START soft key, the machining time is totaled	Each time the simulation is repeated by pressing the START soft key, time calculation starts at 0
Single block	With point pattern cycles and **CYCL CALL PAT**, the control stops after each point	Point pattern cycles and **CYCL CALL PAT** are handled by the control as a single block

Comparison: Differences in Test Run, operation

Function	TNC 640	iTNC 530
Arrangement of soft-key rows and soft keys within the rows	Arrangement of soft-key rows and soft-keys varies depending on the active screen layout.	
Zoom function	Each sectional plane can be selected by individual soft keys	Sectional plane can be selected via three toggle soft keys
Machine-specific miscellaneous functions M	Lead to error messages if they are not integrated in the PLC	Are ignored during Test Run
Displaying/editing the tool table	Function available via soft key	Function not available
3-D view: Transparent display of workpiece	Available	Function not available
3-D view: Transparent display of workpiece	Available	Function not available
3-D view: Display tool path	Available	Function not available
Adjustable model quality	Available	Function not available

Comparison: Differences in Manual Operation, functionality

Function	TNC 640	iTNC 530
Jog increment function	The jog increment can be defined separately for linear and rotary axes	The jog increment applies for both linear and rotary axes
Preset table	Basic transformation (translation and rotation) of machine table system to workpiece system via the **X**, **Y** and **Z** columns, as well as spatial angles **SPA**, **SPB** and **SPC**. In addition, the **X_OFFS** to **W_OFFS** columns can be used to define the axis offset of each individual axis. The function of the axis offsets can be configured.	Basic transformation (translation) of machine table system to workpiece system via the columns **X**, **Y** and **Z**, as well as a **ROT** basic rotation in the working plane (rotation). In addition, columns **A** to **W** can be used to define datums on the rotary and parallel axes.
Behavior when setting datums	Presetting in a rotary axis has the same effect as an axis offset. The offset is also effective for kinematics calculations and for tilting the working plane. The machine parameter **presetToAlignAxis** (no. 300203) is used to define whether the axis offset is to be taken into account internally after datum setting. Independently of this, an axis offset has always the following effects: ■ An axis offset always influences the nominal position display of the affected axis (the axis offset is subtracted from the current axis value). ■ If a rotary axis coordinate is programmed in an straight line block, then the axis offset is added to the programmed coordinate.	Rotary axis offsets defined by machine parameters do not influence the axis positions that were defined in the Tilt working plane function. MP7500 bit 3 defines whether the current rotary axis position referenced to the machine datum is taken into account, or whether a position of 0° is assumed for the first rotary axis (usually the C axis).
Handling of preset table:		
■ Preset tables that depend on the range of traverse	■ Not available	■ Available
Definition of feed-rate limitation	Feed-rate limitation can be defined separately for linear and rotary axes	Only one feed-rate limitation can be defined for linear and rotary axes

Comparison: Differences in Manual Operation, operation

Function	TNC 640	iTNC 530
Capturing the position values from mechanical probes	Confirm actual position with a soft key or hard key	Actual-position capture by hard key
Exiting the Touch Probe Functions menu	Using the **END** soft key or the **END** hard key	Using the **END** soft key or the **END** hard key

Comparison: Differences in Program Run, operation

Function	TNC 640	iTNC 530
Arrangement of soft-key rows and soft keys within the rows	Arrangement of soft-key rows and soft-keys differs according to the active screen layout.	
Operating mode switchover after program run has been suspended by switching to the **Program run, single block** operating mode and canceled with **INTERNAL STOP**	When you return to the **Program run, full sequence** operating mode: error message **Current block not selected**. Use the block to select the point of interruption	Switching the operating mode is allowed, modal information is saved, program run can be continued by pressing NC start
GOTO is used to go to FK sequences after program run was interrupted there before switching the operating mode	Error message **FK programming: Undefined starting position**	GOTO allowed
Mid-program startup:		
Switching the screen layout for mid-program startup	Only possible, if startup position has already been approached	Possible in all operating states
Error messages	Error messages are still active after the error has been corrected and must be acknowledged separately	Error messages are sometimes acknowledged automatically after the error has been corrected
Point patterns in single block	With point pattern cycles and **CYCL CALL PAT**, the control stops after each point.	Point pattern cycles and **CYCL CALL PAT** are handled by the control as a single block

Comparison: Differences in Program Run, traverse movements

Caution: Check the traverse movements!

NC programs that were created on earlier TNC controls may lead to different traverse movements or error messages on a TNC 640!

Be sure to take the necessary care and caution when running-in programs!

Please find a list of known differences below. The list does not pretend to be complete!

Function	TNC 640	iTNC 530
Handwheel-superimposed traversing with **M118**	Effective in the active coordinate system (which may also be rotated or tilted), or in the machine-based coordinate system, depending on the setting in the 3-D ROT menu for manual operation	Effective in the machine-based coordinate system
Deleting basic rotation with **M143**	**M143** deletes the entries in columns **SPA**, **SPB** and **SPC** in the preset table, reactivating the corresponding preset table row does **not** activate the deleted basic rotation	**M143** does **not** delete the entry in the **ROT** column in the preset table, reactivating the corresponding preset table row does not activate the deleted basic rotation
Scaling approach/departure movements (**APPR/DEP/RND**)	Axis-specific scaling factor is allowed, radius is not scaled	Error message
Approach/departure with **APPR/DEP**	Error message if **R0** is programmed for **APPR/DEP LN** or **APPR/DEP CT**	Tool radius 0 and compensation direction **RR** are assumed
Approach/departure with **APPR/DEP** if contour elements with length 0 are defined	Contour elements with length 0 are ignored. The approach/departure movements are calculated for the first or last valid contour element	An error message is issued if a contour element with length 0 is programmed after the **APPR** block (relative to the first contour point programmed in the APPR block) For a contour element with length 0 before a **DEP** block, the TNC does not issue an error message, but uses the last valid contour element to calculate the departure movement

Function	TNC 640	iTNC 530
Effect of Q parameters	**Q60** to **Q99** (or **QS60** to **QS99**) are always local	**Q60** to **Q99** (or **QS60** to **QS99**) are local or global, depending on MP7251 in converted cycle programs (.cyc). Nested calls may cause problems
Automatic cancelation of tool radius compensation	■ Block with **R0** ■ **DEP** block ■ **END PGM**	■ Block with **R0** ■ **DEP** block ■ **PGM CALL** ■ Programming of Cycle 10 **ROTATION** ■ Program selection
NC blocks with **M91**	No consideration of tool radius compensation	Consideration of tool radius compensation
Behavior with **M120 LA1**	No effect on processing, as the control interprets the input internally as an **LA0**	Possible undesired effect on processing, as the control interprets the entry internally as an **LA2**
Tool form compensation	Tool shape compensation is not supported, because this type of programming is considered to be axis-value programming, and the basic assumption is that axes do not form a Cartesian coordinate system	Tool shape compensation is supported
Block scan in a point table	The tool is positioned above the next position to be machined	The tool is positioned above the last position that has been completely machined
Empty **CC** block (pole of last tool position is used) in NC program	Last positioning block in the working plane must contain both coordinates of the working plane	Last positioning block in the working plane does not necessarily need to contain both coordinates of the working plane. Can cause problems with **RND** or **CHF** blocks
Axis-specific scaling of **RND** block	**RND** block is scaled, the result is an ellipse	Error message is issued
Reaction if a contour element with length 0 is defined before or after a **RND** or **CHF** block	Error message is issued	Error message is issued if a contour element with length 0 is located before the **RND** or **CHF** block Contour element with length 0 is ignored if the contour element with length 0 is located after the **RND** or **CHF** block

19.5 Functions of the TNC 640 and the iTNC 530 compared

Function	TNC 640	iTNC 530
Circle programming with polar coordinates	The incremental rotation angle **IPA** and the direction of rotation **DR** must have the same sign. Otherwise, an error message will be issued	The algebraic sign of the direction of rotation is used if the sign defined for **DR** differs from the one defined for **IPA**
Tool radius compensation on circular arc or helix with angular length = 0	The transition between the adjacent elements of the arc/helix is generated. Also, the tool axis motion is executed right before this transition. If the element is the first or last element to be corrected, the next or previous element is dealt with in the same way as the first or last element to be corrected	The equidistant line of the arc/helix is used for generating the tool path
Compensation of tool length in the position display	The values **L** and **DL** from the tool table and the value **DL** from the **TOOL CALL** are taken into account in the position display	The values **L** and **DL** from the tool table are taken into account in the position display
Traverse movement in spacial arc	Error message is issued	No restrictions
SLII Cycles 20 to 24:		
■ Number of definable contour elements	■ Max. 16384 blocks in up to 12 subcontours	■ Max. 8192 contour elements in up to 12 subcontours, no restrictions for subcontour
■ Define the working plane	■ Tool axis in **TOOL CALL** block defines the working plane	■ The axes of the first positioning block in the first subcontour define the working plane
■ Position at end of SL cycle	■ With the parameter **posAfterContPocket** (no. 201007), you can define whether the end position is above the last programmed position, or whether the tool moves only to clearance height	■ With MP7420, you can define whether the end position is above the last programmed position, or whether the tool moves only to clearance height

Function	TNC 640	iTNC 530
SLII Cycles 20 to 24:		
■ Handling of islands that are not contained in pockets	■ Cannot be defined with complex contour formula	■ Restricted definition in complex contour formula is possible
■ Set operations for SL cycles with complex contour formulas	■ Real set operation possible	■ Only restricted performance of real set operation possible
■ Radius compensation is active during **CYCL CALL**	■ Error message is issued	■ Radius compensation is canceled, program is executed
■ Paraxial positioning blocks in contour subprogram	■ Error message is issued	■ Program is executed
■ Miscellaneous functions **M** in contour subprogram	■ Error message is issued	■ M functions are ignored
■ **M110** (feed-rate reduction for inside corner)	■ Function does not work within SL cycles	■ Function also works within SL cycles
Cylinder surface machining in general:		
■ Contour definition	■ With X/Y coordinates, independent of machine type	■ Machine-dependent, with existing rotary axes
■ Offset definition on cylinder surface	■ With datum shift in X/Y, regardless of machine type	■ Machine-specific datum shift in rotary axes
■ Offset definition for basic rotation	■ Function available	■ Function not available
■ Circle programming with C/CC	■ Function available	■ Function not available
■ **APPR**/**DEP** blocks in contour definition	■ Function not available	■ Function available
Cylinder surface machining with Cycle 28:		
■ Complete roughing-out of slot	■ Function available	■ Function not available
■ Definable tolerance	■ Function available	■ Function available
Cylinder surface machining with Cycle 29	Direct plunging to contour of ridge	Circular approach to contour of ridge
Cycles 25x for pockets, studs and slots:		
■ Plunging movements	In limit ranges (geometrical conditions of tool/contour) error messages are triggered if plunging movements lead to unreasonable/ critical behavior	In limit ranges (geometrical conditions of tool/contour), vertical plunging is used if required

19.5 Functions of the TNC 640 and the iTNC 530 compared

Function	TNC 640	iTNC 530
PLANE function:		
■ **TABLE ROT/COORD ROT** not defined	■ Configured setting is used	■ **COORD ROT** is used
■ Machine is configured for axis angle	■ All **PLANE** functions can be used	■ Only **PLANE AXIAL** is executed
■ Programming an incremental spatial angle according to **PLANE AXIAL**	■ Error message is issued	■ Incremental spatial angle is interpreted as an absolute value
■ Programming an incremental axis angle according to **PLANE SPATIAL** if the machine is configured for spatial angle	■ Error message is issued	■ Incremental axis angle is interpreted as an absolute value
■ Programming of **PLANE** functions with active Cycle 8 **MIRROR IMAGE**	■ Mirroring has no influence on tilting using **AXIAL PLANE** and Cycle **19**	■ Function is available with all **PLANE** functions
■ Programming **TCPM AXIS SPAT** with active Cycle 8 **MIRROR IMAGE**	■ Error message is issued	■ Function available
Special functions for cycle programming:		
■ FN17	■ Function available, details are different	■ Function available, details are different
■ FN18	■ Function available, details are different	■ Function available, details are different
Compensation of tool length in the position display	The tool length entries **L** and **DL** from the tool table are taken into account in the position display, from **TOOL CALL** depending on the machine parameter **progToolCallDL** (no. 124501)	The tool length entries **L** and **DL** from the tool table are taken into account in the position display

Comparison: Differences in MDI operation

Function	TNC 640	iTNC 530
Execution of connected sequences	Function partially available	Function available
Saving modally effective functions	Function partially available	Function available

Comparison: Differences in programming station

Function	TNC 640	iTNC 530
Demo version	Programs with more than 100 NC blocks cannot be selected, an error message is issued	Programs can be selected, max. 100 NC blocks are displayed, further blocks are truncated in the display
Demo version	If nesting with PGM CALL results in more than 100 NC blocks, there is no test graphic display; an error message is not issued	Nested programs can be simulated
Copying NC programs	Copying to and from the directory **TNC:** is possible with Windows Explorer	TNCremo or file manager of programming station must be used for copying
Shifting the horizontal soft-key row	Clicking on the soft-key bar shifts one soft-key row to the right or left	Clicking any soft-key bar activates the respective soft-key row

19.6 DIN/ISO function overview

DIN/ISO Function Overview TNC 640

M functions	
M00 M01 M02	STOP program run/Spindle STOP/Coolant OFF Optional program STOP/Spindle STOP/Coolant OFF STOP program run/Spindle STOP/Coolant OFF/CLEAR status display (depending on machine parameter)/Return jump to block 1
M03 M04 M05	Spindle ON clockwise Spindle ON counterclockwise Spindle STOP
M06	Tool change/STOP program run (depending on machine parameter)/Spindle STOP
M08 M09	Coolant on Coolant off
M13 M14	Spindle ON clockwise /coolant ON Spindle ON counterclockwise/coolant on
M30	Same function as M02
M89	Vacant miscellaneous function or cycle call, modally effective (depending on MPs)
M99	Blockwise cycle call
M91 M92	Within the positioning block: Coordinates are referenced to machine datum Within the positioning block: Coordinates are referenced to position defined by machine tool builder, such as tool change position
M94	Reduce the rotary axis display to a value below 360°
M97 M98	Machine small contour steps Machine open contours completely
M109 M110 M111	constant contouring speed at cutting edge (feed rate increase and reduction) Constant contouring speed at cutting edge (only feed rate reduction) Reset M109/M110
M116 M117	Feed rate for angular axes in mm/min Reset M116
M118	Superimpose handwheel positioning during program run
M120	Pre-calculate the radius-compensated contour (LOOK AHEAD)
M126 M127	Shorter-path traverse of rotary axes: Reset M126
M128 M129	Maintaining the position of the tool tip when positioning with tilted axes (TCPM) Reset M128
M130	Within the positioning block: Points are referenced to the untilted coordinate system
M140	Retraction from the contour in the tool-axis direction
M141	Suppress touch probe monitoring
M143	Delete basic rotation
M148 M149	Automatically retract tool from the contour at an NC stop Reset M148

G functions

Tool movements	
G00	Straight-line interpolation, Cartesian, rapid traverse
G01	Straight-line interpolation, Cartesian
G02	Circle interpolation, Cartesian, clockwise
G03	Circle interpolation, Cartesian, counterclockwise
G05	Circle interpolation, Cartesian, without rotation direction specification
G06	Circle interpolation, Cartesian, tangential contour connection
G07*	Paraxial positioning block
G10	Straight-line interpolation, polar, rapid traverse
G11	Straight-line interpolation, polar
G12	Circle interpolation, polar, clockwise
G13	Circle interpolation, polar, counterclockwise
G15	Circle interpolation, polar, without rotation direction specification
G16	Circle interpolation, polar, tangential contour connection
Chamfer/Rounding/Approach contour/Depart contour	
G24*	Chamfers with chamfer side length R
G25*	Corner rounding with radius R
G26*	Tangential approach of a contour with radius R
G27*	Tangential exiting of a contour with radius R
Tool definition	
G99*	With tool number T, length L, radius R
Tool radius compensation	
G40	No tool radius compensation
G41	Tool path compensation, left of the contour
G42	Tool path compensation, right of the contour
G43	Paraxial compensation for G07, extension
G44	Paraxial compensation for G07, shortening
Blank form definition for graphics	
G30	(G17/G18/G19) Min. point
G31	(G90/G91) Max. point
Cycles for drilling, tapping and thread milling	
G240	Centering
G200	Drilling
G201	Reaming
G202	Boring
G203	Universal drilling
G204	Back boring
G205	Universal pecking
G206	Tapping with floating tap holder
G207	Rigid tapping
G208	Bore milling
G209	Tapping with chip breaking
G241	Single-lip deep-hole drilling

G functions	
Cycles for drilling, tapping and thread milling	
G262	Thread Milling
G263	Thread milling/countersinking
G264	Thread drilling/milling
G265	Helical thread drilling/milling
G267	Outside thread milling
Cycles for milling pockets, studs and slots	
G251	Rectangular pocket (complete)
G252	Circular pocket (complete)
G253	Slot (complete)
G254	Circular slot (complete)
G256	Rectangular stud
G257	Circular stud
Cycles for creating point patterns	
G220	Circular point patterns
G221	Linear point patterns
SL cycles, group 2	
G37	Contour, define subcontour subprogram numbers
G120	Define contour data (valid for G121 to G124)
G121	Pilot drilling
G122	Contour-parallel roughing out (roughing)
G123	Floor finishing
G124	Side finishing
G275	Trochoidal contour slot
G125	Contour train (machine open contours)
G127	Cylinder surface
G128	Cylinder surface slot milling
Coordinate transformation	
G53	Zero point shift from zero point tables
G54	Datum shift in program
G28	Contour mirroring
G73	Rotating the coordinate system
G72	Scaling factor, reducing/magnifying the contour
G80	Tilting the working plane
G247	Datum setting
Cycles for multipass milling	
G230	Clearing level surfaces
G231	Clearing any inclined surfaces
G232	Face milling
G233	Face milling, new
*) Non-modal function	
Touch probe cycles for measuring workpiece misalignment	
G400	Basic rotation from two points
G401	Basic rotation from two holes
G402	Basic rotation from two studs
G403	Compensating a basic rotation via a rotary axis
G404	Setting a basic rotation
G405	Compensating misalignment by the C axis

G functions

Touch probe cycles for datum setting	
G408	Slot center datum
G409	Ridge center datum
G410	Datum from inside of rectangle
G411	Datum from outside of rectangle
G412	Datum from inside of circle
G413	Datum from outside of circle
G414	Datum at outside corner
G415	Datum at inside corner
G416	Datum at circle center
G417	Datum in touch probe axis
G418	Datum at center of 4 holes
G419	Datum in any axis
Touch probe cycles for workpiece measurement	
G55	Measuring of any coordinates
G420	Measuring of any angle
G421	Measuring of bore
G422	Measuring of circular stud
G423	Measuring of rectangular pocket
G424	Measuring of rectangular stud
G425	Measuring of slot
G426	Measuring of ridge width
G427	Measuring of any coordinates
G430	Measuring of circle center
G431	Measuring of any plane
Touch probe cycles for tool measurement	
G480	Calibrating TT
G481	Measuring of tool length
G482	Measuring of tool radius
G483	Measuring of tool length and radius
Special cycles	
G04*	Dwell time with F seconds
G36	Spindle orientation
G39*	Program call
G62	Tolerance deviation for rapid contour milling
G440	Measuring axis shift
G441	Rapid probing
Define machining plane	
G17	Plane X/Y, tool axis Z
G18	Plane Z/X, tool axis Y
G19	Plane Y/Z, tool axis X
G20	Tool axis IV
Dimensions	
G90	Absolute dimensions
G91	Incremental dimensions
Unit of measure	
G70	Unit of measure: inch (set at start of program)
G71	Unit of measure: millimeter (set at start of program)

19.6 DIN/ISO function overview

G functions

Other G functions	
G29	Last position nominal value as pole (circle center)
G38	Program run STOP
G51*	Tool preselection (with central tool file)
G79*	Cycle call
G98*	Setting label number

*) Non-modal function

Addresses

%	Program start
%	Program call
#	Datum number with G53
A	Rotation around the X axis
B	Rotation around the Y axis
C	Rotation around the Z axis
D	Q-parameter definitions
DL	Wear compensation length with T
DR	Wear compensation radius with T
E	Tolerance with M112 and M124
F	Feed rate
F	Dwell time with G04
F	Scaling factor with G72
F	Factor F reduction with M103
G	G functions
H	Polar angle
H	Rotation angle with G73
H	Limit angle with M112
I	X coordinate of the circle center/pole
J	Y coordinate of the circle center/pole
K	Z coordinate of the circle center/pole
L	Setting a label number with G98
L	Jumping to a label number
L	Tool length with G99
M	M functions
N	Block number
P	Cycle parameter in machining cycles
P	Value or Q parameter in Q-parameter definition
Q	Q parameter
R	Polar coordinate radius
R	Circle radius with G02/G03/G05
R	Rounding radius with G25/G26/G27
R	Tool radius with G99
S	Spindle speed
S	Spindle orientation with G36

Addresses

T T T	Tool definition with G99 Tool call Next tool with G51
U V W	Axis parallel to X axis Axis parallel to Y axis Axis parallel to Z axis
X Y Z	X axis Y axis Z axis
*	End of block

Contour cycles

Sequence of program steps for machining with multiple tools

List of subcontour programs	G37 P01 ...
Define contour data	G120 Q1 ...
Drill define/call Contour cycle: Pilot drilling Cycle call	G121 Q10 ...
Roughing mill define/call Contour cycle: Rough-out Cycle call	G122 Q10 ...
Finishing mill define/call Contour cycle: Floor finishing Cycle call	G123 Q11 ...
Finishing mill define/call Contour cycle: Side finishing Cycle call	G124 Q11 ...
End of main program, return	**M02**
Contour subprograms	G98 ... G98 L0

Radius compensation of the contour subprograms

Contour	Programming sequence of the contour elements	Radius compensation
Internal (pocket)	Clockwise (CW) Counterclockwise (CCW)	G42 (RR) G41 (RL)
External (island)	Clockwise (CW) Counterclockwise (CCW)	G41 (RL) G42 (RR)

19.6 DIN/ISO function overview

Coordinate transformation

Coordinate transformation	Activate	Cancel
Datum shift	G54 X+20 Y+30 Z+10	G54 X0 Y0 Z0
Mirror image	G28 X	G28
Rotation	G73 H+45	G73 H+0
Scaling factor	G72 F 0.8	G72 F1
Working plane	G80 A+10 B+10 C+15	G80
Working plane	PLANE ...	PLANE RESET

Q-parameter definitions

D	Function
00	Assign
01	Addition
02	Subtraction
03	Multiplication
04	Division
05	Root
06	Sine
07	Cosine
08	Root from sum of square $c = \sqrt{(a^2+b^2)}$
09	If equal, jump to label number
10	If not equal, jump to label number
11	If larger, jump to label number
12	If smaller, jump to label number
13	Angle (angle from c sin a and c cos a)
14	Error number
15	Print
19	PLC assignment

Index

3

3-D basic rotation..... 536
3D compensation
  Peripheral Milling..... 454
3-D touch probes
  Calibration..... 527
3-D view..... 570

A

About this manual..... 6
ACC..... 405
Accessories..... 97
Actual position capture..... 111
Adaptive feed control..... 392
Adding comments..... 146, 148
Additional axes..... 101, 101
Additional axes for rotary axes. 446
Adjusting spindle speed..... 505
AFC..... 392
Align tool axis..... 444
Angle functions..... 305
Approach contour..... 213
ASCII Files..... 408
Automatic program start..... 593
Automatic tool measurement... 179

B

Basic rotation..... 535
  Measuring in Manual Operation mode..... 535
Behavior after receipt of ETX.... 612
Block..... 113
  Delete..... 113
Block check character..... 611

C

CAD Viewer..... 259
CAD viewer and DXF converter screen layout..... 258
Calculating with parentheses... 329
Calculation of circles..... 306
Calculator..... 150
Calling tool management..... 199
Camera..... 553
Chamfer..... 226
Chatter Control..... 405
Checking
  Setup situation..... 553
Checking setup situation..... 553
Checking the axis positions..... 508
Circle..... 230, 232, 238
Circle center..... 228
Circular path..... 229, 238
Code numbers..... 608
Collision monitoring..... 381
Comparison..... 657
Compensating workpiece misalignment
  By measuring two points on a straight surface..... 534
Condition of RTS line..... 611
Connecting/removing USB devices. 142
Connector pin layout for data interfaces..... 642
Context-sensitive help..... 165
Control panel..... 76
Conversational dialog..... 110
Copying program sections 114, 114

D

D14: Displaying error messages.... 311
D18: Reading system data..... 319
D19: Transfer values to the PLC..... 327
D20: NC and PLC synchronization..... 327
D26: TABOPEN: Open a freely definable table..... 415
D27: TABWRITE: Write to a freely definable table..... 415
D28: TABREAD: Read from a freely definable table..... 416
D29: Transfer values to the PLC..... 328
D37 EXPORT..... 328
Data Backup..... 118
Data interface..... 609
  Connector pin layouts..... 642
  Set up..... 609
Data output on the screen..... 318
Data transfer software..... 613
Data transmission
  Behavior after receipt of ETX.. 612
  Block check character..... 611
  Condition of RTS line..... 611
  Data bits..... 610
  File system..... 611
  Handshake..... 611
  Parity..... 610
  Protocol..... 610
  Software TNC server..... 612
  Stop bits..... 610
Data transmission rate..... 611
Datum setting..... 518
  Without 3-D touch probe..... 518
Datum table..... 525
  Transferring test results..... 525
DCM..... 381
Defining local Q parameters..... 301
Defining nonvolatile Q parameters.. 301
Defining the workpiece blank... 109
Depart contour..... 213
Dialog..... 110
Directory..... 119, 124
  Copy..... 127
  Create..... 124
  Delete..... 128
Displaying HTML files..... 134
Displaying Internet files..... 134
Display screen..... 75
Downloading help files..... 169
Dwell time..... 418, 419
DXF converter..... 260
  Selecting hole positions
    Icon..... 274
    Mouse area..... 273
  Setting a datum..... 265
Dynamic Collision Monitoring... 381

E

Enter spindle speed..... 187
Error messages..... 160, 160
  Help with..... 160
Ethernet interface..... 615
  Configuring..... 615
  Connecting and disconnecting network drives..... 141
  Connection options..... 615
  Introduction..... 615
External access..... 601
External data transfer..... 140

F

FCL..... 608
FCL function..... 11
Feature Content Level..... 11
Feed control, automatic..... 392
Feed rate..... 504
  Adjust..... 505
  On rotary axes, M116..... 446
Feed rate factor for plunging movements M103..... 364
Feed rate in millimeters per spindle revolution M136..... 365
File
  Create..... 124
File management..... 116, 119
  external data transfer..... 140
File Manager
  Calling..... 121
File manager
  Copying files..... 124
  Copying tables..... 126
  Delete file..... 128
  Directories..... 119
    Copy..... 127
    Create..... 124
  File
    Create..... 124

File type..... 116
File type
External file types..... 118
Function overview..... 120
Overwriting files..... 125
Protect file..... 130
Rename file..... 129, 130
Selecting files..... 122
Tagging files..... 129
File status..... 121
Filter for hole positions with DXF data update..... 275
Firewall.....
FK programming..... 243, 243
Circular paths..... 248
Fundamentals..... 243
FK-Programming Graphics..... 245
FK programming
Initiating dialog..... 246
Input options..... 249
Auxiliary points..... 252
Circle data..... 250
Closed contours..... 251
Direction and length of contour elements..... 249
End points..... 249
Input options
Relative data..... 253
Straight lines..... 247
Fluctuating spindle speed..... 417
FN14: ERROR: Displaying error messages..... 311
FN16: F-PRINT: Output of formatted texts..... 315, 315
FN18: SYSREAD: Reading system data..... 319
FN19: PLC: Transfer values to the PLC..... 327
FN23: CIRCLE DATA: Calculate a circle from 3 points..... 306
FN24: CIRCLE DATA: Calculate a circle from 4 points..... 306
FN27: TABWRITE: Write to a freely definable table..... 415
FN28: TABREAD: Read from a freely definable table..... 416
Formatted output of Q parameter values..... 315
Form view..... 414
Freely definable tables.....
FS, Functional safety..... 506
Full circle..... 229
Functional safety FS..... 506
Fundamentals..... 100

G

Graphics..... 568
Display modes..... 570
With programming..... 156
Magnification of details.... 159
Graphic settings..... 600
Graphic simulation..... 575
Tool display..... 575

H

Handwheel..... 494
Hard disk..... 116
Helical interpolation..... 239
Helix..... 239
Help system..... 165
Help with error messages..... 160

I

Inclined-tool machining in a tilted plane..... 445
Inclined turning..... 486
Initiated tools..... 182
Inserting and modifying blocks. 113
Interrupt machining..... 583
iTNC 530..... 74

L

Load machine configuration..... 627
Look ahead..... 367

M

M91, M92..... 359
Machine settings..... 601
Mange datums..... 510
Manual datum setting..... 538
Circle center as datum..... 540
Corner as datum..... 539
On any axis..... 538
Setting a center line as datum 543
Measurement of machining time..... 576
Measuring workpieces..... 544
Mid-program startup..... 590
After power failure..... 590
Miscellaneous functions..... 356
enter..... 356
For path behavior..... 362
For program run inspection.... 358
For spindle and coolant..... 358
Miscellaneous functions for coordinate entries..... 359
Modes of Operation..... 77
MOD function..... 598
Exit..... 598
Overview..... 599
Select..... 598
Monitoring
Collision..... 381
Move machine axes
Jog positioning..... 493
Moving the machine axes..... 493
With axis direction keys..... 493
with the handwheel..... 494

N

NC and PLC synchronization.... 327
NC error messages..... 160
Nesting..... 287
Network connection..... 141
Network settings..... 615

O

Open contour corners M98..... 363
Opening a BMP file..... 137
Opening a GIF file..... 137
Opening a JPG file..... 137
Opening a PNG file..... 137
Opening a video file..... 136
Opening Excel files..... 133
Opening graphic files..... 137
Opening TXT files..... 136
Open INI file..... 136
Open TXT file..... 136
Operating times..... 607
Option number..... 608

P

Pallet table..... 456
Application..... 456
Processing..... 458
Selecting and exiting..... 458
Pallet tables
Transferring coordinates. 456, 456
Part families..... 302
Path..... 119
Path contours..... 224
Cartesian coordinates..... 224
Circle with tangential connection..... 232
Circular path around circle center CC..... 229
Circular path with defined radius..... 230
Overview..... 224
Straight line..... 225
Polar coordinates..... 236
Circular path around pole CC..... 238
Circular path with tangential connection..... 238
Overview..... 236
Straight line..... 237
Path functions..... 208
Fundamentals..... 208
Circles and circular arcs.... 211
Pre-position..... 212
PDF Viewer..... 132
PLANE Function..... 423, 424
PLANE function
Automatic positioning..... 439

Axis angle definition..... 437
Euler angle definition..... 430
Inclined-tool machining..... 445
Incremental definition..... 436
Point definition..... 434
Positioning behavior..... 439
Projection angle definition..... 429
Resetting..... 426
Selection of possible solutions.... 442
Spatial angle definition..... 427
Vector definition..... 432
Plan view..... 573
PLC and NC synchronization.... 327
Pocket table..... 184
Polar coordinates..... 102
Fundamentals..... 102
Programming..... 236
Positioning..... 562
With Manual Data Input..... 562
With tilted working plane..... 453
With tilted working plane..... 361
Preset table..... 510, 526
Transferring test results..... 526
Principal axes..... 101, 101
Probing a plane..... 536
Probing cycles..... 520
Manual operating mode..... 520
Processing DXF data
Basic settings..... 262
Filter for hole positions..... 275
Selecting a contour..... 267
Selecting hole positions
Single selection..... 272
Selecting machining positions 271
Setting layers..... 264
Program..... 105
Editing..... 112
Opening a new program..... 109
Organization..... 105
Structuring..... 149
Program call
Any desired program as subprogram..... 283
Program defaults..... 379
Programming graphics..... 245
Programming tool movements. 110
Program run..... 581
Execute..... 582
Interrupt..... 583
Mid-program startup..... 590
Optional block skip..... 594
Overview..... 581
Resuming after interruption.... 586
Retraction..... 587
Program-section repeat..... 281
Projection in three planes..... 573
Protection zone..... 603
Pulsing spindle speed..... 417

Q

Q parameter
Export..... 328
Transfer values to the PLC..... 327, 328
Q parameter programming.... 298, 333
Additional functions..... 310
Angle functions..... 305
Calculation of circles..... 306
If-then decisions..... 307
Mathematical functions..... 303
Programming notes.... 300, 334, 335, 336, 338, 340
Q parameters..... 298, 333
Checking..... 308
Local parameters QL..... 298
Preassigned..... 344
Residual parameters QR..... 298

R

Radius compensation..... 195
Entering..... 196
Outside corners, inside corners..... 197
Rapid traverse..... 172
Reading out machine parameters.... 341
Recessing and undercutting..... 479
Reference images..... 553
Reference system..... 101, 101
Replacing texts..... 115
Resonance vibration..... 417
Retraction..... 587
After a power interruption..... 587
Retraction from the contour..... 371
Returning to the contour..... 592
Rotary axes..... 446
Rotary axis
Reduce display M94..... 448
Shortest-path traverse: M126. 447
Rounded corners..... 227
Rounding corners M197..... 376

S

Save service files..... 164
Screen layout..... 75
Search function..... 115
Selecting a contour from DXF.. 267
Selecting positions from DXF... 271
Selecting the datum..... 104
Selecting the unit of measure.. 109
Select kinematics..... 604
Set BAUD rate..... 609
Set data transmission speed.... 609
Software number..... 608
SPEC FCT..... 378
Special functions..... 378
Spindle load monitoring..... 404
Status display..... 80
Additional..... 82
General..... 80
Straight line..... 225, 237
String parameters..... 333
Structuring programs..... 149
Subprogram..... 279
Superimposing handwheel positioning M118..... 369
Surface normal vector..... 432
Switch-off..... 492
Switch-on..... 490

T

Teach In..... 111, 225
Teach-in cut..... 396
Test Run..... 578
Test run
Execute..... 580
Test Run
Overview..... 578
test run
Setting speed..... 569
Text File..... 408
Text file
Delete functions..... 409
Finding text sections..... 411
Opening and exiting..... 408
Text variables..... 333
Tilted axes..... 449
Tilting
Resetting..... 426
Tilting the Working Plane.... 423, 424, 547
Tilting the working plane
Manual..... 547
Tilting without rotary axes..... 444
TNCguide..... 165
TNCremo..... 613
TNCremoNT..... 613
Tool breakage monitoring..... 404
Tool carrier management..... 388
Tool change..... 189
Tool compensation..... 194
Length..... 194
Tool Compensation
Radius..... 195
Tool data..... 174
Call..... 187
Delta values..... 175
Entering into the program..... 175
Enter into the table..... 176
Export..... 205
Import..... 205
Tool data
Initiating..... 182

Tool length..... 174
Tool management..... 198
Editing..... 200
Tool types..... 203
Tool measurement..... 179
Tool name..... 174
Tool number..... 174
Tool radius..... 174
Tool table..... 176
Edit, exit..... 180
Editing functions..... 181, 200
Editing functions..... 202
Input options..... 176
Tool usage file..... 604
Tool usage test..... 191, 191
Touch probe cycles
Manual..... 520
Touch probe monitoring..... 373
Traverse limits..... 603
Traversing reference marks..... 490
Trigonometry..... 305
Turning
Tool data..... 473
Turning mode selection..... 463
Turning Operations..... 462
Feed rate..... 467
Turning operations
Program spindle speed..... 466
Turning Operations
Tool tip radius compensation.. 478

U

Unbalance functions..... 468
User parameters
Machine-specific..... 630
Using touch probe functions with mechanical probes or measuring dials..... 519

V

Version numbers..... 608, 627
Virtual tool axis..... 370
VSC..... 553

W

Window Manager..... 89
Wireless handwheel..... 497
Assign handwheel holder..... 624
Configure..... 624
Selecting transmitter power... 625
Setting channel..... 625
Statistical data..... 626
Working space monitoring 577, 580
Workpiece positions..... 103
Writing probing values to a datum table..... 525
Writing probing values to a preset table..... 526

Z

ZIP archive..... 135

HEIDENHAIN

DR. JOHANNES HEIDENHAIN GmbH
Dr.-Johannes-Heidenhain-Straße 5
83301 Traunreut, Germany
☏ +49 8669 31-0
FAX +49 8669 32-5061
E-mail: info@heidenhain.de

Technical support FAX +49 8669 32-1000
Measuring systems ☏ +49 8669 31-3104
E-mail: service.ms-support@heidenhain.de
TNC support ☏ +49 8669 31-3101
E-mail: service.nc-support@heidenhain.de
NC programming ☏ +49 8669 31-3103
E-mail: service.nc-pgm@heidenhain.de
PLC programming ☏ +49 8669 31-3102
E-mail: service.plc@heidenhain.de
Lathe controls ☏ +49 8669 31-3105
E-mail: service.lathe-support@heidenhain.de

www.heidenhain.de

Touch probes from HEIDENHAIN

help you reduce non-productive time and
improve the dimensional accuracy of the finished workpieces.

Workpiece touch probes

TS 220	Signal transmission by cable
TS 440, TS 444	Infrared transmission
TS 640, TS 740	Infrared transmission

- Workpiece alignment
- Setting datums
- Workpiece measurement

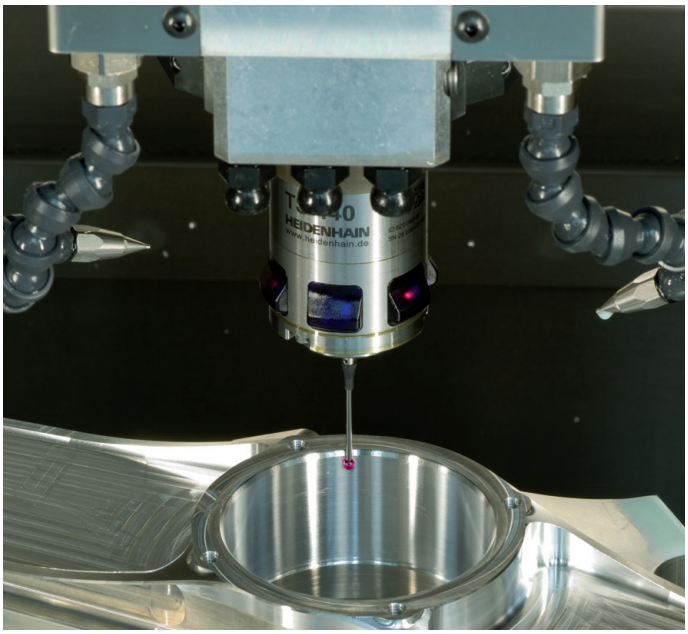

Tool touch probes

TT 140	Signal transmission by cable
TT 449	Infrared transmission
TL	Contact-free laser systems

- Tool measurement
- Wear monitoring
- Tool breakage detection

892909-24 · Ver04 · SW06 · 10/2015 · Printed in Germany · H