HEIDENHAIN

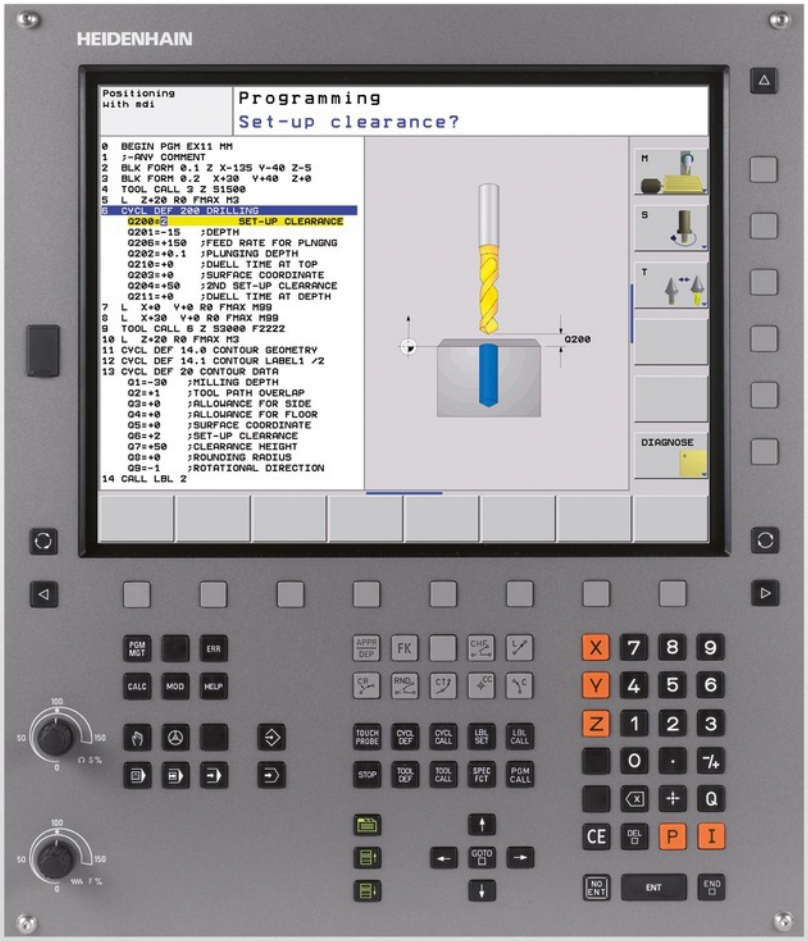

TNC 320

User's Manual
Cycle Programming

NC Software

340551-06
340554-06

English (en)
5/2013

Fundamentals

About this Manual

The symbols used in this manual are described below.

This symbol indicates that important information about the function described must be considered.

WARNING This symbol indicates a possibly dangerous situation that may cause light injuries if not avoided.

This symbol indicates that there is one or more of the following risks when using the described function:

- Danger to workpiece
- Danger to fixtures
- Danger to tool
- Danger to machine
- Danger to operator

This symbol indicates that the described function must be adapted by the machine tool builder. The function described may therefore vary depending on the machine.

This symbol indicates that you can find detailed information about a function in another manual.

Would you like any changes, or have you found any errors?

We are continuously striving to improve our documentation for you. Please help us by sending your requests to the following e-mail address: **tnc-userdoc@heidenhain.de**.

TNC Model, Software and Features

This manual describes functions and features provided by TNCs as of the following NC software numbers.

TNC model	NC software number
TNC 320	340551-06
TNC 320 Programming Station	340554-06

The suffix E indicates the export version of the TNC. The export version of the TNC has the following limitations:

- Simultaneous linear movement in up to 4 axes

The machine tool builder adapts the usable features of the TNC to his machine by setting machine parameters. Some of the functions described in this manual may therefore not be among the features provided by the TNC on your machine tool.

TNC functions that may not be available on your machine include:

- Tool measurement with the TT

Please contact your machine tool builder to become familiar with the features of your machine.

Many machine manufacturers, as well as HEIDENHAIN, offer programming courses for the TNCs. We recommend these courses as an effective way of improving your programming skill and sharing information and ideas with other TNC users.

User's Manual:

All TNC functions that have no connection with cycles are described in the User's Manual of the TNC 320. Please contact HEIDENHAIN if you require a copy of this User’s Manual.

ID of User's Manual for Conversational Programming: 679222--xx.

ID of User's Manual DIN/ISO: 679226-xx.

Software options

The TNC 320 features various software options that can be enabled by your machine tool builder. Each option is to be enabled separately and contains the following respective functions:

Hardware, options	
	■ 1st additional axis for 4 axes plus spindle ■ 2nd additional axis for 5 axes plus spindle

Software option 1 (option number 08)	
Rotary table machining	■ Programming of cylindrical contours as if in two axes ■ Feed rate in distance per minute
Coordinate transformation	■ Working plane, tilting the ...
Interpolation	■ Circle in 3 axes with tilted working plane (spacial arc)

HEIDENHAIN DNC (option number 18)	
	■ Communication with external PC applications over COM component

Software option for additional conversational languages (option number 41)	
Additional conversational languages	■ Slovenian ■ Norwegian ■ Slovak ■ Latvian ■ Korean ■ Estonian ■ Turkish ■ Romanian ■ Lithuanian

Feature Content Level (upgrade functions)

Along with software options, significant further improvements of the TNC software are managed via the **F**eature **C**ontent **L**evel upgrade functions. Functions subject to the FCL are not available simply by updating the software on your TNC.

> All upgrade functions are available to you without surcharge when you receive a new machine.

Upgrade functions are identified in the manual with **FCL n,** where **n** indicates the sequential number of the feature content level.

You can purchase a code number in order to permanently enable the FCL functions. For more information, contact your machine tool builder or HEIDENHAIN.

Intended place of operation

The TNC complies with the limits for a Class A device in accordance with the specifications in EN 55022, and is intended for use primarily in industrially-zoned areas.

Legal information

This product uses open source software. Further information is available on the control under

- Programming and Editing operating mode
- MOD function
- LICENSE INFO soft key

New cycle functions of software 34055x-06

- New Cycle 225 EngravingSee "ENGRAVING (Cycle 225, DIN/ISO: G225)", page 249
- With Cycle 256, rectangular stud, a parameter is now available with which you can determine the approach position on the stud See "RECTANGULAR STUD (Cycle 256, DIN/ISO: G256)", page 136
- With Cycle 257, circular stud milling, a parameter is now available with which you can determine the approach position on the stud See "CIRCULAR STUD (Cycle 257, DIN/ISO: G257)", page 140
- Cycle 402 now also allows you to compensate workpiece misalignment by rotating the rotary table See "BASIC ROTATION over two studs (Cycle 402, DIN/ISO: G402)", page 270
- New Touch Probe Cycle 484 for calibrating the wireless TT 449 touch probe See "Calibrating the wireless TT 449 (Cycle 484, DIN/ISO: G484)", page 389
- New manual probing cycle "Center line as datum" (see User's Manual)
- Predefined values can now be entered into a cycle parameter with the PREDEF function in cycles See "Program defaults for cycles", page 46
- The active tool-axis direction can now be activated in manual mode and during handwheel superimposition as a virtual tool axis (see User's Manua).

Contents

1 Fundamentals / Overviews 37
2 Using Fixed Cycles 41
3 Fixed Cycles: Drilling 59
4 Fixed Cycles: Tapping / Thread Milling 87
5 Fixed Cycles: Pocket Milling / Stud Milling / Slot Milling 117
6 Fixed Cycles: Pattern Definitions 145
7 Fixed Cycles: Contour Pocket 153
8 Fixed Cycles: Cylindrical Surface 177
9 Fixed Cycles: Contour Pocket with Contour Formula 191
10 Fixed Cycles: Multipass Milling 205
11 Cycles: Coordinate Transformations 219
12 Cycles: Special Functions 241
13 Using Touch Probe Cycles 253
14 Touch Probe Cycles: Automatic Measurement of Workpiece Misalignment 263
15 Touch Probe Cycles: Automatic Datum Setting 281
16 Touch Probe Cycles: Automatic Workpiece Inspection 329
17 Touch Probe Cycles: Special Functions 369
18 Touch Probe Cycles: Automatic Tool Measurement 383
19 Tables of Cycles 397

1 Fundamentals / Overviews 37

1.1 Introduction 38

1.2 Available Cycle Groups 39

Overview of fixed cycles 39

Overview of touch probe cycles 40

2 Using Fixed Cycles ... 41

2.1 Working with fixed cycles ... 42

Machine-specific cycles ... 42
Defining a cycle using soft keys ... 42
Defining a cycle using the GOTO function ... 43
Calling a cycle ... 44

2.2 Program defaults for cycles ... 46

Overview ... 46
Entering GLOBAL DEF ... 46
Using GLOBAL DEF information ... 47
Global data valid everywhere ... 47
Global data for drilling operations ... 48
Global data for milling operations with pocket cycles 25x ... 48
Global data for milling operations with contour cycles ... 48
Global data for positioning behavior ... 49
Global data for probing functions ... 49

2.3 PATTERN DEF pattern definition ... 50

Application ... 50
Entering PATTERN DEF ... 50
Using PATTERN DEF ... 51
Defining individual machining positions ... 51
Defining a single row ... 52
Defining a single pattern ... 53
Defining individual frames ... 54
Defining a full circle ... 55
Defining a pitch circle ... 55

2.4 Point tables ... 56

Application ... 56
Creating a point table ... 56
Hiding single points from the machining process ... 57
Selecting a point table in the program ... 57
Calling a cycle in connection with point tables ... 58

3 Fixed Cycles: Drilling....59

3.1 Fundamentals.... 60

Overview.... 60

3.2 CENTERING (Cycle 240, DIN/ISO: G240).... 61

Cycle run....61
Please note while programming:....61
Cycle parameters.... 62

3.3 DRILLING (Cycle 200)....63

Cycle run....63
Please note while programming:....63
Cycle parameters.... 64

3.4 REAMING (Cycle 201, DIN/ISO: G201).... 65

Cycle run....65
Please note while programming:....65
Cycle parameters.... 66

3.5 BORING (Cycle 202, DIN/ISO: G202)....67

Cycle run....67
Please note while programming:....68
Cycle parameters.... 69

3.6 UNIVERSAL DRILLING (Cycle 203, DIN/ISO: G203)....70

Cycle run....70
Please note while programming:....70
Cycle parameters.... 71

3.7 BACK BORING (Cycle 204, DIN/ISO: G204)....73

Cycle run....73
Please note while programming:....73
Cycle parameters.... 74

3.8 UNIVERSAL PECKING (Cycle 205, DIN/ISO: G205)....76

Cycle run....76
Please note while programming:....76
Cycle parameters.... 77

3.9 BORE MILLING (Cycle 208) ... 79

Cycle run ... 79
Please note while programming: ... 79
Cycle parameters ... 80

3.10 SINGLE-LIP D.H.DRLNG (Cycle 241, DIN/ISO: G241) ... 81

Cycle run ... 81
Please note while programming: ... 81
Cycle parameters ... 82

3.11 Programming Examples ... 84

Example: Drilling cycles ... 84
Example: Using drilling cycles in connection with PATTERN DEF ... 85

4 Fixed Cycles: Tapping / Thread Milling 87

4.1 Fundamentals 88

Overview 88

4.2 TAPPING NEW with a floating tap holder (Cycle 206, DIN/ISO: G206) 89

Cycle run 89
Please note while programming: 89
Cycle parameters 90

4.3 RIGID TAPPING without a floating tap holder NEW (Cycle 207, DIN/ISO: G207) 91

Cycle run 91
Please note while programming: 91
Cycle parameters 92

4.4 TAPPING WITH CHIP BREAKING (Cycle 209, DIN/ISO: G209) 93

Cycle run 93
Please note while programming: 94
Cycle parameters 95

4.5 Fundamentals of Thread Milling 97

Prerequisites 97

4.6 THREAD MILLING (Cycle 262, DIN/ISO: G262) 99

Cycle run 99
Please note while programming: 100
Cycle parameters 101

4.7 THREAD MILLING/COUNTERSINKING (Cycle 263, DIN/ISO:G263) 102

Cycle run 102
Please note while programming: 103
Cycle parameters 103

4.8 THREAD DRILLING/MILLING (Cycle 264, DIN/ISO: G264) 105

Cycle run 105
Please note while programming: 106
Cycle parameters 106

4.9 HELICAL THREAD DRILLING/MILLING (Cycle 265, DIN/ISO: G265) 108

Cycle run 108
Please note while programming: 109
Cycle parameters 110

4.10 OUTSIDE THREAD MILLING (Cycle 267, DIN/ISO: G267) 112

Cycle run 112
Please note while programming: 113
Cycle parameters 113

4.11 Programming Examples 115

Example: Thread milling 115

5 Fixed Cycles: Pocket Milling / Stud Milling / Slot Milling 117

5.1 Fundamentals 118

Overview 118

5.2 RECTANGULAR POCKET (Cycle 251, DIN/ISO: G251) 119

Cycle run 119
Please note while programming: 120
Cycle parameters 121

5.3 CIRCULAR POCKET (Cycle 252, DIN/ISO: G252) 123

Cycle run 123
Please note while programming: 124
Cycle parameters 125

5.4 SLOT MILLING (Cycle 253, DIN/ISO: G253) 127

Cycle run 127
Please note while programming: 128
Cycle parameters 129

5.5 CIRCULAR SLOT (Cycle 254, DIN/ISO: G254) 131

Cycle run 131
Please note while programming: 132
Cycle parameters 133

5.6 RECTANGULAR STUD (Cycle 256, DIN/ISO: G256) 136

Cycle run 136
Please note while programming: 137
Cycle parameters 138

5.7 CIRCULAR STUD (Cycle 257, DIN/ISO: G257) 140

Cycle run 140
Please note while programming: 140
Cycle parameters 141

5.8 Programming Examples 143

Example: Milling pockets, studs and slots 143

6 Fixed Cycles: Pattern Definitions ... 145

6.1 Fundamentals ... 146

Overview ... 146

6.2 CIRCULAR PATTERN (Cycle 220, DIN/ISO: G220) ... 147

Cycle run ... 147

Please note while programming: ... 147

Cycle parameters ... 147

6.3 LINEAR PATTERN (Cycle 221, DIN/ISO: G221) ... 149

Cycle run ... 149

Please note while programming: ... 149

Cycle parameters ... 150

6.4 Programming Examples ... 151

Example: Polar hole patterns ... 151

7 Fixed Cycles: Contour Pocket 153

7.1 SL Cycles 154

Fundamentals 154
Overview 155

7.2 CONTOUR (Cycle 14, DIN/ISO: G37) 156

Please note while programming: 156
Cycle parameters 156

7.3 Superimposed contours 157

Fundamentals 157
Subprograms: overlapping pockets 157
Area of inclusion 158
Area of exclusion 158
Area of intersection 159

7.4 CONTOUR DATA (Cycle 20, DIN/ISO: G120) 160

Please note while programming: 160
Cycle parameters 161

7.5 PILOT DRILLING (Cycle 21, DIN/ISO: G121) 162

Cycle run 162
Please note while programming: 162
Cycle parameters 163

7.6 ROUGHING (Cycle 22, DIN/ISO: G122) 164

Cycle run 164
Please note while programming: 165
Cycle parameters 166

7.7 FLOOR FINISHING (Cycle 23, DIN/ISO: G123) 167

Cycle run 167
Please note while programming: 167
Cycle parameters 167

7.8 SIDE FINISHING (Cycle 24, DIN/ISO: G124) 168

Cycle run 168
Please note while programming: 168
Cycle parameters 169

7.9 CONTOUR TRAIN (Cycle 25, DIN/ISO: G125) 170

Cycle run 170
Please note while programming: 170
Cycle parameters 171

7.10 Programming Examples 172

Example: Roughing-out and fine-roughing a pocket 172
Example: Pilot drilling, roughing-out and finishing overlapping contours 174
Example: Contour train 176

8 Fixed Cycles: Cylindrical Surface ... 177

8.1 Fundamentals ... 178

Overview of cylindrical surface cycles ... 178

8.2 CYLINDER SURFACE (Cycle 27, DIN/ISO: G127, software option 1) ... 179

Cycle call ... 179

Please note while programming: ... 180

Cycle parameters ... 181

8.3 CYLINDER SURFACE Slot milling (Cycle 28, DIN/ISO: G128, software option 1) ... 182

Cycle run ... 182

Please note while programming: ... 183

Cycle parameters ... 184

8.4 CYLINDER SURFACE Ridge milling (Cycle 29, DIN/ISO: G129, software option 1) ... 185

Cycle run ... 185

Please note while programming: ... 186

Cycle parameters ... 187

8.5 Programming Examples ... 188

Example: Cylinder surface with Cycle 27 ... 188

Example: Cylinder surface with Cycle 28 ... 190

9 Fixed Cycles: Contour Pocket with Contour Formula 191

9.1 SL cycles with complex contour formula 192

Fundamentals 192
Selecting a program with contour definitions 194
Defining contour descriptions 194
Entering a complex contour formula 195
Superimposed contours 196
Contour machining with SL Cycles 198
Example: Roughing and finishing superimposed contours with the contour formula 199

9.2 SL cycles with simple contour formula 202

Fundamentals 202
Entering a simple contour formula 204
Contour machining with SL Cycles 204

10 Fixed Cycles: Multipass Milling 205

10.1 Fundamentals 206

Overview 206

10.2 MULTIPASS MILLING (Cycle 230, DIN/ISO: G230) 207

Cycle run 207

Please note while programming: 207

Cycle parameters 208

10.3 RULED SURFACE (Cycle 231, DIN/ISO: G231) 209

Cycle run 209

Please note while programming: 210

Cycle parameters 211

10.4 FACE MILLING (Cycle 232, DIN/ISO: G232) 213

Cycle run 213

Please note while programming: 215

Cycle parameters 215

10.5 Programming Examples 217

Example: Multipass milling 217

11 Cycles: Coordinate Transformations 219

11.1 Fundamentals 220

Overview 220
Effect of coordinate transformations 220

11.2 DATUM SHIFT (Cycle 7, DIN/ISO: G54) 221

Effect 221
Cycle parameters 221

11.3 DATUM SHIFT with datum tables (Cycle 7, DIN/ISO: G53) 222

Effect 222
Please note while programming: 222
Cycle parameters 223
Selecting a datum table in the part program 223
Editing the datum table in the Programming and Editing mode of operation 224
Configuring the datum table 225
To exit a datum table 225
Status displays 225

11.4 DATUM SETTING (Cycle 247, DIN/ISO: G247) 226

Effect 226
Please note before programming: 226
Cycle parameters 226
Status displays 226

11.5 MIRRORING (Cycle 8, DIN/ISO: G28) 227

Effect 227
Please note while programming: 227
Cycle parameters 227

11.6 ROTATION (Cycle 10, DIN/ISO: G73) 228

Effect 228
Please note while programming: 228
Cycle parameters 229

11.7 SCALING (Cycle 11, DIN/ISO: G72) 230

Effect 230
Cycle parameters 230

11.8 AXIS-SPECIFIC SCALING (Cycle 26)....231

Effect.... 231
Please note while programming:....231
Cycle parameters.... 231

11.9 WORKING PLANE (Cycle 19, DIN/ISO: G80, software option 1).... 232

Effect.... 232
Please note while programming:....233
Cycle parameters.... 233
Resetting....233
Positioning the axes of rotation....234
Position display in the tilted system....235
Workspace monitoring.... 235
Positioning in a tilted coordinate system....236
Combining coordinate transformation cycles....236
Procedure for working with Cycle 19 WORKING PLANE.... 237

11.10 Programming Examples.... 238

Example: Coordinate transformation cycles.... 238

12 Cycles: Special Functions 241

12.1 Fundamentals 242

Overview 242

12.2 DWELL TIME (Cycle 9, DIN/ISO: G04) 243

Function 243

Cycle parameters 243

12.3 PROGRAM CALL (Cycle 12, DIN/ISO: G39) 244

Cycle function 244

Please note while programming: 244

Cycle parameters 244

12.4 SPINDLE ORIENTATION (Cycle 13, DIN/ISO: G36) 245

Cycle function 245

Please note while programming: 245

Cycle parameters 245

12.5 TOLERANCE (Cycle 32, DIN/ISO: G62) 246

Cycle function 246

Influences of the geometry definition in the CAM system 246

Please note while programming: 247

Cycle parameters 248

12.6 ENGRAVING (Cycle 225, DIN/ISO: G225) 249

Cycle run 249

Please note while programming: 249

Cycle parameters 250

Allowed engraving characters 251

Characters that cannot be printed 251

Engraving system variables 251

13 Using Touch Probe Cycles 253

13.1 General information about touch probe cycles 254

Method of function 254
Consideration of a basic rotation in the Manual Operation mode 254
Cycles in the Manual and El. Handwheel modes 254
Touch probe cycles for automatic operation 255

13.2 Before You Start Working with Touch Probe Cycles 257

Maximum traverse to touch point: DIST in touch probe table 257
Set-up clearance to touch point: SET_UP in touch probe table 257
Orient the infrared touch probe to the programmed probe direction: TRACK in touch probe table 257
Touch trigger probe, probing feed rate: F in touch probe table 258
Touch trigger probe, rapid traverse for positioning: FMAX 258
Touch trigger probe, rapid traverse for positioning: F_PREPOS in touch probe table 258
Multiple measurements 258
Confidence interval of multiple measurements 258
Executing touch probe cycles 259

13.3 Touch probe table 260

General information 260
Editing touch probe tables 260
Touch probe data 261

14 Touch Probe Cycles: Automatic Measurement of Workpiece Misalignment 263

14.1 Fundamentals 264

Overview 264

Characteristics common to all touch probe cycles for measuring workpiece misalignment 265

14.2 BASIC ROTATION (Cycle 400, DIN/ISO: G400) 266

Cycle run 266

Please note while programming: 266

Cycle parameters 266

14.3 BASIC ROTATION over two holes (Cycle 401, DIN/ISO: G401) 268

Cycle run 268

Please note while programming: 268

Cycle parameters 268

14.4 BASIC ROTATION over two studs (Cycle 402, DIN/ISO: G402) 270

Cycle run 270

Please note while programming: 270

Cycle parameters 271

14.5 BASIC ROTATION compensation via rotary axis (Cycle 403, DIN/ISO: G403) 273

Cycle run 273

Please note while programming: 273

Cycle parameters 274

14.6 SET BASIC ROTATION (Cycle 404, DIN/ISO: G404) 276

Cycle run 276

Cycle parameters 276

14.7 Compensating workpiece misalignment by rotating the C axis (Cycle 405, DIN/ISO: G405) 277

Cycle run 277

Please note while programming: 278

Cycle parameters 278

14.8 Example: Determining a basic rotation from two holes 280

15 Touch Probe Cycles: Automatic Datum Setting 281

15.1 Fundamentals 282

Overview 282
Characteristics common to all touch probe cycles for datum setting 284

15.2 DATUM SLOT CENTER (Cycle 408, DIN/ISO: G408) 286

Cycle run 286
Please note while programming: 286
Cycle parameters 287

15.3 DATUM RIDGE CENTER (Cycle 409, DIN/ISO: G409) 289

Cycle run 289
Please note while programming: 289
Cycle parameters 290

15.4 DATUM FROM INSIDE OF RECTANGLE (Cycle 410, DIN/ISO: G410) 292

Cycle run 292
Please note while programming: 293
Cycle parameters 293

15.5 DATUM FROM OUTSIDE OF RECTANGLE (Cycle 411, DIN/ISO: G411) 296

Cycle run 296
Please note while programming: 297
Cycle parameters 297

15.6 DATUM FROM INSIDE OF CIRCLE (Cycle 412, DIN/ISO: G412) 300

Cycle run 300
Please note while programming: 301
Cycle parameters 301

15.7 DATUM FROM OUTSIDE OF CIRCLE (Cycle 413, DIN/ISO: G413) 304

Cycle run 304
Please note while programming: 304
Cycle parameters 305

15.8 DATUM FROM OUTSIDE OF CORNER (Cycle 414, DIN/ISO: G414) 308

Cycle run 308
Please note while programming: 309
Cycle parameters 309

15.9 DATUM FROM INSIDE OF CORNER (Cycle 415, DIN/ISO: G415).....312

Cycle run.....312
Please note while programming:.....312
Cycle parameters..... 313

15.10 DATUM CIRCLE CENTER (Cycle 416, DIN/ISO: G416).....315

Cycle run.....315
Please note while programming:.....315
Cycle parameters..... 316

15.11 DATUM IN TOUCH PROBE AXIS (Cycle 417, DIN/ISO: G417).....318

Cycle run.....318
Please note while programming:.....318
Cycle parameters..... 319

15.12 DATUM AT CENTER OF 4 HOLES (Cycle 418, DIN/ISO: G418).....320

Cycle run.....320
Please note while programming:.....320
Cycle parameters..... 321

15.13 DATUM IN ONE AXIS (Cycle 419, DIN/ISO: G419).....323

Cycle run.....323
Please note while programming:.....323
Cycle parameters..... 323

15.14 Example: Datum setting in center of a circular segment and on top surface of workpiece.....325

15.15 Example: Datum setting on top surface of workpiece and in center of a bolt hole circle.....326

16 Touch Probe Cycles: Automatic Workpiece Inspection....329

16.1 Fundamentals.... 330

Overview.... 330
Recording the results of measurement....331
Measurement results in Q parameters.... 333
Classification of results....333
Tolerance monitoring....333
Tool monitoring....334
Reference system for measurement results.... 335

16.2 DATUM PLANE (Cycle 0, DIN/ISO: G55).... 336

Cycle run....336
Please note while programming:....336
Cycle parameters.... 336

16.3 POLAR DATUM PLANE (Cycle 1).... 337

Cycle run....337
Please note while programming:....337
Cycle parameters.... 337

16.4 MEASURE ANGLE (Cycle 420, DIN/ISO: G420)....338

Cycle run....338
Please note while programming:....338
Cycle parameters.... 338

16.5 MEASURE HOLE (Cycle 421, DIN/ISO: G421).... 340

Cycle run....340
Please note while programming:....340
Cycle parameters.... 341

16.6 MEASURE HOLE OUTSIDE (Cycle 422, DIN/ISO: G422)....343

Cycle run....343
Please note while programming:....343
Cycle parameters.... 344

16.7 MEASURE RECTANGLE INSIDE (Cycle 423, DIN/ISO: G423).... 346

Cycle run....346
Please note while programming:....347
Cycle parameters.... 347

16.8 MEASURE RECTANGLE OUTSIDE (Cycle 424, DIN/ISO: G424) 350

Cycle run 350
Please note while programming: 350
Cycle parameters 351

16.9 MEASURE INSIDE WIDTH (Cycle 425, DIN/ISO: G425) 353

Cycle run 353
Please note while programming: 353
Cycle parameters 354

16.10 MEASURE RIDGE WIDTH (Cycle 426, DIN/ISO: G426) 356

Cycle run 356
Please note while programming: 356
Cycle parameters 356

16.11 MEASURE COORDINATE (Cycle 427, DIN/ISO: G427) 358

Cycle run 358
Please note while programming: 358
Cycle parameters 358

16.12 MEASURE BOLT HOLE CIRCLE (Cycle 430, DIN/ISO: G430) 360

Cycle run 360
Please note while programming: 360
Cycle parameters 361

16.13 MEASURE PLANE (Cycle 431, DIN/ISO: G431) 363

Cycle run 363
Please note while programming: 363
Cycle parameters 364

16.14 Programming Examples 366

Example: Measuring and reworking a rectangular stud 366
Example: Measuring a rectangular pocket and recording the results 368

17 Touch Probe Cycles: Special Functions....369

17.1 Fundamentals.... 370

Overview.... 370

17.2 MEASURE (Cycle 3)....371

Cycle run....371

Please note while programming:....371

Cycle parameters.... 372

17.3 Calibrating a touch trigger probe....373

17.4 Displaying calibration values.... 374

17.5 CALIBRATE TS (Cycle 460, DIN/ISO: G460)....375

17.6 CALIBRATE TS LENGTH (Cycle 461, DIN/ISO: G461).... 377

17.7 CALIBRATE TS RADIUS INSIDE (Cycle 462, DIN/ISO: G462).... 378

17.8 CALIBRATE TS RADIUS OUTSIDE (Cycle 463, DIN/ISO: G463).... 380

18 Touch Probe Cycles: Automatic Tool Measurement....383

18.1 Fundamentals.... 384

Overview.... 384
Differences between Cycles 31 to 33 and Cycles 481 to 483.... 385
Setting machine parameters.... 385
Entries in the tool table TOOL.T....387

18.2 Calibrate the TT (Cycle 30 or 480, DIN/ISO: G480)....388

Cycle run....388
Please note while programming:....388
Cycle parameters.... 388

18.3 Calibrating the wireless TT 449 (Cycle 484, DIN/ISO: G484).... 389

Fundamentals.... 389
Cycle run....389
Please note while programming:....389
Cycle parameters.... 389

18.4 Measuring tool length (Cycle 31 or 481, DIN/ISO: G481)....390

Cycle run....390
Please note while programming:....390
Cycle parameters.... 391

18.5 Measuring tool radius (Cycle 32 or 482, DIN/ISO: G482)....392

Cycle run....392
Please note while programming:....392
Cycle parameters.... 393

18.6 Measuring tool length and radius (Cycle 33 or 483, DIN/ISO: G483)....394

Cycle run....394
Please note while programming:....394
Cycle parameters.... 395

19 Tables of Cycles 397

19.1 Overview 398

Fixed cycles 398

Touch probe cycles 399

1

Fundamentals / Overviews

1.1 Introduction

Frequently recurring machining cycles that comprise several working steps are stored in the TNC memory as standard cycles. Coordinate transformations and several special functions are also available as cycles.

Most cycles use Q parameters as transfer parameters. Parameters with specific functions that are required in several cycles always have the same number: For example, **Q200** is always assigned the set-up clearance, **Q202** the plunging depth, etc.

Danger of collision!

Cycles sometimes execute extensive operations. For safety reasons, you should run a graphical program test before machining.

If you use indirect parameter assignments in cycles with numbers greater than 200 (e.g. **Q210 = Q1**), any change in the assigned parameter (e.g. Q1) will have no effect after the cycle definition. Define the cycle parameter (e.g. **Q210**) directly in such cases.

If you define a feed-rate parameter for fixed cycles greater than 200, then instead of entering a numerical value you can use soft keys to assign the feed rate defined in the **TOOL CALL** block (FAUTO soft key). You can also use the feed-rate alternatives **FMAX** (rapid traverse), **FZ** (feed per tooth) and **FU** (feed per rev), depending on the respective cycle and the function of the feed-rate parameter.

Note that, after a cycle definition, a change of the **FAUTO** feed rate has no effect, because internally the TNC assigns the feed rate from the **TOOL CALL** block when processing the cycle definition.

If you want to delete a block that is part of a cycle, the TNC asks you whether you want to delete the whole cycle.

1.2 Available Cycle Groups

Overview of fixed cycles

CYCL DEF

- The soft-key row shows the available groups of cycles

Cycle group	Soft key	Page
Cycles for pecking, reaming, boring, and counterboring	DRILLING/ THREAD	60
Cycles for tapping, thread cutting and thread milling	DRILLING/ THREAD	88
Cycles for milling pockets, studs and slots	POCKETS/ STUDS/ SLOTS	118
Cycles for producing hole patterns, such as circular or linear point patterns	PATTERN	146
SL (Subcontour List) cycles which allow the contour-parallel machining of relatively complex contours consisting of several overlapping subcontours, cylinder surface interpolation	SL II	178
Cycles for multipass milling of flat or twisted surfaces	MULTIPASS MILLING	206
Coordinate transformation cycles which enable datum shift, rotation, mirror image, enlarging and reducing for various contours	COORD. TRANSF.	220
Special cycles such as dwell time, program call, oriented spindle stop and tolerance	SPECIAL CYCLES	242

▷

- If required, switch to machine-specific fixed cycles. These fixed cycles can be integrated by your machine tool builder.

Overview of touch probe cycles

TOUCH PROBE

- The soft-key row shows the available groups of cycles

Cycle group	Soft key	Page
Cycles for automatic measurement and compensation of workpiece misalignment	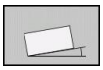	264
Cycles for automatic workpiece presetting	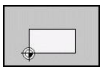	282
Cycles for automatic workpiece inspection	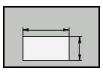	330
Special cycles		370
Cycles for automatic kinematics measurement	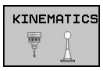	264
Cycles for automatic tool measurement (enabled by the machine tool builder)	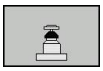	384

- If required, switch to machine-specific touch probe cycles. These touch probe cycles can be integrated by your machine tool builder.

2

Using Fixed Cycles

2.1 Working with fixed cycles

Machine-specific cycles

In addition to the HEIDENHAIN cycles, many machine tool builders offer their own cycles in the TNC. These cycles are available in a separate cycle-number range:

- Cycles 300 to 399
  Machine-specific cycles that are to be defined through the CYCLE DEF key
- Cycles 500 to 599
  Machine-specific touch probe cycles that are to be defined through the TOUCH PROBE key

Refer to your machine manual for a description of the specific function.

Sometimes machine-specific cycles use transfer parameters that HEIDENHAIN already uses in standard cycles. The TNC executes DEF-active cycles as soon as they are defined (See "Calling a cycle", page 44). It executes CALL-active cycles only after they have been called (See "Calling a cycle", page 44). When DEF-active cycles and CALL-active cycles are used simultaneously, it is important to prevent overwriting of transfer parameters already in use. Use the following procedure:

- As a rule, always program DEF-active cycles before CALL-active cycles
- If you do want to program a DEF-active cycle between the definition and call of a CALL-active cycle, do it only if there is no common use of specific transfer parameters

Defining a cycle using soft keys

CYCL DEF

- The soft-key row shows the available groups of cycles

DRILLING/ THREAD

- Press the soft key for the desired group of cycles, for example DRILLING for the drilling cycles

262

- Select the desired cycle, for example THREAD MILLING. The TNC initiates the programming dialog and asks all required input values. At the same time a graphic of the input parameters is displayed in the right screen window. The parameter that is asked for in the dialog prompt is highlighted
- Enter all parameters requested by the TNC and conclude each entry with the ENT key
- The TNC ends the dialog when all required data has been entered

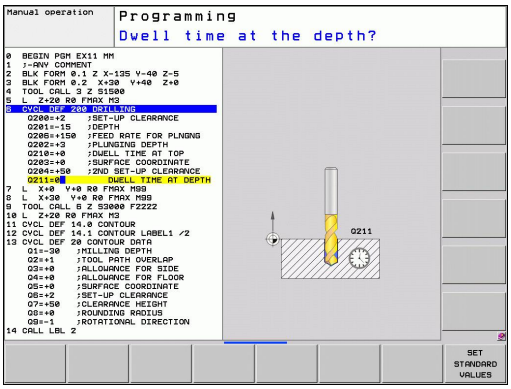

Defining a cycle using the GOTO function

CYCL DEF

- The soft-key row shows the available groups of cycles

GOTO

- The TNC shows an overview of cycles in a pop-up window.
- Choose the desired cycle with the arrow keys, or
- Enter the cycle number and confirm it with the ENT key. The TNC then initiates the cycle dialog as described above

Example NC blocks

```
7 CYCL DEF 200 DRILLING
    Q200=2          ;SET-UP CLEARANCE
    Q201=3          ;DEPTH
    Q206=150        ;FEED RATE FOR PLNGNG
    Q202=5          ;PLUNGING DEPTH
    Q211=0          ;DWELL TIME AT TOP
    Q203=+0         ;SURFACE COORDINATE
    Q204=50         ;2ND SET-UP CLEARANCE
    Q211=0.25       ;DWELL TIME AT BOTTOM
```

Calling a cycle

Prerequisites

The following data must always be programmed before a cycle call:

- **BLK FORM** for graphic display (needed only for test graphics)
- Tool call
- Direction of spindle rotation (M functions M3/M4)
- Cycle definition (CYCL DEF)

For some cycles, additional prerequisites must be observed. They are detailed in the descriptions for each cycle.

The following cycles become effective automatically as soon as they are defined in the part program. These cycles cannot and must not be called:

- Cycle 220 for point patterns on circles and Cycle 221 for point patterns on lines
- SL Cycle 14 CONTOUR GEOMETRY
- SL Cycle 20 CONTOUR DATA
- Cycle 32 TOLERANCE
- Coordinate transformation cycles
- Cycle 9 DWELL TIME
- All touch probe cycles

You can call all other cycles with the functions described as follows.

Calling a cycle with CYCL CALL

The **CYCL CALL** function calls the most recently defined fixed cycle once. The starting point of the cycle is the position that was programmed last before the CYCL CALL block.

CYCL CALL

- To program the cycle call, press the CYCL CALL key
- Press the CYCL CALL M soft key to enter a cycle call
- If necessary, enter the miscellaneous function M (for example **M3** to switch the spindle on), or end the dialog by pressing the END key

Calling a cycle with CYCL CALL PAT

The **CYCL CALL PAT** function calls the most recently defined fixed cycle at all positions that you defined in a PATTERN DEF pattern definition (See "PATTERN DEF pattern definition", page 50) or in a point table (See "Point tables", page 56).

Calling a cycle with CYCL CALL POS

The **CYCL CALL POS** function calls the most recently defined fixed cycle once. The starting point of the cycle is the position that you defined in the **CYCL CALL POS** block.

Using positioning logic the TNC moves to the position defined in the **CYCL CALL POS** block.

- If the tool's current position in the tool axis is greater than the top surface of the workpiece (Q203), the TNC moves the tool to the programmed position first in the machining plane and then in the tool axis.
- If the tool's current position in the tool axis is below the top surface of the workpiece (Q203), the TNC moves the tool to the programmed position first in the tool axis to the clearance height and then in the working plane to the programmed position.

Three coordinate axes must always be programmed in the **CYCL CALL POS** block. With the coordinate in the tool axis you can easily change the starting position. It serves as an additional datum shift.

The feed rate most recently defined in the **CYCL CALL POS** block applies only to traverse to the start position programmed in this block.

As a rule, the TNC moves without radius compensation (R0) to the position defined in the **CYCL CALL POS** block.

If you use **CYCL CALL POS** to call a cycle in which a start position is defined (for example Cycle 212), then the position defined in the cycle serves as an additional shift of the position defined in the **CYCL CALL POS** block. You should therefore always define the start position to be set in the cycle as 0.

Calling a cycle with M99/89

The **M99** function, which is active only in the block in which it is programmed, calls the last defined fixed cycle once. You can program **M99** at the end of a positioning block. The TNC moves to this position and then calls the last defined fixed cycle.

If the TNC is to run the cycle automatically after every positioning block, program the first cycle call with **M89**.

To cancel the effect of **M89**, program:

- **M99** in the positioning block in which you move to the last starting point, or
- Use **CYCL DEF** to define a new fixed cycle

2.2 Program defaults for cycles

Overview

All Cycles 20 to 25, as well as all of those with numbers 200 or higher, always use identical cycle parameters, such as the set-up clearance **Q200,** which you must enter for each cycle definition. The **GLOBAL DEF** function gives you the possibility of defining these cycle parameters once at the beginning of the program, so that they are effective globally for all fixed cycles used in the program. In the respective fixed cycle you then simply link to the value defined at the beginning of the program.

The following GLOBAL DEF functions are available:

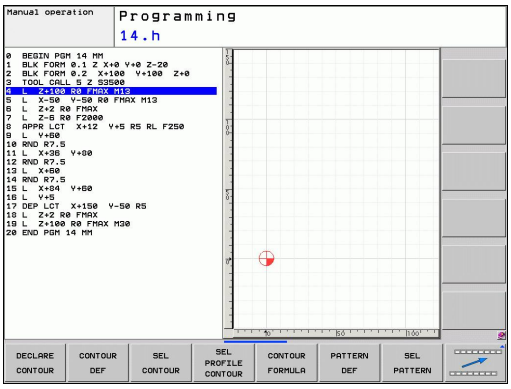

Machining patterns	Soft key	Page
GLOBAL DEF COMMON Definition of generally valid cycle parameters	100 GLOBAL DEF GENERAL	47
GLOBAL DEF DRILLING Definition of specific drilling cycle parameters	105 GLOBAL DEF DRILLING	48
GLOBAL DEF POCKET MILLING Definition of specific pocket-milling cycle parameters	110 GLOBAL DEF POCKT MLNG	48
GLOBAL DEF CONTOUR MILLING Definition of specific contour milling cycle parameters	111 GLOBAL DEF CNTR MLLNG	48
GLOBAL DEF POSITIONING Definition of the positioning behavior for **CYCL CALL PAT**	125 GLOBAL DEF POSITIONG.	49
GLOBAL DEF PROBING Definition of specific touch probe cycle parameters	120 GLOBAL DEF PROBING	49

Entering GLOBAL DEF

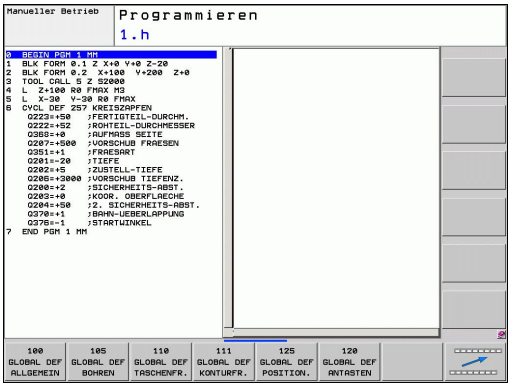

- Select the Programming and Editing operating mode
- Press the special functions key (SPEC FCT)
- Select the functions for program defaults (PROGRAM DEFAULTS)
- Select **GLOBAL DEF** functions (GLOBAL DEF)
- Select the desired GLOBAL DEF function, e.g. **GLOBAL DEF COMMON** (100 GLOBAL DEF GENERAL)
- Enter the required definitions, and confirm each entry with the ENT key

Using GLOBAL DEF information

If you have entered the corresponding GLOBAL DEF functions at the beginning of the program, then you can link to these globally valid values when defining any fixed cycle.

Proceed as follows:

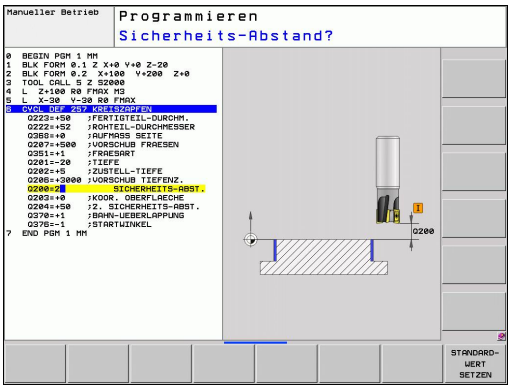

- Select the Programming and Editing operating mode

- Select fixed cycles

- Select the desired group of cycles, for example: drilling cycles

- Select the desired cycle, e.g. **DRILLING**
- The TNC displays the SET STANDARD VALUES soft key, if there is a global parameter for it

- Press the SET STANDARD VALUES soft key. The TNC enters the word **PREDEF** (predefined) in the cycle definition. You have now created a link to the corresponding **GLOBAL DEF** parameter that you defined at the beginning of the program

> **!** **Danger of collision!**
> Please note that later changes to the program settings affect the entire machining program, and can therefore change the machining procedure significantly.
> If you enter a fixed value in a fixed cycle, then this value will not be changed by the **GLOBAL DEF** functions.

Global data valid everywhere

- **Set-up clearance**: Distance between tool tip and workpiece surface for automated approach of the cycle start position in the tool axis
- **2nd set-up clearance:** Position to which the TNC positions the tool at the end of a machining step. The next machining position is approached at this height in the machining plane
- **F positioning:** Feed rate at which the TNC traverses the tool within a cycle
- **F retraction**: Feed rate at which the TNC retracts the tool

> ⇨ The parameters are valid for all fixed cycles with numbers greater than 2xx.

Global data for drilling operations

- **Retraction rate for chip breaking:** Value by which the TNC retracts the tool during chip breaking
- **Dwell time at depth**: Time in seconds that the tool remains at the hole bottom
- **Dwell time at top**: Time in seconds that the tool remains at the set-up clearance

> The parameters apply to the drilling, tapping and thread milling cycles 200 to 209, 240, and 262 to 267.

Global data for milling operations with pocket cycles 25x

- **Overlap factor**: The tool radius multiplied by the overlap factor equals the lateral stepover
- **Climb or up-cut**: Select the type of milling
- **Plunging type**: Plunge into the material helically, in a reciprocating motion, or vertically

> The parameters apply to milling cycles 251 to 257.

Global data for milling operations with contour cycles

- **Set-up clearance**: Distance between tool tip and workpiece surface for automated approach of the cycle start position in the tool axis
- **Clearance height**: Absolute height at which the tool cannot collide with the workpiece (for intermediate positioning and retraction at the end of the cycle)
- **Overlap factor**: The tool radius multiplied by the overlap factor equals the lateral stepover
- **Climb or up-cut**: Select the type of milling

> The parameters apply to SL cycles 20, 22, 23, 24 and 25.

Global data for positioning behavior

- **Positioning behavior**: Retraction in the tool axis at the end of the machining step: Return to the 2nd set-up clearance or to the position at the beginning of the unit

> The parameters apply to each fixed cycle that you call with the **CYCL CALL PAT** function.

Global data for probing functions

- **Set-up clearance**: Distance between stylus and workpiece surface for automated approach of the probing position
- **Clearance height:** The coordinate in the touch probe axis to which the TNC traverses the touch probe between measuring points, if the **Move to clearance height** option is activated
- **Move to clearance height**: Select whether the TNC moves the touch probe to the set-up clearance or clearance height between the measuring points

> Applies to all Touch Probe Cycles 4xx.

2.3 PATTERN DEF pattern definition

Application

You use the **PATTERN DEF** function to easily define regular machining patterns, which you can call with the **CYCL CALL PAT** function. As with the cycle definitions, support graphics that illustrate the respective input parameter are also available for pattern definitions.

> **PATTERN DEF** is to be used only in connection with the tool axis Z.

The following machining patterns are available:

Machining patterns	Soft key	Page
POINT Definition of up to any 9 machining positions	POINT	51
ROW Definition of a single row, straight or rotated	ROW	52
PATTERN Definition of a single pattern, straight, rotated or distorted	PATTERN	53
FRAME Definition of a single frame, straight, rotated or distorted	FRAME	54
CIRCLE Definition of a full circle	CIRCLE	55
PITCH CIRCLE Definition of a pitch circle	PITCH CIR	55

Entering PATTERN DEF

- Select the Programming and Editing operating mode
- Press the special functions key (SPEC FCT)
- Select the functions for contour and point machining (CONTOUR + POINT MACHINING)
- Open a **PATTERN DEF** block (PATTERN DEF)
- Select the desired machining pattern, e.g. a single row (ROW)
- Enter the required definitions, and confirm each entry with the ENT key

Using PATTERN DEF

As soon as you have entered a pattern definition, you can call it with the **CYCL CALL PAT** function Calling a cycle, page 44. The TNC then performs the most recently defined machining cycle on the machining pattern you defined.

> A machining pattern remains active until you define a new one, or select a point table with the **SEL PATTERN** function.
>
> You can use the mid-program startup function to select any point at which you want to start or continue machining (see User's Manual, Test Run and Program Run sections).

Defining individual machining positions

> You can enter up to 9 machining positions. Confirm each entry with the ENT key.
>
> If you have defined a **workpiece surface in Z** not equal to 0, then this value is effective in addition to the workpiece surface **Q203** that you defined in the machining cycle.

- **X coord. of machining position** (absolute): Enter X coordinate
- **Y coord. of machining position** (absolute): Enter Y coordinate
- **Coordinate of workpiece surface** (absolute): Enter Z coordinate at which machining is to begin

NC blocks

```
10 L Z+100 R0 FMAX
11 PATTERN DEF POS1
(X+25 Y+33.5 Z+0) POS2 (X+50 Y+75 Z
+0)
```

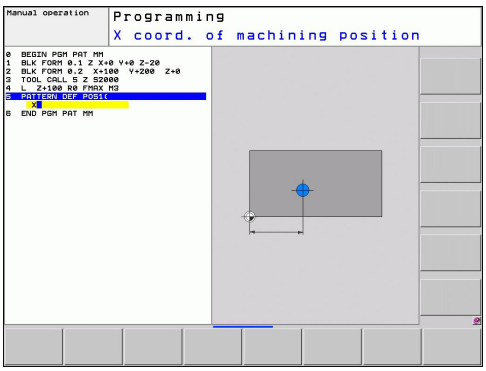

Defining a single row

If you have defined a **workpiece surface in Z** not equal to 0, then this value is effective in addition to the workpiece surface **Q203** that you defined in the machining cycle.

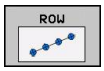

- **Starting point in X** (absolute): Coordinate of the starting point of the row in the X axis
- **Starting point in Y** (absolute): Coordinate of the starting point of the row in the Y axis
- **Spacing of machining positions (incremental)**: Distance between the machining positions. You can enter a positive or negative value
- **Number of repetitions**: Total number of machining operations
- **Rot. position of entire pattern (absolute)**: Angle of rotation around the entered starting point. Reference axis: Reference axis of the active machining plane (e.g. X for tool axis Z). You can enter a positive or negative value
- **Coordinate of workpiece surface** (absolute): Enter Z coordinate at which machining is to begin

NC blocks

```
10 L Z+100 R0 FMAX
11 PATTERN DEF ROW1
(X+25 Y+33.5 D+8 NUM5 ROT+0 Z+0)
```

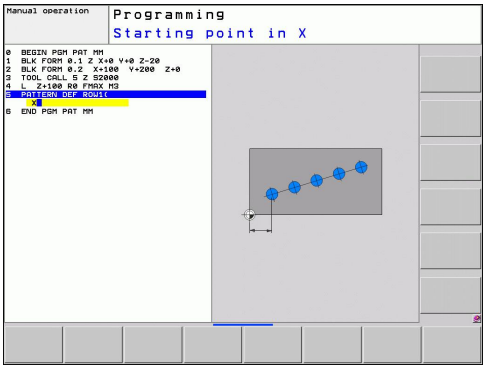

Defining a single pattern

If you have defined a **workpiece surface in Z** not equal to 0, then this value is effective in addition to the workpiece surface **Q203** that you defined in the machining cycle.

The **Rotary pos. ref. ax.** and **Rotary pos. minor ax.** parameters are added to a previously performed **rotated position** of the entire pattern.

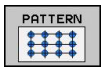

- **Starting point in X** (absolute): Coordinate of the starting point of the pattern in the X axis
- **Starting point in Y** (absolute): Coordinate of the starting point of the pattern in the Y axis
- **Spacing of machining positions X (incremental)**: Distance between the machining positions in the X direction. You can enter a positive or negative value
- **Spacing of machining positions Y (incremental)**: Distance between the machining positions in the Y direction. You can enter a positive or negative value
- **Number of columns**: Total number of columns in the pattern
- **Number of lines**: Total number of rows in the pattern
- **Rot. position of entire pattern (absolute)**: Angle of rotation by which the entire pattern is rotated around the entered starting point. Reference axis: Reference axis of the active machining plane (e.g. X for tool axis Z). You can enter a positive or negative value
- **Rotary pos. ref. ax.**: Angle of rotation around which only the reference axis of the machining plane is distorted with respect to the entered starting point. You can enter a positive or negative value.
- **Rotary pos. minor ax.**: Angle of rotation around which only the minor axis of the machining plane is distorted with respect to the entered starting point. You can enter a positive or negative value.
- **Coordinate of workpiece surface** (absolute): Enter Z coordinate at which machining is to begin

NC blocks

```
10 L Z+100 R0 FMAX
11 PATTERN DEF PAT1 (X+25 Y+33,5
DX+8 DY+10 NUMX5 NUMY4 ROT+0
ROTX+0 ROTY+0 Z+0)
```

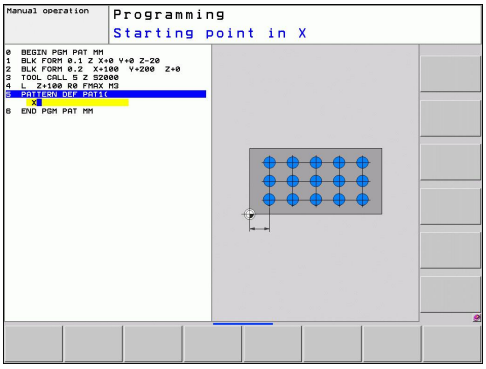

Defining individual frames

If you have defined a **workpiece surface in Z** not equal to 0, then this value is effective in addition to the workpiece surface **Q203** that you defined in the machining cycle.

The **Rotary pos. ref. ax.** and **Rotary pos. minor ax.** parameters are added to a previously performed **rotated position** of the entire pattern.

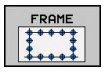

- **Starting point in X** (absolute): Coordinate of the starting point of the frame in the X axis
- **Starting point in Y** (absolute): Coordinate of the starting point of the frame in the Y axis
- **Spacing of machining positions X (incremental)**: Distance between the machining positions in the X direction. You can enter a positive or negative value
- **Spacing of machining positions Y (incremental)**: Distance between the machining positions in the Y direction. You can enter a positive or negative value
- **Number of columns**: Total number of columns in the pattern
- **Number of lines**: Total number of rows in the pattern
- **Rot. position of entire pattern (absolute)**: Angle of rotation by which the entire pattern is rotated around the entered starting point. Reference axis: Reference axis of the active machining plane (e.g. X for tool axis Z). You can enter a positive or negative value
- **Rotary pos. ref. ax.**: Angle of rotation around which only the reference axis of the machining plane is distorted with respect to the entered starting point. You can enter a positive or negative value
- **Rotary pos. minor ax.**: Angle of rotation around which only the minor axis of the machining plane is distorted with respect to the entered starting point. You can enter a positive or negative value.
- **Coordinate of workpiece surface** (absolute): Enter Z coordinate at which machining is to begin

NC blocks

```
10 L Z+100 R0 FMAX
11 PATTERN DEF FRAME1
(X+25 Y+33.5 DX+8 DY+10 NUMX5
NUMY4 ROT+0 ROTX+0 ROTY+0 Z+0)
```

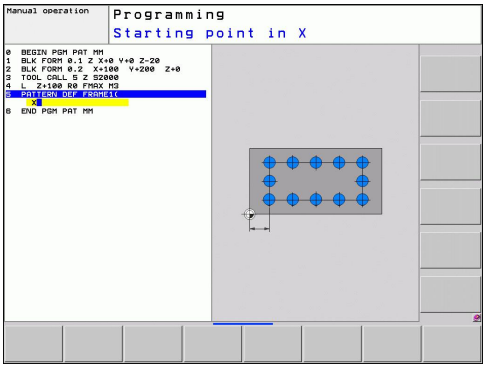

Defining a full circle

If you have defined a **workpiece surface in Z** not equal to 0, then this value is effective in addition to the workpiece surface **Q203** that you defined in the machining cycle.

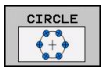

- **Bolt-hole circle center X** (absolute): Coordinate of the circle center in the X axis
- **Bolt-hole circle center Y** (absolute): Coordinate of the circle center in the Y axis
- **Bolt-hole circle diameter**: Diameter of the bolt-hole circle
- **Starting angle**: Polar angle of the first machining position. Reference axis: Reference axis of the active machining plane (e.g. X for tool axis Z). You can enter a positive or negative value
- **Number of repetitions**: Total number of machining positions on the circle
- **Coordinate of workpiece surface** (absolute): Enter Z coordinate at which machining is to begin

NC blocks

```
10 L Z+100 R0 FMAX
11 PATTERN DEF CIRC1
(X+25 Y+33 D80 START+45 NUM8 Z+0)
```

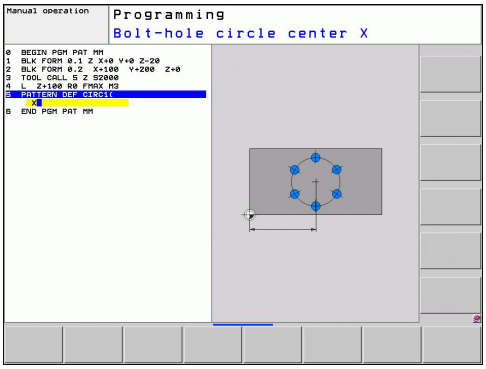

Defining a pitch circle

If you have defined a **workpiece surface in Z** not equal to 0, then this value is effective in addition to the workpiece surface **Q203** that you defined in the machining cycle.

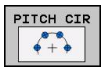

- **Bolt-hole circle center X** (absolute): Coordinate of the circle center in the X axis
- **Bolt-hole circle center Y** (absolute): Coordinate of the circle center in the Y axis
- **Bolt-hole circle diameter**: Diameter of the bolt-hole circle
- **Starting angle**: Polar angle of the first machining position. Reference axis: Major axis of the active machining plane (e.g. X for tool axis Z). You can enter a positive or negative value
- **Stepping angle/end angle**: Incremental polar angle between two machining positions. You can enter a positive or negative value As an alternative you can enter the end angle (switch via soft key).
- **Number of repetitions**: Total number of machining positions on the circle
- **Coordinate of workpiece surface** (absolute): Enter Z coordinate at which machining is to begin

NC blocks

```
10 L Z+100 R0 FMAX
11 PATTERN DEF PITCHCIRC1
(X+25 Y+33 D80 START+45 STEP30
NUM8 Z+0)
```

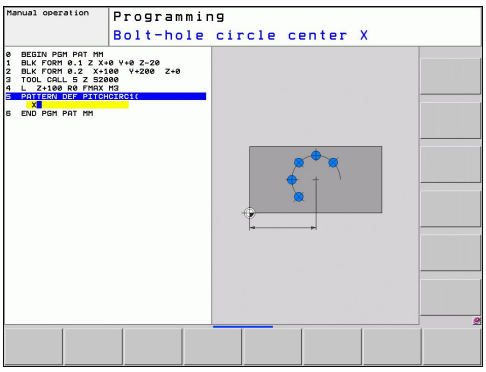

2.4 Point tables

Application

You should create a point table whenever you want to run a cycle, or several cycles in sequence, on an irregular point pattern.

If you are using drilling cycles, the coordinates of the working plane in the point table represent the hole centers. If you are using milling cycles, the coordinates of the working plane in the point table represent the starting-point coordinates of the respective cycle (e.g. center-point coordinates of a circular pocket). Coordinates in the spindle axis correspond to the coordinate of the workpiece surface.

Creating a point table

Select the **PROGRAMMING AND EDITING** mode of operation.

PGM MGT

- Call the file manager: Press the PGM MGT key.

FILE NAME?

ENT

- Enter the name and file type of the point table and confirm your entry with the ENT key.

MM

- Select the unit of measure: Press the MM or INCH soft key. The TNC changes to the program blocks window and displays an empty point table.

INSERT LINE

- With the INSERT LINE soft key, insert new lines and enter the coordinates of the desired machining position.

Repeat the process until all desired coordinates have been entered.

> The name of the point table must begin with a letter.
> Use the soft keys X OFF/ON, Y OFF/ON, Z OFF/ON (second soft-key row) to specify which coordinates you want to enter in the point table.

Hiding single points from the machining process

In the **FADE** column of the point table you can specify if the defined point is to be hidden during the machining process.

- ▶ In the table, select the point to be hidden.
- ▶ Select the **FADE** column.
- ENT ▶ Activate hiding, or
- NO ENT ▶ Deactivate hiding.

Selecting a point table in the program

In the **PROGRAMMING AND EDITING** mode of operation, select the program for which you want to activate the point table.

- PGM CALL ▶ Press the PGM CALL key to call the function for selecting the point table.
- POINT TABLE ▶ Press the POINT TABLE soft key.

Enter the name of the point table and confirm your entry with the END key. If the point table is not stored in the same directory as the NC program, you must enter the complete path.

Example NC block

```
7 SEL PATTERN "TNC:\DIRKT5\MUST35.PNT"
```

Calling a cycle in connection with point tables

> With **CYCL CALL PAT** the TNC runs the point table that you last defined (even if you defined the point table in a program that was nested with **CALL PGM).**

If you want the TNC to call the last defined fixed cycle at the points defined in a point table, then program the cycle call with **CYCLE CALL PAT**:

CYCL CALL

- To program the cycle call, press the CYCL CALL key
- Press the CYCL CALL PAT soft key to call a point table
- Enter the feed rate at which the TNC is to move from point to point (if you make no entry the TNC will move at the last programmed feed rate; **FMAX** is not valid)
- If required, enter a miscellaneous function M, then confirm with the END key

The TNC retracts the tool to the safety clearance between the starting points. Depending on which is greater, the TNC uses either the spindle axis coordinate from the cycle call or the value from cycle parameter Q204 as the clearance height.

If you want to move at reduced feed rate when pre-positioning in the spindle axis, use the miscellaneous function M103.

Effect of the point tables with SL cycles and Cycle 12

The TNC interprets the points as an additional datum shift.

Effect of the point tables with Cycles 200 to 208 and 262 to 267

The TNC interprets the points of the working plane as coordinates of the hole centers. If you want to use the coordinate defined in the point table for the spindle axis as the starting point coordinate, you must define the workpiece surface coordinate (Q203) as 0.

Effect of the point tables with Cycles 210 to 215

The TNC interprets the points as an additional datum shift. If you want to use the points defined in the point table as starting-point coordinates, you must define the starting points and the workpiece surface coordinate (Q203) in the respective milling cycle as 0.

Effect of the point tables with Cycles 251 to 254

The TNC interprets the points of the working plane as coordinates of the cycle starting point. If you want to use the coordinate defined in the point table for the spindle axis as the starting point coordinate, you must define the workpiece surface coordinate (Q203) as 0.

3

Fixed Cycles: Drilling

3.1 Fundamentals

Overview

The TNC offers 9 cycles for all types of drilling operations:

Cycle	Soft key	Page
240 CENTERING With automatic pre-positioning, 2nd set-up clearance, optional entry of the centering diameter or centering depth	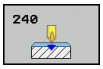	61
200 DRILLING With automatic pre-positioning, 2nd set-up clearance		63
201 REAMING With automatic pre-positioning, 2nd set-up clearance		65
202 BORING With automatic pre-positioning, 2nd set-up clearance		67
203 UNIVERSAL DRILLING With automatic pre-positioning, 2nd set-up clearance, chip breaking, and decrementing		70
204 BACK BORING With automatic pre-positioning, 2nd set-up clearance	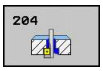	73
205 UNIVERSAL PECKING With automatic pre-positioning, 2nd set-up clearance, chip breaking, and advanced stop distance	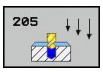	76
208 BORE MILLING With automatic pre-positioning, 2nd set-up clearance		79
241 SINGLE-LIP D.H.DRLNG With automatic pre-positioning to deepened starting point, shaft speed and coolant definition	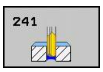	81

3.2 CENTERING (Cycle 240, DIN/ISO: G240)

Cycle run

1 The TNC positions the tool in the tool axis at rapid traverse **FMAX** to set-up clearance above the workpiece surface.
2 The tool is centered at the programmed feed rate **F** to the programmed centering diameter or centering depth.
3 If defined, the tool remains at the centering depth.
4 Finally, the tool path is retraced to setup clearance or—if programmed—to the 2nd setup clearance at rapid traverse **FMAX**.

Please note while programming:

Program a positioning block for the starting point (hole center) in the working plane with radius compensation **R0**.

The algebraic sign for the cycle parameter **Q344** (diameter) or **Q201** (depth) determines the working direction. If you program the diameter or depth = 0, the cycle will not be executed.

Danger of collision!

Use the machine parameter **displayDepthErr** to define whether, if a positive depth is entered, the TNC should output an error message (on) or not (off).

Keep in mind that the TNC reverses the calculation for pre-positioning when a **positive diameter or depth is entered.** This means that the tool moves at rapid traverse in the tool axis to set-up clearance **below** the workpiece surface!

Cycle parameters

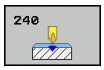

- **Set-up clearance** Q200 (incremental): Distance between tool tip and workpiece surface. Enter a positive value. Input range 0 to 99999.9999
- **Select depth/diameter (0/1)** Q343: Select whether centering is based on the entered diameter or depth. If the TNC is to center based on the entered diameter, the point angle of the tool must be defined in the **T ANGLE** column of the tool table TOOL.T.
  0: Centering based on the entered depth
  1: Centering based on the entered diameter
- **Depth** Q201 (incremental): Distance between workpiece surface and centering bottom (tip of centering taper). Only effective if Q343=0 is defined. Input range -99999.9999 to 99999.9999
- **Diameter (algebraic sign)** Q344: Centering diameter. Only effective if Q343=1 is defined. Input range -99999.9999 to 99999.9999
- **Feed rate for plunging** Q206: Traversing speed of the tool during centering in mm/min. Input range: 0 to 99999.999; alternatively **FAUTO**, **FU**
- **Dwell time at depth** Q211: Time in seconds that the tool remains at the hole bottom. Input range 0 to 3600.0000
- **Coordinate of workpiece surface** Q203 (absolute): Coordinate of the workpiece surface. Input range -99999.9999 to 99999.9999
- **2nd set-up clearance** Q204 (incremental): Coordinate in the spindle axis at which no collision between tool and workpiece (fixtures) can occur. Input range 0 to 99999.9999

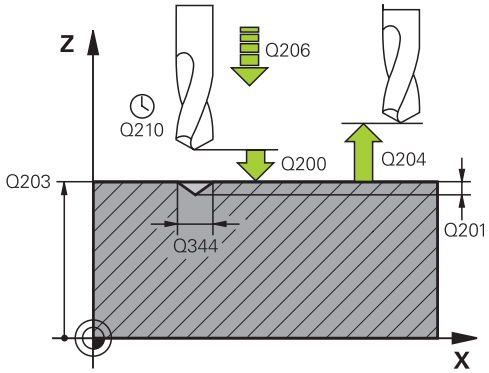

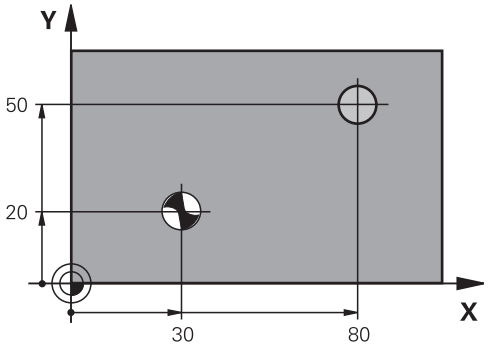

NC blocks

10 L Z+100 R0 FMAX	
11 CYCL DEF 240 CENTERING	
Q200=2	;SET-UP CLEARANCE
Q343=1	;SELECT DEPTH/DIA.
Q201=+0	;DEPTH
Q344=-9	;DIAMETER
Q206=250	;FEED RATE FOR PLNGNG
Q211=0.1	;DWELL TIME AT BOTTOM
Q203=+20	;SURFACE COORDINATE
Q204=100	;2ND SET-UP CLEARANCE
12 L X+30 Y+20 R0 FMAX M3 M99	
13 L X+80 Y+50 R0 FMAX M99	

3.3 DRILLING (Cycle 200)

Cycle run

1 The TNC positions the tool in the tool axis at rapid traverse **FMAX** to set-up clearance above the workpiece surface.
2 The tool drills to the first plunging depth at the programmed feed rate **F**.
3 The TNC returns the tool at **FMAX** to the set-up clearance, dwells there (if a dwell time was entered), and then moves at **FMAX** to the set-up clearance above the first plunging depth.
4 The tool then drills deeper by the plunging depth at the programmed feed rate F.
5 The TNC repeats this process (2 to 4) until the programmed total hole depth is reached.
6 Finally, the tool path is retraced to setup clearance from the hole bottom or—if programmed—to the 2nd setup clearance at **FMAX**.

Please note while programming:

Program a positioning block for the starting point (hole center) in the working plane with radius compensation **R0**.

The algebraic sign for the cycle parameter DEPTH determines the working direction. If you program DEPTH=0, the cycle will not be executed.

Danger of collision!

Use the machine parameter displayDepthErr to define whether, if a positive depth is entered, the TNC should output an error message (on) or not (off).

Keep in mind that the TNC reverses the calculation for pre-positioning when a **positive depth is entered**. This means that the tool moves at rapid traverse in the tool axis to set-up clearance **below** the workpiece surface!

Cycle parameters

- **Set-up clearance** Q200 (incremental): Distance between tool tip and workpiece surface. Enter a positive value. Input range 0 to 99999.9999
- **Depth** Q201 (incremental): Distance between workpiece surface and bottom of hole (tip of drill taper). Input range -99999.9999 to 99999.9999
- **Feed rate for plunging** Q206: Traversing speed of the tool during drilling in mm/min. Input range 0 to 99999.999; alternatively **FAUTO**, **FU**
- **Plunging depth** Q202 (incremental): Infeed per cut. Input range 0 to 99999.9999. The depth does not have to be a multiple of the plunging depth. The TNC will go to depth in one movement if:
  - the plunging depth is equal to the depth
  - the plunging depth is greater than the depth
- **Dwell time at top** Q210: Time in seconds that the tool remains at set-up clearance after having been retracted from the hole for chip removal. Input range 0 to 3600.0000
- **Coordinate of workpiece surface** Q203 (absolute): Coordinate of the workpiece surface. Input range -99999.9999 to 99999.9999
- **2nd set-up clearance** Q204 (incremental): Coordinate in the spindle axis at which no collision between tool and workpiece (fixtures) can occur. Input range 0 to 99999.9999
- **Dwell time at depth** Q211: Time in seconds that the tool remains at the hole bottom. Input range 0 to 3600.0000

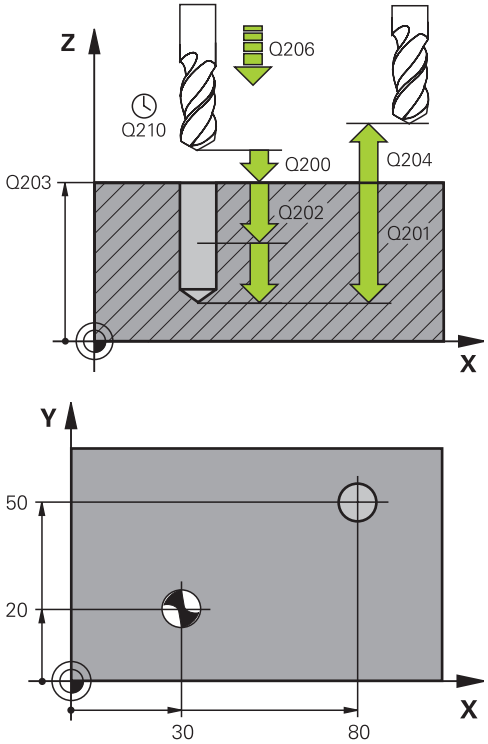

NC blocks

11 CYCL DEF 200 DRILLING	
Q200=2	;SET-UP CLEARANCE
Q201=-15	;DEPTH
Q206=250	;FEED RATE FOR PLNGNG
Q202=5	;PLUNGING DEPTH
Q211=0	;DWELL TIME AT TOP
Q203=+20	;SURFACE COORDINATE
Q204=100	;2ND SET-UP CLEARANCE
Q211=0.1	;DWELL TIME AT BOTTOM
12 L X+30 Y+20 FMAX M3	
13 CYCL CALL	
14 L X+80 Y+50 FMAX M99	

3.4 REAMING (Cycle 201, DIN/ISO: G201)

Cycle run

1 The TNC positions the tool in the tool axis at rapid traverse **FMAX** to the entered set-up clearance above the workpiece surface.
2 The tool reams to the entered depth at the programmed feed rate **F**.
3 If programmed, the tool remains at the hole bottom for the entered dwell time.
4 The tool then retracts to set-up clearance at the feed rate F, and from there—if programmed—to the 2nd set-up clearance in **FMAX**.

Please note while programming:

Program a positioning block for the starting point (hole center) in the working plane with radius compensation **R0**.

The algebraic sign for the cycle parameter DEPTH determines the working direction. If you program DEPTH=0, the cycle will not be executed.

Danger of collision!

Use the machine parameter displayDepthErr to define whether, if a positive depth is entered, the TNC should output an error message (on) or not (off).

Keep in mind that the TNC reverses the calculation for pre-positioning when a **positive depth is entered**. This means that the tool moves at rapid traverse in the tool axis to set-up clearance **below** the workpiece surface!

Cycle parameters

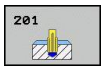

- **Set-up clearance** Q200 (incremental): Distance between tool tip and workpiece surface. Input range 0 to 99999.9999
- **Depth** Q201 (incremental): Distance between workpiece surface and bottom of hole. Input range -99999.9999 to 99999.9999
- **Feed rate for plunging** Q206: Traversing speed of the tool during reaming in mm/min. Input range 0 to 99999.999; alternatively **FAUTO**, **FU**
- **Dwell time at depth** Q211: Time in seconds that the tool remains at the hole bottom. Input range 0 to 3600.0000
- **Retraction feed rate** Q208: Traversing speed of the tool in mm/min when retracting from the hole. If you enter Q208 = 0, the tool retracts at the reaming feed rate. Input range 0 to 99999.999
- **Coordinate of workpiece surface** Q203 (absolute): Coordinate of the workpiece surface. Input range 0 to 99999.9999
- **2nd set-up clearance** Q204 (incremental): Coordinate in the spindle axis at which no collision between tool and workpiece (fixtures) can occur. Input range 0 to 99999.9999

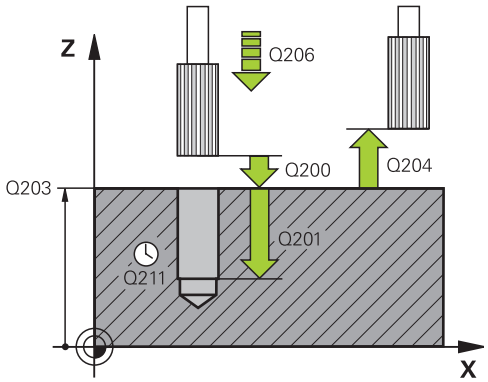

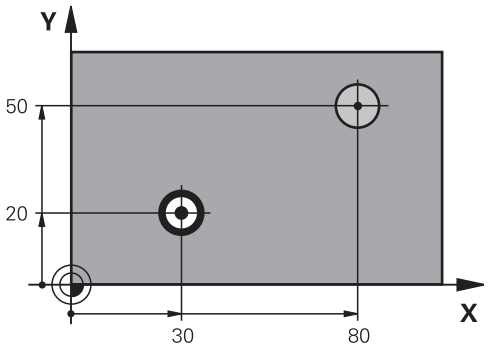

NC blocks

11 CYCL DEF 201 REAMING	
Q200=2	;SET-UP CLEARANCE
Q201=-15	;DEPTH
Q206=100	;FEED RATE FOR PLNGNG
Q211=0.5	;DWELL TIME AT BOTTOM
Q208=250	;RETRACTION FEED RATE
Q203=+20	;SURFACE COORDINATE
Q204=100	;2ND SET-UP CLEARANCE
12 L X+30 Y+20 FMAX M3	
13 CYCL CALL	
14 L X+80 Y+50 FMAX M9	
15 L Z+100 FMAX M2	

3.5 BORING (Cycle 202, DIN/ISO: G202)

Cycle run

1 The TNC positions the tool in the tool axis at rapid traverse **FMAX** to set-up clearance above the workpiece surface.
2 The tool drills to the programmed depth at the feed rate for plunging.
3 If programmed, the tool remains at the hole bottom for the entered dwell time with active spindle rotation for cutting free.
4 The TNC then orients the spindle to the position that is defined in parameter Q336.
5 If retraction is selected, the tool retracts in the programmed direction by 0.2 mm (fixed value).
6 The tool then retracts to set-up clearance at the retraction rate, and from there—if programmed—to the 2nd set-up clearance at **FMAX**. If Q214=0 the tool point remains on the wall of the hole.

Please note while programming:

Machine and TNC must be specially prepared by the machine tool builder for use of this cycle.

This cycle is effective only for machines with servo-controlled spindle.

Program a positioning block for the starting point (hole center) in the working plane with radius compensation **R0**.

The algebraic sign for the cycle parameter DEPTH determines the working direction. If you program DEPTH=0, the cycle will not be executed.

After the cycle is completed, the TNC restores the coolant and spindle conditions that were active before the cycle call.

Danger of collision!

Use the machine parameter displayDepthErr to define whether, if a positive depth is entered, the TNC should output an error message (on) or not (off).

Keep in mind that the TNC reverses the calculation for pre-positioning when a **positive depth is entered**. This means that the tool moves at rapid traverse in the tool axis to set-up clearance **below** the workpiece surface!

Select a disengaging direction in which the tool moves away from the edge of the hole.

Check the position of the tool tip when you program a spindle orientation to the angle that you enter in Q336 (for example, in the Positioning with Manual Data Input mode of operation). Set the angle so that the tool tip is parallel to a coordinate axis.

During retraction the TNC automatically takes an active rotation of the coordinate system into account.

Cycle parameters

- **Set-up clearance** Q200 (incremental): Distance between tool tip and workpiece surface. Input range 0 to 99999.9999
- **Depth** Q201 (incremental): Distance between workpiece surface and bottom of hole. Input range -99999.9999 to 99999.9999
- **Feed rate for plunging** Q206: Traversing speed of the tool during boring at mm/min. Input range 0 to 99999.999; alternatively **FAUTO**, **FU**
- **Dwell time at depth** Q211: Time in seconds that the tool remains at the hole bottom. Input range 0 to 3600.0000
- **Retraction feed rate** Q208: Traversing speed of the tool in mm/min when retracting from the hole. If you enter Q208 = 0, the tool retracts at feed rate for plunging. Input range 0 to 99999.999, alternatively **FMAX**, **FAUTO**
- **Coordinate of workpiece surface** Q203 (absolute): Coordinate of the workpiece surface. Input range -99999.9999 to 99999.9999
- **2nd set-up clearance** Q204 (incremental): Coordinate in the spindle axis at which no collision between tool and workpiece (fixtures) can occur. Input range 0 to 99999.999
- **Disengaging direction (0/1/2/3/4)** Q214: Determine the direction in which the TNC retracts the
  tool on the hole bottom (after spindle orientation)
  0: Do not retract the tool
  1: Retract the tool in minus direction of the principle axis
  2: Retract the tool in minus direction of the minor axis
  3: Retract the tool in plus direction of the principle axis
  4: Retract the tool in plus direction of the minor axis
- **Angle for spindle orientation** Q336 (absolute): Angle at which the TNC positions the tool before retracting it. Input range -360.000 to 360.000

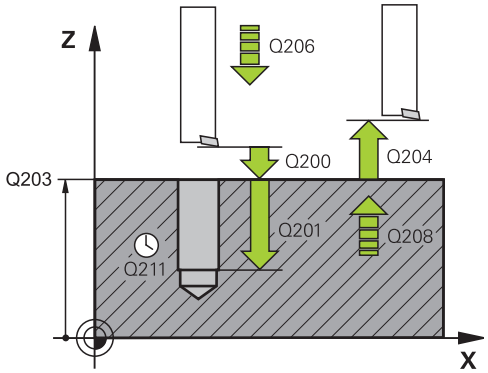

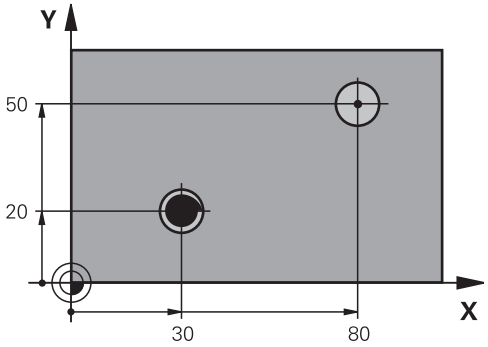

10 L Z+100 R0 FMAX	
11 CYCL DEF 202 BORING	
Q200=2	;SET-UP CLEARANCE
Q201=-15	;DEPTH
Q206=100	;FEED RATE FOR PLNGNG
Q211=0.5	;DWELL TIME AT BOTTOM
Q208=250	;RETRACTION FEED RATE
Q203=+20	;SURFACE COORDINATE
Q204=100	;2ND SET-UP CLEARANCE
Q214=1	;DISENGAGING DIRECTN
Q336=0	;ANGLE OF SPINDLE
12 L X+30 Y+20 FMAX M3	
13 CYCL CALL	
14 L X+80 Y+50 FMAX M99	

3.6 UNIVERSAL DRILLING (Cycle 203, DIN/ISO: G203)

Cycle run

1 The TNC positions the tool in the tool axis at rapid traverse **FMAX** to the entered set-up clearance above the workpiece surface.
2 The tool drills to the first plunging depth at the entered feed rate **F**.
3 If you have programmed chip breaking, the tool then retracts by the entered retraction value. If you are working without chip breaking, the tool retracts at the retraction feed rate to the set-up clearance, remains there—if programmed—for the entered dwell time, and advances again at **FMAX** to the set-up clearance above the first PLUNGING DEPTH.
4 The tool then advances with another infeed at the programmed feed rate. If programmed, the plunging depth is decreased after each infeed by the decrement.
5 The TNC repeats this process (2 to 4) until the programmed total hole depth is reached.
6 The tool remains at the hole bottom—if programmed—for the entered dwell time to cut free, and then retracts to set-up clearance at the retraction feed rate. If programmed, the tool moves to the 2nd set-up clearance at **FMAX**.

Please note while programming:

Program a positioning block for the starting point (hole center) in the working plane with radius compensation **R0**.

The algebraic sign for the cycle parameter DEPTH determines the working direction. If you program DEPTH=0, the cycle will not be executed.

Danger of collision!

Use the machine parameter displayDepthErr to define whether, if a positive depth is entered, the TNC should output an error message (on) or not (off).

Keep in mind that the TNC reverses the calculation for pre-positioning when a **positive depth is entered**. This means that the tool moves at rapid traverse in the tool axis to set-up clearance **below** the workpiece surface!

Cycle parameters

- **Set-up clearance** Q200 (incremental): Distance between tool tip and workpiece surface. Input range 0 to 99999.9999
- **Depth** Q201 (incremental): Distance between workpiece surface and bottom of hole (tip of drill taper). Input range -99999.9999 to 99999.9999
- **Feed rate for plunging** Q206: Traversing speed of the tool during drilling in mm/min. Input range 0 to 99999.999; alternatively **FAUTO**, **FU**
- **Plunging depth** Q202 (incremental): Infeed per cut. Input range 0 to 99999.9999. The depth does not have to be a multiple of the plunging depth. The TNC will go to depth in one movement if:
  - the plunging depth is equal to the depth
  - the plunging depth is greater than the depth and no chip breaking is defined
- **Dwell time at top** Q210: Time in seconds that the tool remains at set-up clearance after having been retracted from the hole for chip removal. Input range 0 to 3600.0000
- **Coordinate of workpiece surface** Q203 (absolute): Coordinate of the workpiece surface. Input range -99999.9999 to 99999.9999
- **2nd set-up clearance** Q204 (incremental): Coordinate in the spindle axis at which no collision between tool and workpiece (fixtures) can occur. Input range 0 to 99999.9999
- **Decrement** Q212 (incremental): Value by which the TNC decreases the plunging depth Q202 after each infeed. Input range 0 to 99999.9999
- **No. of breaks before retracting** Q213: Number of chip breaks after which the TNC is to withdraw the tool from the hole for chip removal. For chip breaking, the TNC retracts the tool each time by the value in Q256. Input range 0 to 99999
- **Minimum plunging depth** Q205 (incremental): If you have entered a decrement, the TNC limits the plunging depth to the value entered with Q205. Input range 0 to 99999.9999

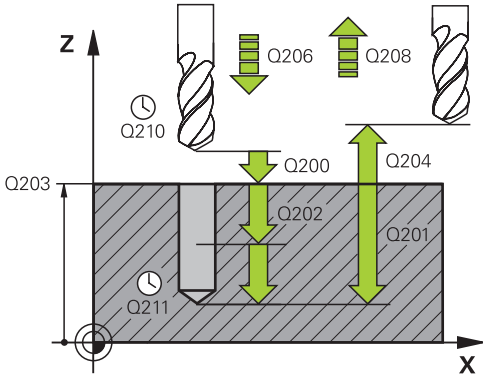

NC blocks

11 CYCL DEF 203 UNIVERSAL DRILLING	
Q200=2	;SET-UP CLEARANCE
Q201=-20	;DEPTH
Q206=150	;FEED RATE FOR PLNGNG
Q202=5	;PLUNGING DEPTH
Q211=0	;DWELL TIME AT TOP
Q203=+20	;SURFACE COORDINATE
Q204=50	;2ND SET-UP CLEARANCE
Q212=0.2	;DECREMENT
Q213=3	;CHIP BREAKING
Q205=3	;MIN. PLUNGING DEPTH
Q211=0.25	;DWELL TIME AT BOTTOM
Q208=500	;RETRACTION FEED RATE
Q256=0.2	;DIST. FOR CHIP BRKNG

- **Dwell time at depth** Q211: Time in seconds that the tool remains at the hole bottom. Input range 0 to 3600.0000
- **Retraction feed rate** Q208: Traversing speed of the tool in mm/min when retracting from the hole. If you enter Q208 = 0, the TNC retracts the tool at the feed rate in Q206. Input range 0 to 99999.999, alternatively **FMAX**, **FAUTO**
- **Retraction rate for chip breaking** Q256 (incremental): Value by which the TNC retracts the tool during chip breaking. Input range 0.1000 to 99999.9999

3.7 BACK BORING (Cycle 204, DIN/ISO: G204)

Cycle run

This cycle allows holes to be bored from the underside of the workpiece.

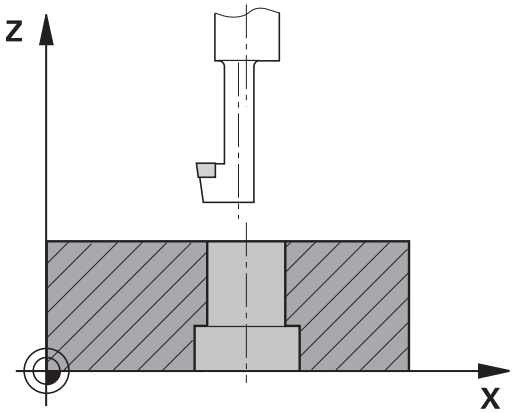

1 The TNC positions the tool in the tool axis at rapid traverse **FMAX** to set-up clearance above the workpiece surface.
2 The TNC then orients the spindle to the 0° position with an oriented spindle stop and displaces the tool by the off-center distance.
3 The tool is then plunged into the already bored hole at the feed rate for pre-positioning until the tooth has reached set-up clearance on the underside of the workpiece.
4 The TNC then centers the tool again over the bore hole, switches on the spindle and the coolant and moves at the feed rate for boring to the depth of bore.
5 If a dwell time is entered, the tool will pause at the top of the bore hole and will then be retracted from the hole again. The TNC carries out another oriented spindle stop and the tool is once again displaced by the off-center distance.
6 The tool then retracts to set-up clearance at the feed rate for pre-positioning, and from there—if programmed—to the 2nd set-up clearance at **FMAX**.

Please note while programming:

Machine and TNC must be specially prepared by the machine tool builder for use of this cycle.

This cycle is effective only for machines with servo-controlled spindle.

Special boring bars for upward cutting are required for this cycle.

Program a positioning block for the starting point (hole center) in the working plane with radius compensation **R0**.

The algebraic sign for the cycle parameter depth determines the working direction. Note: A positive sign bores in the direction of the positive spindle axis.

The entered tool length is the total length to the underside of the boring bar and not just to the tooth.

When calculating the starting point for boring, the TNC considers the tooth length of the boring bar and the thickness of the material.

Danger of collision!
Check the position of the tool tip when you program a spindle orientation to the angle that you enter in **Q336** (for example, in the Positioning with Manual Data Input mode of operation). Set the angle so that the tool tip is parallel to a coordinate axis. Select a disengaging direction in which the tool moves away from the edge of the hole.

Cycle parameters

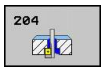

- **Set-up clearance** Q200 (incremental): Distance between tool tip and workpiece surface. Input range 0 to 99999.9999
- **Depth of counterbore** Q249 (incremental): Distance between underside of workpiece and the top of the hole. A positive sign means the hole will be bored in the positive spindle axis direction. Input range -99999.9999 to 99999.9999
- **Material thickness** Q250 (incremental): Thickness of the workpiece. Input range 0.0001 to 99999.9999
- **Off-center distance** Q251 (incremental): Off-center distance for the boring bar; value from tool data sheet. Input range 0.0001 to 99999.9999
- **Tool edge height** Q252 (incremental): Distance between the underside of the boring bar and the main cutting tooth; value from tool data sheet. Input range 0.0001 to 99999.9999
- **Feed rate for pre-positioning** Q253: Traversing speed of the tool in mm/min when plunging into the workpiece, or when retracting from the workpiece. Input range 0 to 99999.999; alternatively **FMAX**, **FAUTO**
- **Feed rate for back boring** Q254: Traversing speed of the tool during back boring in mm/min. Input range 0 to 99999.999; alternatively **FAUTO**, **FU**

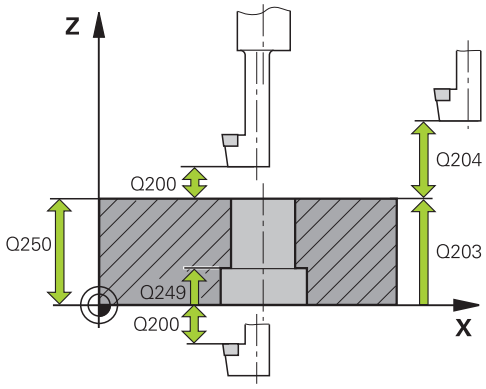

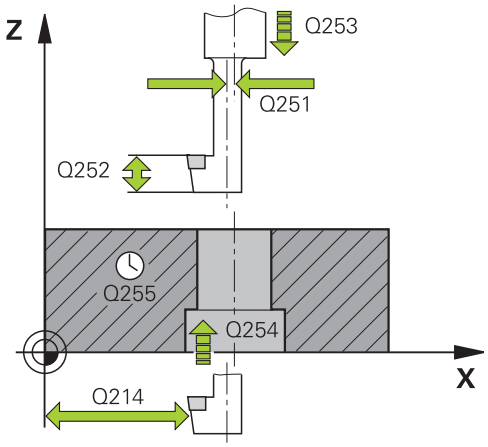

- **Dwell time** Q255: Dwell time in seconds at the top of the bore hole. Input range 0 to 3600.000
- **Coordinate of workpiece surface** Q203 (absolute): Coordinate of the workpiece surface. Input range -99999.9999 to 99999.9999
- **2nd set-up clearance** Q204 (incremental): Coordinate in the spindle axis at which no collision between tool and workpiece (fixtures) can occur. Input range 0 to 99999.9999
- **Disengaging direction (1/2/3/4)** Q214: Determine the direction in which the TNC displaces the tool by the off-center distance (after spindle orientation); programming 0 is not allowed
  1: Retract the tool in minus direction of the principle axis
  2: Retract the tool in minus direction of the minor axis
  3: Retract the tool in plus direction of the principle axis
  4: Retract the tool in plus direction of the minor axis
- **Angle for spindle orientation** Q336 (absolute): Angle at which the TNC positions the tool before it is plunged into or retracted from the bore hole. Input range -360.0000 to 360.0000

NC blocks

```
11 CYCL DEF 204 BACK BORING
    Q200=2      ;SET-UP CLEARANCE
    Q249=+5     ;DEPTH OF COUNTERBORE
    Q250=20     ;MATERIAL THICKNESS
    Q251=3.5    ;OFF-CENTER DISTANCE
    Q252=15     ;TOOL EDGE HEIGHT
    Q253=750    ;F PRE-POSITIONING
    Q254=200    ;F COUNTERBORING
    Q255=0      ;DWELL TIME
    Q203=+20    ;SURFACE COORDINATE
    Q204=50     ;2ND SET-UP CLEARANCE
    Q214=1      ;DISENGAGING DIRECTN
    Q336=0      ;ANGLE OF SPINDLE
```

3.8 UNIVERSAL PECKING (Cycle 205, DIN/ISO: G205)

Cycle run

1 The TNC positions the tool in the tool axis at rapid traverse **FMAX** to the entered set-up clearance above the workpiece surface.
2 If you enter a deepened starting point, the TNC move at the defined positioning feed rate to the set-up clearance above the deepened starting point.
3 The tool drills to the first plunging depth at the entered feed rate **F**.
4 If you have programmed chip breaking, the tool then retracts by the entered retraction value. If you are working without chip breaking, the tool is moved at rapid traverse to the set-up clearance, and then at **FMAX** to the entered starting position above the first plunging depth.
5 The tool then advances with another infeed at the programmed feed rate. If programmed, the plunging depth is decreased after each infeed by the decrement.
6 The TNC repeats this process (2 to 4) until the programmed total hole depth is reached.
7 The tool remains at the hole bottom—if programmed—for the entered dwell time to cut free, and then retracts to set-up clearance at the retraction feed rate. If programmed, the tool moves to the 2nd set-up clearance at **FMAX**.

Please note while programming:

Program a positioning block for the starting point (hole center) in the working plane with radius compensation **R0**.

The algebraic sign for the cycle parameter DEPTH determines the working direction. If you program DEPTH=0, the cycle will not be executed.

If you enter different advance stop distances for **Q258** and **Q259**, the TNC will change the advance stop distances between the first and last plunging depths at the same rate.

If you use **Q379** to enter a deepened starting point, the TNC merely changes the starting point of the infeed movement. Retraction movements are not changed by the TNC, therefore they are calculated with respect to the coordinate of the workpiece surface.

Danger of collision!

Use the machine parameter displayDepthErr to define whether, if a positive depth is entered, the TNC should output an error message (on) or not (off).

Keep in mind that the TNC reverses the calculation for pre-positioning when a **positive depth is entered**. This means that the tool moves at rapid traverse in the tool axis to set-up clearance **below** the workpiece surface!

Cycle parameters

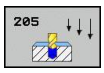

- **Set-up clearance** Q200 (incremental): Distance between tool tip and workpiece surface. Input range 0 to 99999.9999
- **Depth** Q201 (incremental): Distance between workpiece surface and bottom of hole (tip of drill taper). Input range -99999.9999 to 99999.9999
- **Feed rate for plunging** Q206: Traversing speed of the tool during drilling in mm/min. Input range 0 to 99999.999; alternatively **FAUTO**, **FU**
- **Plunging depth** Q202 (incremental): Infeed per cut. Input range 0 to 99999.9999. The depth does not have to be a multiple of the plunging depth. The TNC will go to depth in one movement if:
  - the plunging depth is equal to the depth
  - the plunging depth is greater than the depth
- **Coordinate of workpiece surface** Q203 (absolute): Coordinate of the workpiece surface. Input range -99999.9999 to 99999.9999
- **2nd set-up clearance** Q204 (incremental): Coordinate in the spindle axis at which no collision between tool and workpiece (fixtures) can occur. Input range 0 to 99999.9999
- **Decrement** Q212 (incremental): Value by which the TNC decreases the plunging depth Q202. Input range 0 to 99999.9999
- **Minimum plunging depth** Q205 (incremental): If you have entered a decrement, the TNC limits the plunging depth to the value entered with Q205. Input range 0 to 99999.9999
- **Upper advanced stop distance** Q258 (incremental): Set-up clearance for rapid traverse positioning when the TNC moves the tool again to the current plunging depth after retraction from the hole; value for the first plunging depth. Input range 0 to 99999.9999

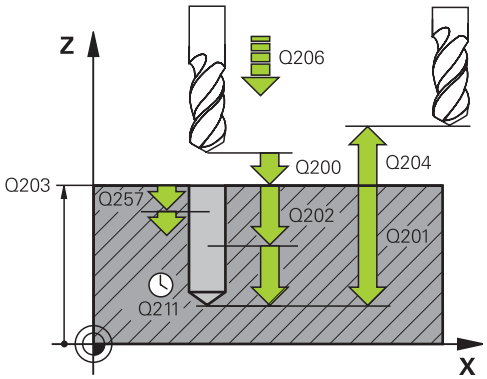

NC blocks

11 CYCL DEF 205 UNIVERSAL PECKING	
Q200=2	;SET-UP CLEARANCE
Q201=-80	;DEPTH
Q206=150	;FEED RATE FOR PLNGNG
Q202=15	;PLUNGING DEPTH
Q203=+100	;SURFACE COORDINATE
Q204=50	;2ND SET-UP CLEARANCE
Q212=0.5	;DECREMENT
Q205=3	;MIN. PLUNGING DEPTH
Q258=0.5	;UPPER ADV. STOP DIST.
Q259=1	;LOWER ADV. STOP DIST.
Q257=5	;DEPTH FOR CHIP BRKNG
Q256=0.2	;DIST. FOR CHIP BRKNG
Q211=0.25	;DWELL TIME AT BOTTOM
Q379=7.5	;START POINT
Q253=750	;F PRE-POSITIONING

- **Lower advanced stop distance** Q259 (incremental): Set-up clearance for rapid traverse positioning when the TNC moves the tool again to the current plunging depth after retraction from the hole; value for the last plunging depth. Input range 0 to 99999.9999
- **Infeed depth for chip breaking** Q257 (incremental): Depth at which the TNC carries out chip breaking. No chip breaking if 0 is entered. Input range 0 to 99999.9999
- **Retraction rate for chip breaking** Q256 (incremental): Value by which the TNC retracts the tool during chip breaking. The TNC retracts the tool at a feed rate of 3000 mm/min. Input range 0.1000 to 99999.9999.
- **Dwell time at depth** Q211: Time in seconds that the tool remains at the hole bottom. Input range 0 to 3600.0000
- **Deepened starting point** Q379 (incremental with respect to the workpiece surface): Starting position of drilling if a shorter tool has already pilot drilled to a certain depth. The TNC moves at the **feed rate for pre-positioning** from the set-up clearance to the deepened starting point. Input range 0 to 99999.9999
- **Feed rate for pre-positioning** Q253: Traversing velocity of the tool during positioning from the set-up clearance to a deepened starting point in mm/min. Effective only if Q379 is entered not equal to 0. Input range 0 to 99999.999, alternatively **FMAX**, **FAUTO**

3.9 BORE MILLING (Cycle 208)

Cycle run

1 The TNC positions the tool in the tool axis at rapid traverse **FMAX** to the programmed set-up clearance above the workpiece surface and then moves the tool to the bore hole circumference on a rounded arc (if enough space is available).
2 The tool mills in a helix from the current position to the first plunging depth at the programmed feed rate **F**.
3 When the drilling depth is reached, the TNC once again traverses a full circle to remove the material remaining after the initial plunge.
4 The TNC then positions the tool at the center of the hole again.
5 Finally the TNC returns to the setup clearance at **FMAX**. If programmed, the tool moves to the 2nd set-up clearance at **FMAX**.

Please note while programming:

Program a positioning block for the starting point (hole center) in the working plane with radius compensation **R0**.

The algebraic sign for the cycle parameter DEPTH determines the working direction. If you program DEPTH=0, the cycle will not be executed.

If you have entered the bore hole diameter to be the same as the tool diameter, the TNC will bore directly to the entered depth without any helical interpolation.

An active mirror function **does not** influence the type of milling defined in the cycle.

Note that if the infeed distance is too large, the tool or the workpiece may be damaged.

To prevent the infeeds from being too large, enter the maximum plunge angle of the tool in the **ANGLE** column of the tool table. The TNC then automatically calculates the max. infeed permitted and changes your entered value accordingly.

Danger of collision!

Use the machine parameter displayDepthErr to define whether, if a positive depth is entered, the TNC should output an error message (on) or not (off).

Keep in mind that the TNC reverses the calculation for pre-positioning when a **positive depth is entered**. This means that the tool moves at rapid traverse in the tool axis to set-up clearance **below** the workpiece surface!

Cycle parameters

- **Set-up clearance** Q200 (incremental): Distance between tool lower edge and workpiece surface. Input range 0 to 99999.9999
- **Depth** Q201 (incremental): Distance between workpiece surface and bottom of hole. Input range -99999.9999 to 99999.9999
- **Feed rate for plunging** Q206: Traversing speed of the tool during helical drilling in mm/min. Input range 0 to 99999.999; alternatively **FAUTO**, **FU**, **FZ**
- **Infeed per helix** Q334 (incremental): Depth of the tool plunge with each helix (=360°). Input range 0 to 99999.9999
- **Coordinate of workpiece surface** Q203 (absolute): Coordinate of the workpiece surface. Input range -99999.9999 to 99999.9999
- **2nd set-up clearance** Q204 (incremental): Coordinate in the spindle axis at which no collision between tool and workpiece (fixtures) can occur. Input range 0 to 99999.9999
- **Nominal diameter** Q335 (absolute value): Bore-hole diameter. If you have entered the nominal diameter to be the same as the tool diameter, the TNC will bore directly to the entered depth without any helical interpolation. Input range 0 to 99999.9999
- **Roughing diameter** Q342 (absolute): As soon as you enter a value greater than 0 in Q342, the TNC no longer checks the ratio between the nominal diameter and the tool diameter. This allows you to rough-mill holes whose diameter is more than twice as large as the tool diameter. Input range 0 to 99999.9999
- **Climb or up-cut** Q351: Type of milling operation with M3
  +1 = climb
  –1 = up-cut

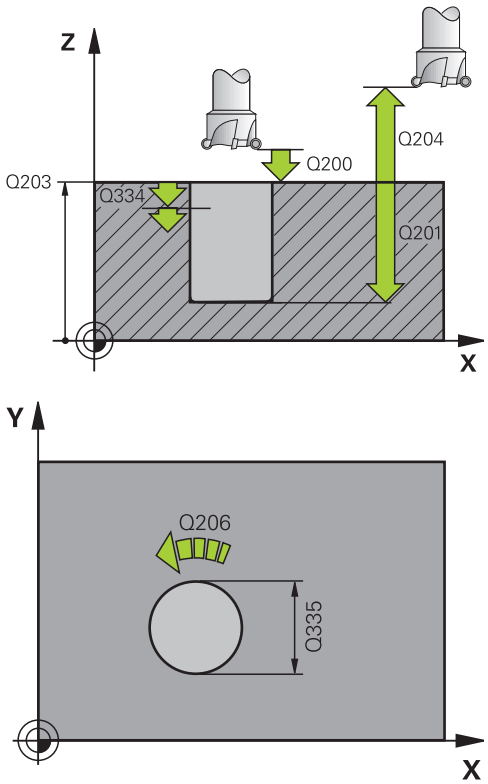

NC blocks

12 CYCL DEF 208 BORE MILLING	
Q200=2	;SET-UP CLEARANCE
Q201=-80	;DEPTH
Q206=150	;FEED RATE FOR PLNGNG
Q334=1.5	;PLUNGING DEPTH
Q203=+100	;SURFACE COORDINATE
Q204=50	;2ND SET-UP CLEARANCE
Q335=25	;NOMINAL DIAMETER
Q342=0	;ROUGHING DIAMETER
Q351=+1	;CLIMB OR UP-CUT

3.10 SINGLE-LIP D.H.DRLNG (Cycle 241, DIN/ISO: G241)

Cycle run

1 The TNC positions the tool in the tool axis at rapid traverse **FMAX** to the entered set-up clearance above the workpiece surface.
2 Then the TNC moves the tool at the defined positioning feed rate to the set-up clearance above the deepened starting point and activates the drilling speed (**M3**) and the coolant. The TNC executes the approach motion with the direction of rotation defined in the cycle, with clockwise, counterclockwise or stationary spindle.
3 The tool drills to the entered drilling depth at the programmed feed rate **F**.
4 If programmed, the tool remains at the hole bottom for chip breaking. Then the TNC switches off the coolant and resets the drilling speed to the value defined for retraction.
5 After the dwell time at the hole bottom, the tool is retracted to the set-up clearance at the retraction feed rate. If programmed, the tool moves to the 2nd set-up clearance at **FMAX**.

Please note while programming:

Program a positioning block for the starting point (hole center) in the working plane with radius compensation **R0**.

The algebraic sign for the cycle parameter DEPTH determines the working direction. If you program DEPTH=0, the cycle will not be executed.

Danger of collision!

Use the machine parameter displayDepthErr to define whether, if a positive depth is entered, the TNC should output an error message (on) or not (off).

Keep in mind that the TNC reverses the calculation for pre-positioning when a **positive depth is entered**. This means that the tool moves at rapid traverse in the tool axis to set-up clearance **below** the workpiece surface!

Cycle parameters

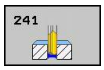

- **Set-up clearance** Q200 (incremental): Distance between tool tip and workpiece surface. Input range 0 to 99999.9999
- **Depth** Q201 (incremental): Distance between workpiece surface and bottom of hole. Input range -99999.9999 to 99999.9999
- **Feed rate for plunging** Q206: Traversing speed of the tool during drilling in mm/min. Input range 0 to 99999.999; alternatively **FAUTO**, **FU**
- **Dwell time at depth** Q211: Time in seconds that the tool remains at the hole bottom. Input range 0 to 3600.0000
- **Coordinate of workpiece surface** Q203 (absolute): Coordinate of the workpiece surface. Input range -99999.9999 to 99999.9999
- **2nd set-up clearance** Q204 (incremental): Coordinate in the spindle axis at which no collision between tool and workpiece (fixtures) can occur. Input range 0 to 99999.9999
- **Deepened starting point** Q379 (incremental with respect to the workpiece surface): Starting position for actual drilling operation. The TNC moves at the **feed rate for pre-positioning** from the set-up clearance to the deepened starting point. Input range 0 to 99999.9999
- **Feed rate for pre-positioning** Q253: Traversing velocity of the tool during positioning from the set-up clearance to the deepened starting point in mm/min. Effective only if Q379 is entered not equal to 0. Input range 0 to 99999.999, alternatively **FMAX**, **FAUTO**
- **Retraction feed rate** Q208: Traversing speed of the tool in mm/min when retracting from the hole. If you enter Q208 = 0, the TNC retracts the tool at the feed rate in Q206. Input range 0 to 99999.999, alternatively **FMAX**, **FAUTO**
- **Rotat. dir. of entry/exit (3/4/5)** Q426: Desired direction of spindle rotation when tool moves into and retracts from the hole. Input:
  3: Turn the spindle with M3
  4: Turn the spindle with M4
  5: Move with stationary spindle
- **Spindle speed of entry/exit** Q427: Desired spindle speed when tool moves into and retracts from the hole. Input range 0 to 99999

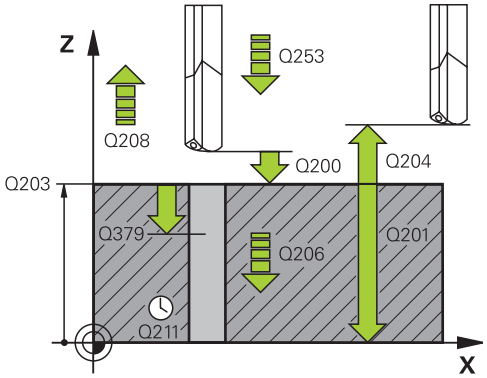

NC blocks

11 CYCL DEF 241 SINGLE-LIP D.H.DRLNG	
Q200=2	;SET-UP CLEARANCE
Q201=-80	;DEPTH
Q206=150	;FEED RATE FOR PLNGNG
Q211=0.25	;DWELL TIME AT BOTTOM
Q203=+100	;SURFACE COORDINATE
Q204=50	;2ND SET-UP CLEARANCE
Q379=7.5	;START POINT
Q253=750	;F PRE-POSITIONING
Q208=1000	;RETRACTION FEED RATE
Q426=3	;DIR. OF SPINDLE ROT.
Q427=25	;ROT. SPEED INFEED/OUT
Q428=500	;DRILLING SPEED
Q429=8	;COOLANT ON
Q430=9	;COOLANT OFF

- **Drilling speed** Q428: Desired speed for drilling. Input range 0 to 99999
- **M function for coolant on?** Q429: M function for switching on the coolant. The TNC switches the coolant on if the tool is in the hole at the deepened starting point. Input range 0 to 999
- **M function for coolant off?** Q430: M function for switching off the coolant. The TNC switches the coolant off if the tool is at the hole depth. Input range 0 to 999

3.11 Programming Examples

Example: Drilling cycles

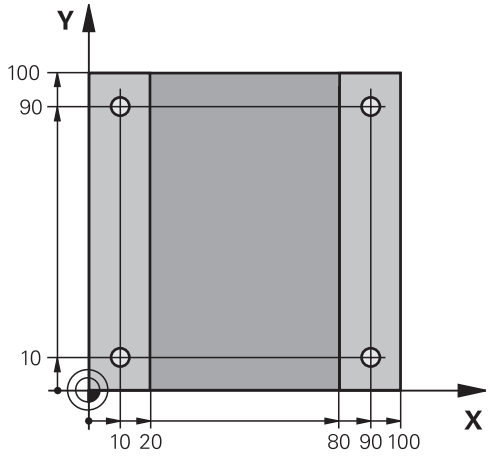

0 BEGIN PGM C200 MM	
1 BLK FORM 0.1 Z X+0 Y+0 Z-20	Definition of workpiece blank
2 BLK FORM 0.2 X+100 Y+100 Z+0	
3 TOOL CALL 1 Z S4500	Tool call (tool radius 3)
4 L Z+250 R0 FMAX	Retract the tool
5 CYCL DEF 200 DRILLING	Cycle definition
Q200=2 ;SET-UP CLEARANCE	
Q201=-15 ;DEPTH	
Q206=250 ;FEED RATE FOR PLNGNG	
Q202=5 ;PLUNGING DEPTH	
Q210=0 ;DWELL TIME AT TOP	
Q203=-10 ;SURFACE COORDINATE	
Q204=20 ;2ND SET-UP CLEARANCE	
Q211=0.2 ;DWELL TIME AT BOTTOM	
6 L X+10 Y+10 R0 FMAX M3	Approach hole 1, spindle ON
7 CYCL CALL	Cycle call
8 L Y+90 R0 FMAX M99	Approach hole 2, call cycle
9 L X+90 R0 FMAX M99	Approach hole 3, call cycle
10 L Y+10 R0 FMAX M99	Approach hole 4, call cycle
11 L Z+250 R0 FMAX M2	Retract in the tool axis, end program
12 END PGM C200 MM	

Example: Using drilling cycles in connection with PATTERN DEF

The drill hole coordinates are stored in the pattern definition PATTERN DEF POS and are called by the TNC with CYCL CALL PAT.

The tool radii are selected so that all work steps can be seen in the test graphics.

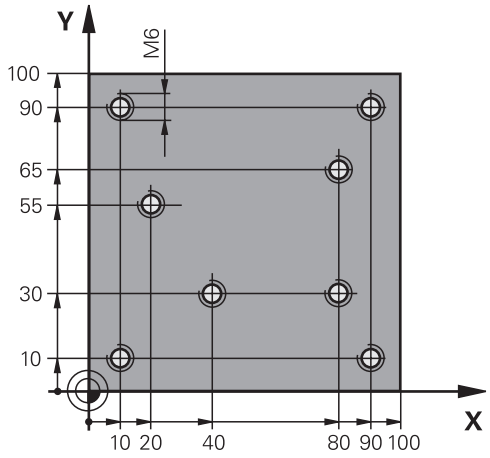

Program sequence

- Centering (tool radius 4)
- Drilling (tool radius 2.4)
- Tapping (tool radius 3)

0 BEGIN PGM 1 MM	
1 BLK FORM 0.1 Z X+0 Y+0 Z-20	Definition of workpiece blank
2 BLK FORM 0.2 X+100 Y+100 Y+0	
3 TOOL CALL 1 Z S5000	Call the centering tool (tool radius 4)
4 L Z+10 R0 F5000	Move tool to clearance height (enter a value for F): the TNC positions to the clearance height after every cycle
5 PATTERN DEF	Define all drilling positions in the point pattern
POS1(X+10 Y+10 Z+0)	
POS2(X+40 Y+30 Z+0)	
POS3(X+20 Y+55 Z+0)	
POS4(X+10 Y+90 Z+0)	
POS5(X+90 Y+90 Z+0)	
POS6(X+80 Y+65 Z+0)	
POS7(X+80 Y+30 Z+0)	
POS8(X+90 Y+10 Z+0)	
6 CYCL DEF 240 CENTERING	Cycle definition: CENTERING
Q200=2 ;SET-UP CLEARANCE	
Q343=0 ;SELECT DEPTH/DIA.	
Q201=-2 ;DEPTH	
Q344=-10 ;DIAMETER	
Q206=150 ;FEED RATE FOR PLNGNG	
Q211=0 ;DWELL TIME AT BOTTOM	
Q203=+0 ;SURFACE COORDINATE	
Q204=50 ;2ND SET-UP CLEARANCE	
7 CYCL CALL PAT F5000 M13	Call the cycle in connection with the hole pattern
8 L Z+100 R0 FMAX	Retract the tool, change the tool
9 TOOL CALL 2 Z S5000	Call the drilling tool (radius 2.4)
10 L Z+10 R0 F5000	Move tool to clearance height (enter a value for F)
11 CYCL DEF 200 DRILLING	Cycle definition: drilling

Q200=2	;SET-UP CLEARANCE	
Q201=-25	;DEPTH	
Q206=150	;FEED RATE FOR PLNGNG	
Q202=5	;PLUNGING DEPTH	
Q211=0	;DWELL TIME AT TOP	
Q203=+0	;SURFACE COORDINATE	
Q204=50	;2ND SET-UP CLEARANCE	
Q211=0.2	;DWELL TIME AT BOTTOM	
12 CYCL CALL PAT F5000 M13		Call the cycle in connection with the hole pattern
13 L Z+100 R0 FMAX		Retract the tool
14 TOOL CALL 3 Z S200		Call the tapping tool (radius 3)
15 L Z+50 R0 FMAX		Move tool to clearance height
16 CYCL DEF 206 TAPPING NEW		Cycle definition for tapping
Q200=2	;SET-UP CLEARANCE	
Q201=-25	;THREAD DEPTH	
Q206=150	;FEED RATE FOR PLNGNG	
Q211=0	;DWELL TIME AT BOTTOM	
Q203=+0	;SURFACE COORDINATE	
Q204=50	;2ND SET-UP CLEARANCE	
17 CYCL CALL PAT F5000 M13		Call the cycle in connection with the hole pattern
18 L Z+100 R0 FMAX M2		Retract the tool, end program
19 END PGM 1 MM		

4

Fixed Cycles: Tapping / Thread Milling

4.1 Fundamentals

Overview

The TNC offers 8 cycles for all types of threading operations:

Cycle	Soft key	Page
206 TAPPING NEW With a floating tap holder, with automatic pre-positioning, 2nd set-up clearance	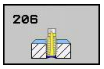	89
207 TAPPING NEW Without a floating tap holder, with automatic pre-positioning, 2nd set-up clearance	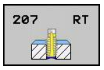	91
209 TAPPING WITH CHIP BREAKING Without a floating tap holder, with automatic pre-positioning, 2nd set-up clearance, chip breaking	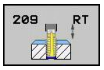	93
262 THREAD MILLING Cycle for milling a thread in pre-drilled material	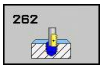	99
263 THREAD MILLING/ COUNTERSINKING Cycle for milling a thread in pre-drilled material and machining a countersunk chamfer		102
264 THREAD DRILLING/MILLING Cycle for drilling into solid material with subsequent milling of the thread with a tool		105
265 HELICAL THREAD DRILLING/ MILLING Cycle for milling the thread into solid material		108
267 OUTSIDE THREAD MILLING Cycle for milling an external thread and machining a countersunk chamfer	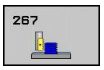	112

4.2 TAPPING NEW with a floating tap holder (Cycle 206, DIN/ISO: G206)

Cycle run

1 The TNC positions the tool in the tool axis at rapid traverse **FMAX** to the entered set-up clearance above the workpiece surface.
2 The tool drills to the total hole depth in one movement.
3 Once the tool has reached the total hole depth, the direction of spindle rotation is reversed and the tool is retracted to the set-up clearance at the end of the dwell time. If programmed, the tool moves to the 2nd set-up clearance at **FMAX**.
4 At the set-up clearance, the direction of spindle rotation reverses once again.

Please note while programming:

Program a positioning block for the starting point (hole center) in the working plane with radius compensation **R0**.

The algebraic sign for the cycle parameter DEPTH determines the working direction. If you program DEPTH=0, the cycle will not be executed.

A floating tap holder is required for tapping. It must compensate the tolerances between feed rate and spindle speed during the tapping process.

When a cycle is being run, the spindle speed override knob is disabled. The feed-rate override knob is active only within a limited range, which is defined by the machine tool builder (refer to your machine manual).

For tapping right-hand threads activate the spindle with **M3**, for left-hand threads use **M4**.

Danger of collision!

Use the machine parameter displayDepthErr to define whether, if a positive depth is entered, the TNC should output an error message (on) or not (off).

Keep in mind that the TNC reverses the calculation for pre-positioning when a **positive depth is entered**. This means that the tool moves at rapid traverse in the tool axis to set-up clearance **below** the workpiece surface!

4.2 TAPPING NEW with a floating tap holder (Cycle 206, DIN/ISO: G206)

Cycle parameters

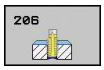

- **Set-up clearance** Q200 (incremental): Distance between tool tip and workpiece surface. Input range 0 to 99999.9999

  Guide value: 4x pitch.
- **Thread depth** Q201 (incremental): Distance between workpiece surface and root of thread. Input range -99999.9999 to 99999.9999
- **Feed rate F** Q206: Traversing speed of the tool during tapping. Input range 0 to 99999.999 alternatively **FAUTO**
- **Dwell time at bottom** Q211: Enter a value between 0 and 0.5 seconds to avoid wedging of the tool during retraction. Input range 0 to 3600.0000
- **Coordinate of workpiece surface** Q203 (absolute): Coordinate of the workpiece surface. Input range -99999.9999 to 99999.9999
- **2nd set-up clearance** Q204 (incremental): Coordinate in the spindle axis at which no collision between tool and workpiece (fixtures) can occur. Input range 0 to 99999.9999

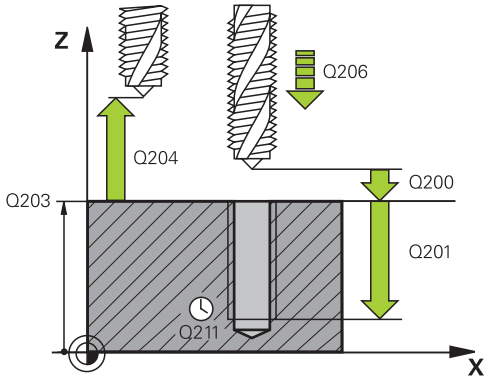

NC blocks

25 CYCL DEF 206 TAPPING NEW	
Q200=2	**;SET-UP CLEARANCE**
Q201=-20	**;DEPTH**
Q206=150	**;FEED RATE FOR PLNGNG**
Q211=0.25	**;DWELL TIME AT BOTTOM**
Q203=+25	**;SURFACE COORDINATE**
Q204=50	**;2ND SET-UP CLEARANCE**

The feed rate is calculated as follows: F = S x p

F: Feed rate (mm/min)
S: Spindle speed (rpm)
p: Thread pitch (mm)

Retracting after a program interruption

If you interrupt program run during tapping with the machine stop button, the TNC will display a soft key with which you can retract the tool.

4.3 RIGID TAPPING without a floating tap holder NEW (Cycle 207, DIN/ISO: G207)

Cycle run

The TNC cuts the thread without a floating tap holder in one or more passes.

1 The TNC positions the tool in the tool axis at rapid traverse **FMAX** to the entered set-up clearance above the workpiece surface.
2 The tool drills to the total hole depth in one movement.
3 Once the tool has reached the total hole depth, the direction of spindle rotation is reversed and the tool is retracted to the set-up clearance at the end of the dwell time. If programmed, the tool moves to the 2nd set-up clearance at **FMAX**.
4 The TNC stops the spindle turning at set-up clearance.

Please note while programming:

Machine and TNC must be specially prepared by the machine tool builder for use of this cycle.

This cycle is effective only for machines with servo-controlled spindle.

Program a positioning block for the starting point (hole center) in the working plane with radius compensation **R0**.

The algebraic sign for the cycle parameter DEPTH determines the working direction. If you program DEPTH=0, the cycle will not be executed.

The TNC calculates the feed rate from the spindle speed. If the feed-rate override is used during tapping, the TNC automatically adjusts the feed rate.

The feed-rate override knob is disabled.

At the end of the cycle the spindle comes to a stop. Before the next operation, restart the spindle with **M3** (or **M4**).

Danger of collision!

Use the machine parameter displayDepthErr to define whether, if a positive depth is entered, the TNC should output an error message (on) or not (off).

Keep in mind that the TNC reverses the calculation for pre-positioning when a **positive depth is entered**. This means that the tool moves at rapid traverse in the tool axis to set-up clearance **below** the workpiece surface!

4.3 RIGID TAPPING without a floating tap holder NEW (Cycle 207, DIN/ ISO: G207)

Cycle parameters

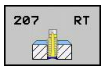

- **Set-up clearance** Q200 (incremental): Distance between tool tip and workpiece surface. Input range 0 to 99999.9999
- **Thread depth** Q201 (incremental): Distance between workpiece surface and root of thread. Input range -99999.9999 to 99999.9999
- **Thread pitch** Q239: Pitch of the thread. The algebraic sign differentiates between right-hand and left-hand threads:
  + = right-hand thread
  –= left-hand thread Input range -99.9999 to 99.9999
- **Coordinate of workpiece surface** Q203 (absolute): Coordinate of the workpiece surface. Input range -99999.9999 to 99999.9999
- **2nd set-up clearance** Q204 (incremental): Coordinate in the spindle axis at which no collision between tool and workpiece (fixtures) can occur. Input range 0 to 99999.9999

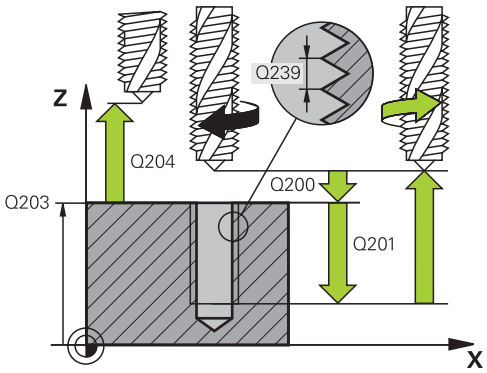

NC blocks

26 CYCL DEF 207 RIGID TAPPING NEW	
Q200=2	;SET-UP CLEARANCE
Q201=-20	;DEPTH
Q239=+1	;THREAD PITCH
Q203=+25	;SURFACE COORDINATE
Q204=50	;2ND SET-UP CLEARANCE

Retracting after a program interruption

If you interrupt program run during thread cutting with the machine stop button, the TNC will display the MANUAL OPERATION soft key. If you press MANUAL OPERATION, you can retract the tool under program control. Simply press the positive axis direction button of the active spindle axis.

4.4 TAPPING WITH CHIP BREAKING (Cycle 209, DIN/ISO: G209)

Cycle run

The TNC machines the thread in several passes until it reaches the programmed depth. You can define in a parameter whether the tool is to be retracted completely from the hole for chip breaking.

1 The TNC positions the tool in the tool axis at rapid traverse **FMAX** to the programmed set-up clearance above the workpiece surface. There it carries out an oriented spindle stop.
2 The tool moves to the programmed infeed depth, reverses the direction of spindle rotation and retracts by a specific distance or completely for chip release, depending on the definition. If you have defined a factor for increasing the spindle speed, the TNC retracts from the hole at the corresponding speed.
3 It then reverses the direction of spindle rotation again and advances to the next infeed depth.
4 The TNC repeats this process (2 to 3) until the programmed thread depth is reached.
5 The tool is then retracted to set-up clearance. If programmed, the tool moves to the 2nd set-up clearance at **FMAX**.
6 The TNC stops the spindle turning at set-up clearance.

4.4 TAPPING WITH CHIP BREAKING (Cycle 209, DIN/ISO: G209)

Please note while programming:

Machine and TNC must be specially prepared by the machine tool builder for use of this cycle.

This cycle is effective only for machines with servo-controlled spindle.

Program a positioning block for the starting point (hole center) in the working plane with radius compensation **R0**.

The algebraic sign for the cycle parameter "thread depth" determines the working direction.

The TNC calculates the feed rate from the spindle speed. If the feed-rate override is used during tapping, the TNC automatically adjusts the feed rate.

The feed-rate override knob is disabled.

If you defined an rpm factor for fast retraction in cycle parameter **Q403**, the TNC limits the speed to the maximum speed of the active gear range.

At the end of the cycle the spindle comes to a stop. Before the next operation, restart the spindle with **M3** (or **M4**).

Danger of collision!

Use the machine parameter displayDepthErr to define whether, if a positive depth is entered, the TNC should output an error message (on) or not (off).

Keep in mind that the TNC reverses the calculation for pre-positioning when a **positive depth is entered**. This means that the tool moves at rapid traverse in the tool axis to set-up clearance **below** the workpiece surface!

Cycle parameters

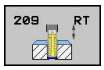

- **Set-up clearance** Q200 (incremental): Distance between tool tip and workpiece surface. Input range 0 to 99999.9999
- **Thread depth** Q201 (incremental): Distance between workpiece surface and root of thread. Input range -99999.9999 to 99999.9999
- **Thread pitch** Q239: Pitch of the thread. The algebraic sign differentiates between right-hand and left-hand threads:
  + = right-hand thread
  –= left-hand thread Input range -99.9999 to 99.9999
- **Coordinate of workpiece surface** Q203 (absolute): Coordinate of the workpiece surface. Input range -99999.9999 to 99999.9999
- **2nd set-up clearance** Q204 (incremental): Coordinate in the spindle axis at which no collision between tool and workpiece (fixtures) can occur. Input range 0 to 99999.9999
- **Infeed depth for chip breaking** Q257 (incremental): Depth at which the TNC carries out chip breaking. No chip breaking if 0 is entered. Input range 0 to 99999.9999
- **Retraction rate for chip breaking** Q256: The TNC multiplies the pitch Q239 by the programmed value and retracts the tool by the calculated value during chip breaking. If you enter Q256 = 0, the TNC retracts the tool completely from the hole (to the set-up clearance) for chip breaking. Input range 0.1000 to 99999.9999

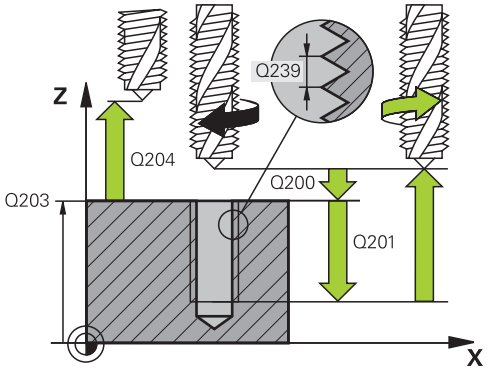

NC blocks

26 CYCL DEF 209 TAPPING W/ CHIP BRKG	
Q200=2	;SET-UP CLEARANCE
Q201=-20	;DEPTH
Q239=+1	;THREAD PITCH
Q203=+25	;SURFACE COORDINATE
Q204=50	;2ND SET-UP CLEARANCE
Q257=5	;DEPTH FOR CHIP BRKNG
Q256=+25	;DIST. FOR CHIP BRKNG
Q336=50	;ANGLE OF SPINDLE
Q403=1.5	;RPM FACTOR

- **Angle for spindle orientation** Q336 (absolute): Angle at which the TNC positions the tool before machining the thread. This allows you to regroove the thread, if required. Input range -360.0000 to 360.0000
- **RPM factor for retraction** Q403: Factor by which the TNC increases the spindle speed—and therefore also the retraction feed rate—when retracting from the drill hole. Input range 0.0001 to 10 Maximum increase to maximum speed of the active gear range

Retracting after a program interruption

If you interrupt program run during thread cutting with the machine stop button, the TNC will display the MANUAL OPERATION soft key. If you press the MANUAL OPERATION key, you can retract the tool under program control. Simply press the positive axis direction button of the active spindle axis.

4.5 Fundamentals of Thread Milling

Prerequisites

- Your machine tool should feature internal spindle cooling (cooling lubricant at least 30 bars, compressed air supply at least 6 bars).
- Thread milling usually leads to distortions of the thread profile. To correct this effect, you need tool-specific compensation values which are given in the tool catalog or are available from the tool manufacturer. You program the compensation with the delta value for the tool radius **DR** in the **TOOL CALL**.
- The Cycles 262, 263, 264 and 267 can only be used with rightward rotating tools. For Cycle 265 you can use rightward and leftward rotating tools.
- The working direction is determined by the following input parameters: Algebraic sign Q239 (+ = right-hand thread / – = left-hand thread) and milling method Q351 (+1 = climb / –1 = up-cut). The table below illustrates the interrelation between the individual input parameters for rightward rotating tools.

Internal thread	Pitch	Climb/ Up-cut	Work direction
Right-handed	+	+1(RL)	Z+
Left-handed	–	–1(RR)	Z+
Right-handed	+	–1(RR)	Z–
Left-handed	–	+1(RL)	Z–
External thread	**Pitch**	**Climb/ Up-cut**	**Work direction**
Right-handed	+	+1(RL)	Z–
Left-handed	–	–1(RR)	Z–
Right-handed	+	–1(RR)	Z+
Left-handed	–	+1(RL)	Z+

The TNC references the programmed feed rate during thread milling to the tool cutting edge. Since the TNC, however, always displays the feed rate relative to the path of the tool tip, the displayed value does not match the programmed value.

The machining direction of the thread changes if you execute a thread milling cycle in connection with Cycle 8 MIRROR IMAGE in only one axis.

Danger of collision!

Always program the same algebraic sign for the infeeds: Cycles comprise several sequences of operation that are independent of each other.
The order of precedence according to which the work direction is determined is described with the individual cycles. For example, if you only want to repeat the countersinking process of a cycle, enter 0 for the thread depth. The work direction will then be determined from the countersinking depth.

Procedure in case of a tool break

If a tool break occurs during thread cutting, stop program run, change to the Positioning with MDI operating mode and move the tool on a linear path to the hole center. You can then retract the tool in the infeed axis and replace it.

4.6 THREAD MILLING (Cycle 262, DIN/ISO: G262)

Cycle run

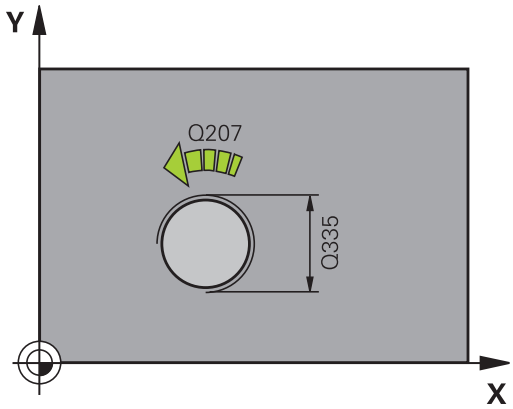

1 The TNC positions the tool in the tool axis at rapid traverse **FMAX** to the entered set-up clearance above the workpiece surface.
2 The tool moves at the programmed feed rate for pre-positioning to the starting plane. The starting plane is derived from the algebraic sign of the thread pitch, the milling method (climb or up-cut milling) and the number of threads per step.
3 The tool then moves tangentially on a helical path to the thread major diameter. Before the helical approach, a compensating motion of the tool axis is carried out in order to begin at the programmed starting plane for the thread path.
4 Depending on the setting of the parameter for the number of threads, the tool mills the thread in one helical movement, in several offset helical movements or in one continuous helical movement.
5 After that the tool departs the contour tangentially and returns to the starting point in the working plane.
6 At the end of the cycle, the TNC retracts the tool in rapid traverse to setup clearance or, if programmed, to the 2nd setup clearance.

Please note while programming:

Program a positioning block for the starting point (hole center) in the working plane with radius compensation **R0**.

The algebraic sign for the cycle parameter "thread depth" determines the working direction.

If you program the thread DEPTH = 0, the cycle will not be executed.

The nominal thread diameter is approached in a semi-circle from the center. A pre-positioning movement to the side is carried out if the pitch of the tool diameter is four times smaller than the nominal thread diameter.

Note that the TNC makes a compensation movement in the tool axis before the approach movement. The length of the compensation movement is at most half of the thread pitch. Ensure sufficient space in the hole!

If you change the thread depth, the TNC automatically changes the starting point for the helical movement.

Danger of collision!

Use the machine parameter displayDepthErr to define whether, if a positive depth is entered, the TNC should output an error message (on) or not (off).

Keep in mind that the TNC reverses the calculation for pre-positioning when a **positive depth is entered**. This means that the tool moves at rapid traverse in the tool axis to set-up clearance **below** the workpiece surface!

Cycle parameters

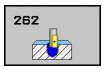

- **Nominal diameter** Q335: Nominal thread diameter. Input range 0 to 99999.9999
- **Thread pitch** Q239: Pitch of the thread. The algebraic sign differentiates between right-hand and left-hand threads:
  + = right-hand thread
  –= left-hand thread Input range -99.9999 to 99.9999
- **Thread depth** Q201 (incremental): Distance between workpiece surface and root of thread. Input range -99999.9999 to 99999.9999
- **Threads per step** Q355: Number of thread starts by which the tool is displaced:
  0 = one helix on the thread depth
  1 = continuous helix on the complete thread length
  >1 = several helix paths with approach and departure, between these the TNC sets the tool by Q355 x pitch. Input range 0 to 99999
- **Feed rate for pre-positioning** Q253: Traversing speed of the tool when moving in and out of the workpiece, in mm/min. Input range 0 to 99999.9999 alternatively **FMAX**, **FAUTO**
- **Climb or up-cut** Q351: Type of milling operation with M3
  +1 = climb
  –1 = up-cut
- **Set-up clearance** Q200 (incremental): Distance between tool tip and workpiece surface. Input range 0 to 99999.9999
- **Coordinate of workpiece surface** Q203 (absolute): Coordinate of the workpiece surface. Input range -99999.9999 to 99999.9999
- **2nd set-up clearance** Q204 (incremental): Coordinate in the spindle axis at which no collision between tool and workpiece (fixtures) can occur. Input range 0 to 99999.9999
- **Feed rate for milling** Q207: Traversing speed of the tool in mm/min while milling. Input range 0 to 99999.999 alternatively **FAUTO**

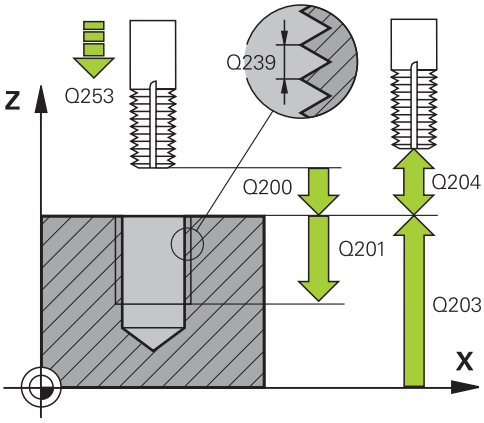

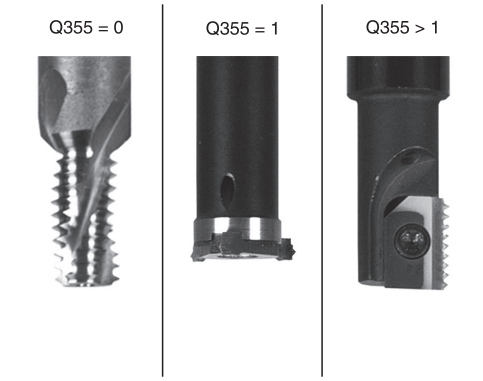

NC blocks

25 CYCL DEF 262 THREAD MILLING	
Q335=10	;NOMINAL DIAMETER
Q239=+1.5	;THREAD PITCH
Q201=-20	;THREAD DEPTH
Q355=0	;THREADS PER STEP
Q253=750	;F PRE-POSITIONING
Q351=+1	;CLIMB OR UP-CUT
Q200=2	;SET-UP CLEARANCE
Q203=+30	;SURFACE COORDINATE
Q204=50	;2ND SET-UP CLEARANCE
Q207=500	;FEED RATE FOR MILLING

4.7 THREAD MILLING/COUNTERSINKING (Cycle 263, DIN/ISO:G263)

Cycle run

1 The TNC positions the tool in the tool axis at rapid traverse **FMAX** to the entered set-up clearance above the workpiece surface.

Countersinking

2 The tool moves at the feed rate for pre-positioning to the countersinking depth minus the set-up clearance, and then at the feed rate for countersinking to the countersinking depth.

3 If a safety clearance to the side has been entered, the TNC immediately positions the tool at the feed rate for pre-positioning to the countersinking depth.

4 Then, depending on the available space, the TNC makes a tangential approach to the core diameter, either tangentially from the center or with a pre-positioning move to the side, and follows a circular path.

Countersinking at front

5 The tool moves at the feed rate for pre-positioning to the sinking depth at front.

6 The TNC positions the tool without compensation from the center on a semicircle to the offset at front, and then follows a circular path at the feed rate for countersinking.

7 The tool then moves in a semicircle to the hole center.

Thread milling

8 The TNC moves the tool at the programmed feed rate for pre-positioning to the starting plane for the thread. The starting plane is determined from the thread pitch and the type of milling (climb or up-cut).

9 Then the tool moves tangentially on a helical path to the thread diameter and mills the thread with a 360° helical motion.

10 After that the tool departs the contour tangentially and returns to the starting point in the working plane.

11 At the end of the cycle, the TNC retracts the tool in rapid traverse to setup clearance or, if programmed, to the 2nd setup clearance.

Please note while programming:

Program a positioning block for the starting point (hole center) in the working plane with radius compensation **R0**.

The algebraic sign of the cycle parameters depth of thread, countersinking depth or sinking depth at front determines the working direction. The working direction is defined in the following sequence:
1. Thread depth
2. Countersinking depth
3. Depth at front

If you program a depth parameter to be 0, the TNC does not execute that step.

If you want to countersink at front, define the countersinking depth as 0.

Program the thread depth as a value smaller than the countersinking depth by at least one-third the thread pitch.

Danger of collision!

Use the machine parameter displayDepthErr to define whether, if a positive depth is entered, the TNC should output an error message (on) or not (off).

Keep in mind that the TNC reverses the calculation for pre-positioning when a **positive depth is entered**. This means that the tool moves at rapid traverse in the tool axis to set-up clearance **below** the workpiece surface!

Cycle parameters

- **Nominal diameter** Q335: Nominal thread diameter. Input range 0 to 99999.9999
- **Thread pitch** Q239: Pitch of the thread. The algebraic sign differentiates between right-hand and left-hand threads:
  + = right-hand thread
  –= left-hand thread Input range -99.9999 to 99.9999
- **Thread depth** Q201 (incremental): Distance between workpiece surface and root of thread. Input range -99999.9999 to 99999.9999
- **Countersinking depth** Q356 (incremental): Distance between tool tip and the top surface of the workpiece. Input range -99999.9999 to 99999.9999
- **Feed rate for pre-positioning** Q253: Traversing speed of the tool when moving in and out of the workpiece, in mm/min. Input range 0 to 99999.9999 alternatively **FMAX**, **FAUTO**

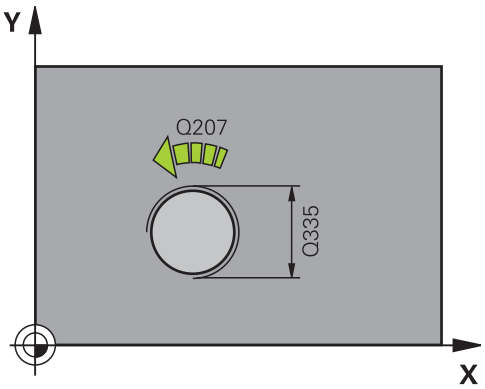

- **Climb or up-cut** Q351: Type of milling operation with M3
  +1 = climb
  –1 = up-cut
- **Set-up clearance** Q200 (incremental): Distance between tool tip and workpiece surface. Input range 0 to 99999.9999
- **Set-up clearance to the side** Q357 (incremental): Distance between tool tooth and the wall of the hole. Input range 0 to 99999.9999
- **Depth at front** Q358 (incremental): Distance between tool tip and the top surface of the workpiece for countersinking at front. Input range -99999.9999 to 99999.9999
- **Countersinking offset at front** Q359 (incremental): Distance by which the TNC moves the tool center away from the hole center. Input range 0 to 99999.9999
- **Coordinate of workpiece surface** Q203 (absolute): Coordinate of the workpiece surface. Input range -99999.9999 to 99999.9999
- **2nd set-up clearance** Q204 (incremental): Coordinate in the spindle axis at which no collision between tool and workpiece (fixtures) can occur. Input range 0 to 99999.9999
- **Feed rate for countersinking** Q254: Traversing speed of the tool during countersinking in mm/min. Input range 0 to 99999.9999 alternatively **FAUTO**, **FU**
- **Feed rate for milling** Q207: Traversing speed of the tool in mm/min while milling. Input range 0 to 99999.999 alternatively **FAUTO**

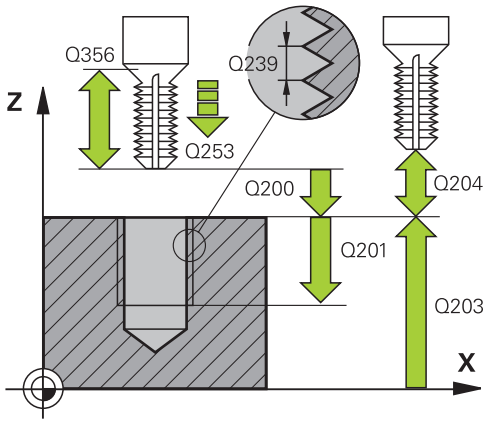

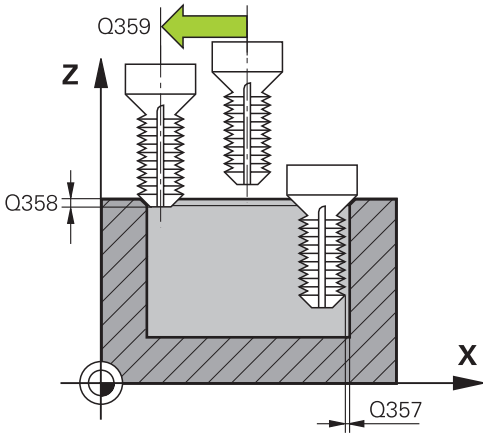

NC blocks

25 CYCL DEF 263 THREAD MLLNG/ CNTSNKG	
Q335=10	**;NOMINAL DIAMETER**
Q239=+1.5	**;THREAD PITCH**
Q201=-16	**;THREAD DEPTH**
Q356=-20	**;COUNTERSINKING DEPTH**
Q253=750	**;F PRE-POSITIONING**
Q351=+1	**;CLIMB OR UP-CUT**
Q200=2	**;SET-UP CLEARANCE**
Q357=0.2	**;CLEARANCE TO SIDE**
Q358=+0	**;DEPTH AT FRONT**
Q359=+0	**;OFFSET AT FRONT**
Q203=+30	**;SURFACE COORDINATE**
Q204=50	**;2ND SET-UP CLEARANCE**
Q254=150	**;F COUNTERBORING**
Q207=500	**;FEED RATE FOR MILLING**

4.8 THREAD DRILLING/MILLING (Cycle 264, DIN/ISO: G264)

Cycle run

1 The TNC positions the tool in the tool axis at rapid traverse **FMAX** to the entered set-up clearance above the workpiece surface.

Drilling

2 The tool drills to the first plunging depth at the programmed feed rate for plunging.

3 If you have programmed chip breaking, the tool then retracts by the entered retraction value. If you are working without chip breaking, the tool is moved at rapid traverse to the set-up clearance, and then at **FMAX** to the entered starting position above the first plunging depth.

4 The tool then advances with another infeed at the programmed feed rate.

5 The TNC repeats this process (2 to 4) until the programmed total hole depth is reached.

Countersinking at front

6 The tool moves at the feed rate for pre-positioning to the sinking depth at front.

7 The TNC positions the tool without compensation from the center on a semicircle to the offset at front, and then follows a circular path at the feed rate for countersinking.

8 The tool then moves in a semicircle to the hole center.

Thread milling

9 The TNC moves the tool at the programmed feed rate for pre-positioning to the starting plane for the thread. The starting plane is determined from the thread pitch and the type of milling (climb or up-cut).

10 Then the tool moves tangentially on a helical path to the thread diameter and mills the thread with a 360° helical motion.

11 After that the tool departs the contour tangentially and returns to the starting point in the working plane.

12 At the end of the cycle, the TNC retracts the tool in rapid traverse to setup clearance or, if programmed, to the 2nd setup clearance.

Please note while programming:

Program a positioning block for the starting point (hole center) in the working plane with radius compensation **R0**.

The algebraic sign of the cycle parameters depth of thread, countersinking depth or sinking depth at front determines the working direction. The working direction is defined in the following sequence:
1. Thread depth
2. Countersinking depth
3. Depth at front

If you program a depth parameter to be 0, the TNC does not execute that step.

Program the thread depth as a value smaller than the total hole depth by at least one-third the thread pitch.

Danger of collision!

Use the machine parameter displayDepthErr to define whether, if a positive depth is entered, the TNC should output an error message (on) or not (off).

Keep in mind that the TNC reverses the calculation for pre-positioning when a **positive depth is entered**. This means that the tool moves at rapid traverse in the tool axis to set-up clearance **below** the workpiece surface!

Cycle parameters

- **Nominal diameter** Q335: Nominal thread diameter. Input range 0 to 99999.9999
- **Thread pitch** Q239: Pitch of the thread. The algebraic sign differentiates between right-hand and left-hand threads:
  + = right-hand thread
  –= left-hand thread Input range -99.9999 to 99.9999
- **Thread depth** Q201 (incremental): Distance between workpiece surface and root of thread. Input range -99999.9999 to 99999.9999
- **Total hole depth** Q356 (incremental): Distance between workpiece surface and bottom of hole. Input range -99999.9999 to 99999.9999
- **Feed rate for pre-positioning** Q253: Traversing speed of the tool when moving in and out of the workpiece, in mm/min. Input range 0 to 99999.9999 alternatively **FMAX**, **FAUTO**
- **Climb or up-cut** Q351: Type of milling operation with M3
  +1 = climb
  –1 = up-cut

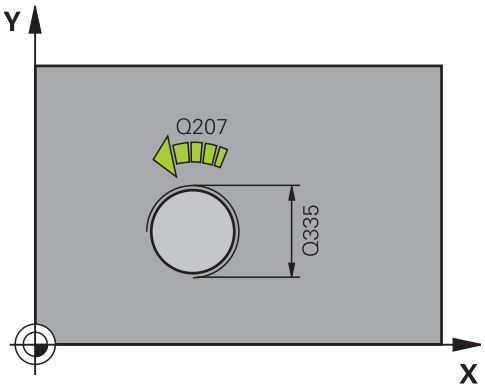

- **Plunging depth** Q202 (incremental): Infeed per cut. The depth does not have to be a multiple of the plunging depth. Input range 0 to 99999.9999

  The TNC will go to depth in one movement if:
  - the plunging depth is equal to the depth
  - the plunging depth is greater than the depth
- **Upper advanced stop distance** Q258 (incremental): Set-up clearance for rapid traverse positioning when the TNC moves the tool again to the current plunging depth after retraction from the hole. Input range 0 to 99999.9999
- **Infeed depth for chip breaking** Q257 (incremental): Depth at which the TNC carries out chip breaking. No chip breaking if 0 is entered. Input range 0 to 99999.9999
- **Retraction rate for chip breaking** Q256 (incremental): Value by which the TNC retracts the tool during chip breaking. Input range 0.1000 to 99999.9999
- **Depth at front** Q358 (incremental): Distance between tool tip and the top surface of the workpiece for countersinking at front. Input range -99999.9999 to 99999.9999
- **Countersinking offset at front** Q359 (incremental): Distance by which the TNC moves the tool center away from the hole center. Input range 0 to 99999.9999
- **Set-up clearance** Q200 (incremental): Distance between tool tip and workpiece surface. Input range 0 to 99999.9999
- **Coordinate of workpiece surface** Q203 (absolute): Coordinate of the workpiece surface. Input range -99999.9999 to 99999.9999
- **2nd set-up clearance** Q204 (incremental): Coordinate in the spindle axis at which no collision between tool and workpiece (fixtures) can occur. Input range 0 to 99999.9999
- **Feed rate for plunging** Q206: Traversing speed of the tool when moving into the workpiece in mm/min. Input range 0 to 99999.999 alternatively **FAUTO**, **FU**
- **Feed rate for milling** Q207: Traversing speed of the tool in mm/min while milling. Input range 0 to 99999.999 alternatively **FAUTO**

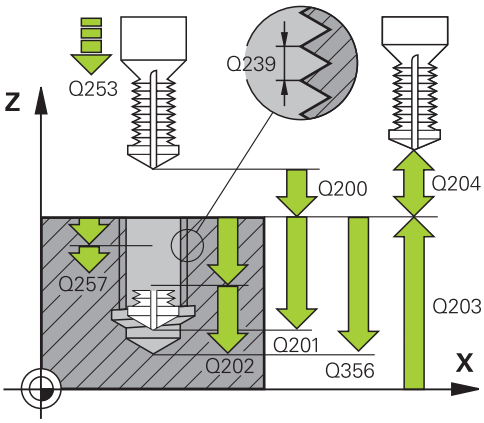

NC blocks

25 CYCL DEF 264 THREAD DRILLNG/ MLLNG	
Q335=10	;NOMINAL DIAMETER
Q239=+1.5	;THREAD PITCH
Q201=-16	;THREAD DEPTH
Q356=-20	;TOTAL HOLE DEPTH
Q253=750	;F PRE-POSITIONING
Q351=+1	;CLIMB OR UP-CUT
Q202=5	;PLUNGING DEPTH
Q258=0.2	;ADV. STOP DIST.
Q257=5	;DEPTH FOR CHIP BRKNG
Q256=0.2	;DIST. FOR CHIP BRKNG
Q358=+0	;DEPTH AT FRONT
Q359=+0	;OFFSET AT FRONT
Q200=2	;SET-UP CLEARANCE
Q203=+30	;SURFACE COORDINATE
Q204=50	;2ND SET-UP CLEARANCE
Q206=150	;FEED RATE FOR PLNGNG
Q207=500	;FEED RATE FOR MILLING

4.9 HELICAL THREAD DRILLING/MILLING (Cycle 265, DIN/ISO: G265)

Cycle run

1 The TNC positions the tool in the tool axis at rapid traverse **FMAX** to the entered set-up clearance above the workpiece surface.

Countersinking at front

2 If countersinking occurs before thread milling, the tool moves at the feed rate for countersinking to the sinking depth at front. If countersinking occurs after thread milling, the TNC moves the tool to the countersinking depth at the feed rate for pre-positioning.

3 The TNC positions the tool without compensation from the center on a semicircle to the offset at front, and then follows a circular path at the feed rate for countersinking.

4 The tool then moves in a semicircle to the hole center.

Thread milling

5 The tool moves at the programmed feed rate for pre-positioning to the starting plane for the thread.

6 The tool then approaches the thread diameter tangentially in a helical movement.

7 The tool moves on a continuous helical downward path until it reaches the thread depth.

8 After that the tool departs the contour tangentially and returns to the starting point in the working plane.

9 At the end of the cycle, the TNC retracts the tool in rapid traverse to setup clearance or, if programmed, to the 2nd setup clearance.

Please note while programming:

Program a positioning block for the starting point (hole center) in the working plane with radius compensation **R0**.

The algebraic sign of the cycle parameters depth of thread or sinking depth at front determines the working direction. The working direction is defined in the following sequence:
1. Thread depth
2. Depth at front

If you program a depth parameter to be 0, the TNC does not execute that step.

If you change the thread depth, the TNC automatically changes the starting point for the helical movement.

The type of milling (up-cut/climb) is determined by the thread (right-hand/left-hand) and the direction of tool rotation, since it is only possible to work in the direction of the tool.

Danger of collision!

Use the machine parameter displayDepthErr to define whether, if a positive depth is entered, the TNC should output an error message (on) or not (off).

Keep in mind that the TNC reverses the calculation for pre-positioning when a **positive depth is entered**. This means that the tool moves at rapid traverse in the tool axis to set-up clearance **below** the workpiece surface!

Cycle parameters

- **Nominal diameter** Q335: Nominal thread diameter. Input range 0 to 99999.9999
- **Thread pitch** Q239: Pitch of the thread. The algebraic sign differentiates between right-hand and left-hand threads:
  + = right-hand thread
  –= left-hand thread Input range -99.9999 to 99.9999
- **Thread depth** Q201 (incremental): Distance between workpiece surface and root of thread. Input range -99999.9999 to 99999.9999
- **Feed rate for pre-positioning** Q253: Traversing speed of the tool when moving in and out of the workpiece, in mm/min. Input range 0 to 99999.9999 alternatively **FMAX**, **FAUTO**
- **Depth at front** Q358 (incremental): Distance between tool tip and the top surface of the workpiece for countersinking at front. Input range -99999.9999 to 99999.9999
- **Countersinking offset at front** Q359 (incremental): Distance by which the TNC moves the tool center away from the hole center. Input range 0 to 99999.9999
- **Countersinking** Q360: Running the chamfer
  0 = before thread milling
  1 = after thread milling
- **Set-up clearance** Q200 (incremental): Distance between tool tip and workpiece surface. Input range 0 to 99999.9999
- **Coordinate of workpiece surface** Q203 (absolute): Coordinate of the workpiece surface. Input range -99999.9999 to 99999.9999
- **2nd set-up clearance** Q204 (incremental): Coordinate in the spindle axis at which no collision between tool and workpiece (fixtures) can occur. Input range 0 to 99999.9999

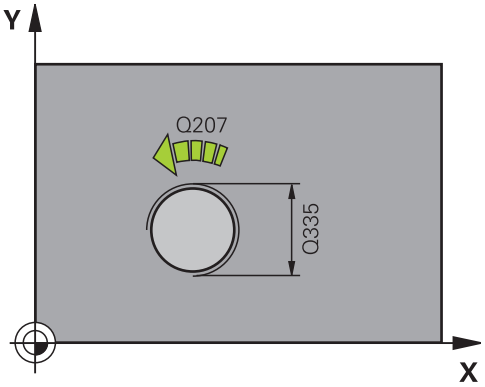

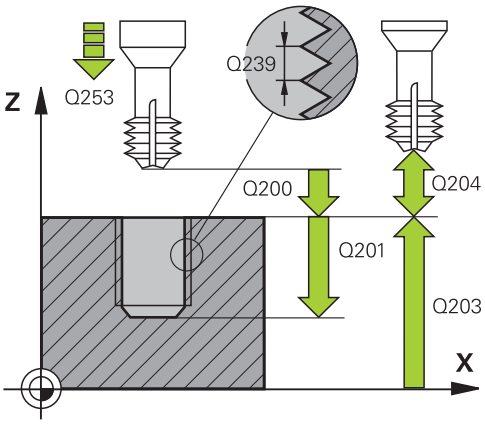

- **Feed rate for countersinking** Q254: Traversing speed of the tool during countersinking in mm/min. Input range 0 to 99999.9999 alternatively **FAUTO**, **FU**
- **Feed rate for milling** Q207: Traversing speed of the tool in mm/min while milling. Input range 0 to 99999.999 alternatively **FAUTO**

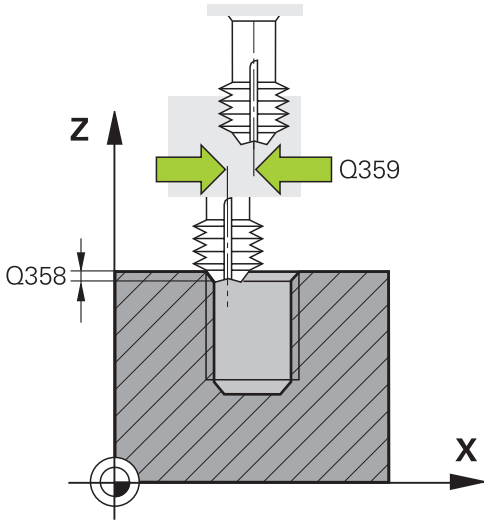

NC blocks

25 CYCL DEF 265 HEL. THREAD DRLG/MLG	
Q335=10	;NOMINAL DIAMETER
Q239=+1.5	;THREAD PITCH
Q201=-16	;THREAD DEPTH
Q253=750	;F PRE-POSITIONING
Q358=+0	;DEPTH AT FRONT
Q359=+0	;OFFSET AT FRONT
Q360=0	;COUNTERSINKING
Q200=2	;SET-UP CLEARANCE
Q203=+30	;SURFACE COORDINATE
Q204=50	;2ND SET-UP CLEARANCE
Q254=150	;F COUNTERBORING
Q207=500	;FEED RATE FOR MILLING

4.10 OUTSIDE THREAD MILLING (Cycle 267, DIN/ISO: G267)

Cycle run

1 The TNC positions the tool in the tool axis at rapid traverse **FMAX** to the entered set-up clearance above the workpiece surface.

Countersinking at front

2 The TNC moves on the reference axis of the working plane from the center of the stud to the starting point for countersinking at front. The position of the starting point is determined by the thread radius, tool radius and pitch.

3 The tool moves at the feed rate for pre-positioning to the sinking depth at front.

4 The TNC positions the tool without compensation from the center on a semicircle to the offset at front, and then follows a circular path at the feed rate for countersinking.

5 The tool then moves in a semicircle to the starting point.

Thread milling

6 The TNC positions the tool to the starting point if there has been no previous countersinking at front. Starting point for thread milling = starting point for countersinking at front.

7 The tool moves at the programmed feed rate for pre-positioning to the starting plane. The starting plane is derived from the algebraic sign of the thread pitch, the milling method (climb or up-cut milling) and the number of threads per step.

8 The tool then approaches the thread diameter tangentially in a helical movement.

9 Depending on the setting of the parameter for the number of threads, the tool mills the thread in one helical movement, in several offset helical movements or in one continuous helical movement.

10 After that the tool departs the contour tangentially and returns to the starting point in the working plane.

11 At the end of the cycle, the TNC retracts the tool in rapid traverse to setup clearance or, if programmed, to the 2nd setup clearance.

Please note while programming:

Program a positioning block for the starting point (stud center) in the working plane with radius compensation **R0**.

The offset required before countersinking at the front should be determined ahead of time. You must enter the value from the center of the stud to the center of the tool (uncorrected value).

The algebraic sign of the cycle parameters depth of thread or sinking depth at front determines the working direction. The working direction is defined in the following sequence:
1. Thread depth
2. Depth at front

If you program a depth parameter to be 0, the TNC does not execute that step.

The algebraic sign for the cycle parameter "thread depth" determines the working direction.

Danger of collision!

Use the machine parameter displayDepthErr to define whether, if a positive depth is entered, the TNC should output an error message (on) or not (off).

Keep in mind that the TNC reverses the calculation for pre-positioning when a **positive depth is entered**. This means that the tool moves at rapid traverse in the tool axis to set-up clearance **below** the workpiece surface!

Cycle parameters

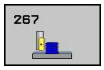

- **Nominal diameter** Q335: Nominal thread diameter. Input range 0 to 99999.9999
- **Thread pitch** Q239: Pitch of the thread. The algebraic sign differentiates between right-hand and left-hand threads:
  + = right-hand thread
  –= left-hand thread Input range -99.9999 to 99.9999
- **Thread depth** Q201 (incremental): Distance between workpiece surface and root of thread. Input range -99999.9999 to 99999.9999
- **Threads per step** Q355: Number of thread starts by which the tool is displaced:
  0 = one helix on the thread depth
  1 = continuous helix on the complete thread length
  >1 = several helix paths with approach and departure, between these the TNC sets the tool by Q355 x pitch. Input range 0 to 99999

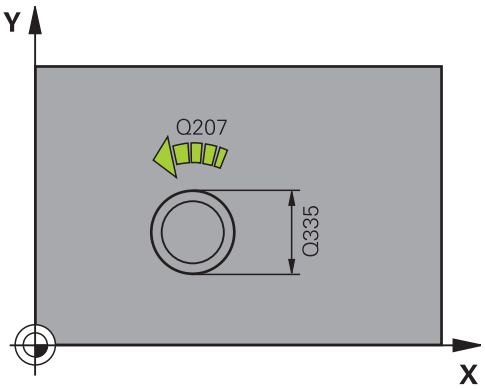

- **Feed rate for pre-positioning** Q253: Traversing speed of the tool when moving in and out of the workpiece, in mm/min. Input range 0 to 99999.9999 alternatively **FMAX**, **FAUTO**
- **Climb or up-cut** Q351: Type of milling operation with M3
  +1 = climb
  –1 = up-cut
- **Set-up clearance** Q200 (incremental): Distance between tool tip and workpiece surface. Input range 0 to 99999.9999
- **Depth at front** Q358 (incremental): Distance between tool tip and the top surface of the workpiece for countersinking at front. Input range -99999.9999 to 99999.9999
- **Countersinking offset at front** Q359 (incremental): Distance by which the TNC moves the tool center away from the hole center. Input range 0 to 99999.9999
- **Coordinate of workpiece surface** Q203 (absolute): Coordinate of the workpiece surface. Input range -99999.9999 to 99999.9999
- **2nd set-up clearance** Q204 (incremental): Coordinate in the spindle axis at which no collision between tool and workpiece (fixtures) can occur. Input range 0 to 99999.9999
- **Feed rate for countersinking** Q254: Traversing speed of the tool during countersinking in mm/min. Input range 0 to 99999.9999 alternatively **FAUTO**, **FU**
- **Feed rate for milling** Q207: Traversing speed of the tool in mm/min while milling. Input range 0 to 99999.999 alternatively **FAUTO**

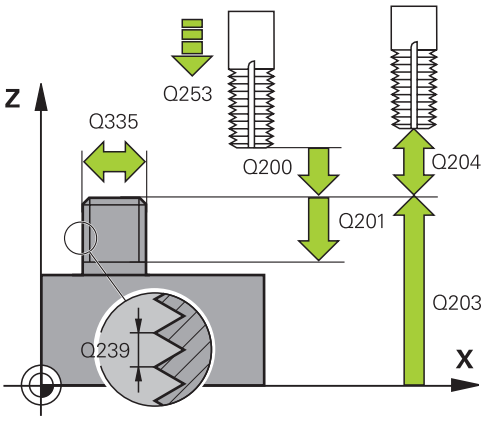

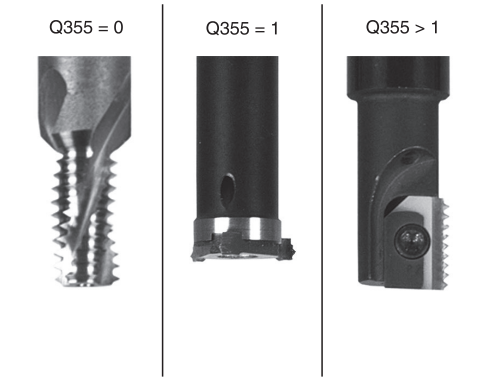

NC blocks

25 CYCL DEF 267 OUTSIDE THREAD MLLNG	
Q335=10	;NOMINAL DIAMETER
Q239=+1.5	;THREAD PITCH
Q201=-20	;THREAD DEPTH
Q355=0	;THREADS PER STEP
Q253=750	;F PRE-POSITIONING
Q351=+1	;CLIMB OR UP-CUT
Q200=2	;SET-UP CLEARANCE
Q358=+0	;DEPTH AT FRONT
Q359=+0	;OFFSET AT FRONT
Q203=+30	;SURFACE COORDINATE
Q204=50	;2ND SET-UP CLEARANCE
Q254=150	;F COUNTERBORING
Q207=500	;FEED RATE FOR MILLING

4.11 Programming Examples

Example: Thread milling

The drill hole coordinates are stored in the point table TAB1.PNT and are called by the TNC with **CYCL CALL PAT**.

The tool radii are selected so that all work steps can be seen in the test graphics.

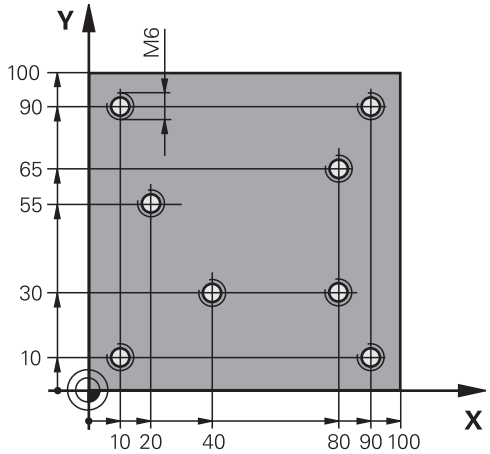

Program sequence

- Centering
- Drilling
- Tapping

0 BEGIN PGM 1 MM		
1 BLK FORM 0.1 Z X+0 Y+0 Z-20		Definition of workpiece blank
2 BLK FORM 0.2 X+100 Y+100 Y+0		
3 TOOL CALL 1 Z S5000		Call tool: centering drill
4 L Z+10 R0 F5000		Move tool to clearance height (enter a value for F): the TNC positions to the clearance height after every cycle
5 SEL PATTERN "TAB1"		Definition of point table
6 CYCL DEF 200 DRILLING		Cycle definition: CENTERING
Q200=2	;SET-UP CLEARANCE	
Q201=-2	;DEPTH	
Q206=150	;FEED RATE FOR PLNGNG	
Q202=2	;PLUNGING DEPTH	
Q210=0	;DWELL TIME AT TOP	
Q203=+0	;SURFACE COORDINATE	0 must be entered here, effective as defined in point table
Q204=0	;2ND SET-UP CLEARANCE	0 must be entered here, effective as defined in point table
Q211=0.2	;DWELL TIME AT BOTTOM	
10 CYCL CALL PAT F5000 M3		Cycle call in connection with point table TAB1.PNT, feed rate between the points: 5000 mm/min
11 L Z+100 R0 FMAX M6		Retract the tool, change the tool
12 TOOL CALL 2 Z S5000		Call tool: drill
13 L Z+10 R0 F5000		Move tool to clearance height (enter a value for F)
14 CYCL DEF 200 DRILLING		Cycle definition: drilling
Q200=2	;SET-UP CLEARANCE	
Q201=-25	;DEPTH	
Q206=150	;FEED RATE FOR PLNGNG	
Q202=5	;PLUNGING DEPTH	
Q211=0	;DWELL TIME AT TOP	
Q203=+0	;SURFACE COORDINATE	0 must be entered here, effective as defined in point table

Q204=0 ;2ND SET-UP CLEARANCE	0 must be entered here, effective as defined in point table
Q211=0.2 ;DWELL TIME AT BOTTOM	
15 CYCL CALL PAT F5000 M3	Cycle call in connection with point table TAB1.PNT
16 L Z+100 R0 FMAX M6	Retract the tool, change the tool
17 TOOL CALL 3 Z S200	Call tool: tap
18 L Z+50 R0 FMAX	Move tool to clearance height
19 CYCL DEF 206 TAPPING NEW	Cycle definition for tapping
Q200=2 ;SET-UP CLEARANCE	
Q201=-25 ;THREAD DEPTH	
Q206=150 ;FEED RATE FOR PLNGNG	
Q211=0 ;DWELL TIME AT BOTTOM	
Q203=+0 ;SURFACE COORDINATE	0 must be entered here, effective as defined in point table
Q204=0 ;2ND SET-UP CLEARANCE	0 must be entered here, effective as defined in point table
20 CYCL CALL PAT F5000 M3	Cycle call in connection with point table TAB1.PNT
21 L Z+100 R0 FMAX M2	Retract in the tool axis, end program
22 END PGM 1 MM	

```
TAB1. PNT MM
NR X Y Z
0 +10 +10 +0
1 +40 +30 +0
2 +90 +10 +0
3 +80 +30 +0
4 +80 +65 +0
5 +90 +90 +0
6 +10 +90 +0
7 +20 +55 +0
[END]
```

5

Fixed Cycles: Pocket Milling / Stud Milling / Slot Milling

5.1 Fundamentals

Overview

The TNC offers 6 cycles for machining pockets, studs and slots:

Cycle	Soft key	Page
251 RECTANGULAR POCKET Roughing/finishing cycle with selection of machining operation and helical plunging		119
252 CIRCULAR POCKET Roughing/finishing cycle with selection of machining operation and helical plunging	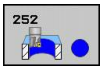	123
253 SLOT MILLING Roughing/finishing cycle with selection of machining operation and reciprocal plunging	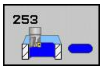	127
254 CIRCULAR SLOT Roughing/finishing cycle with selection of machining operation and reciprocal plunging		131
256 RECTANGULAR STUD Roughing/finishing cycle with stepover, if multiple passes are required		136
257 CIRCULAR STUD Roughing/finishing cycle with stepover, if multiple passes are required		140

5.2 RECTANGULAR POCKET (Cycle 251, DIN/ISO: G251)

Cycle run

Use Cycle 251 RECTANGULAR POCKET to completely machine rectangular pockets. Depending on the cycle parameters, the following machining alternatives are available:

- Complete machining: Roughing, floor finishing, side finishing
- Only roughing
- Only floor finishing and side finishing
- Only floor finishing
- Only side finishing

Roughing

1 The tool plunges the workpiece at the pocket center and advances to the first plunging depth. Specify the plunging strategy with parameter Q366.
2 The TNC roughs out the pocket from the inside out, taking the overlap factor (Parameter Q370) and the finishing allowance (Parameters Q368 and Q369) into account.
3 At the end of the roughing operation, the TNC moves the tool tangentially away from the pocket wall, then moves by the set-up clearance above the current pecking depth and returns from there at rapid traverse to the pocket center.
4 This process is repeated until the programmed pocket depth is reached.

Finishing

5 Inasmuch as finishing allowances are defined, the TNC then finishes the pocket walls, in multiple infeeds if so specified. The pocket wall is approached tangentially.
6 Then the TNC finishes the floor of the pocket from the inside out. The pocket floor is approached tangentially.

Please note while programming:

With an inactive tool table you must always plunge vertically (Q366=0) because you cannot define a plunging angle.

Pre-position the tool in the machining plane to the starting position with radius compensation **R0**. Note parameter Q367 (position).

The TNC automatically pre-positions the tool in the tool axis. Note parameter Q204 (2nd set-up clearance).

The algebraic sign for the cycle parameter DEPTH determines the working direction. If you program DEPTH=0, the cycle will not be executed.

At the end of the cycle, the TNC returns the tool to the starting position.

At the end of a roughing operation, the TNC positions the tool back to the pocket center at rapid traverse. The tool is above the current pecking depth by the set-up clearance. Enter the set-up clearance so that the tool cannot jam because of chips.

The TNC outputs an error message during helical plunging if the internally calculated diameter of the helix is smaller than twice the tool diameter. If you are using a center-cut tool, you can switch off this monitoring function via the **suppressPlungeErr** machine parameter.

The TNC reduces the infeed depth to the LCUTS tool length defined in the tool table if the tool length is shorter than the Q202 infeed depth programmed in the cycle.

Danger of collision!

Use the machine parameter displayDepthErr to define whether, if a positive depth is entered, the TNC should output an error message (on) or not (off).

Keep in mind that the TNC reverses the calculation for pre-positioning when a **positive depth is entered**. This means that the tool moves at rapid traverse in the tool axis to set-up clearance **below** the workpiece surface!

If you call the cycle with machining operation 2 (only finishing), then the TNC positions the tool in the center of the pocket at rapid traverse to the first plunging depth.

Cycle parameters

- **Machining operation (0/1/2)** Q215: Define machining operation:
  0: Roughing and finishing
  1: Only roughing
  2: Only finishing
  Side finishing and floor finishing are only machined when the specific allowance (Q368, Q369) is defined
- **1st side length** Q218 (incremental): Pocket length, parallel to the reference axis of the working plane. Input range 0 to 99999.9999
- **2nd side length** Q219 (incremental): Pocket length, parallel to the minor axis of the working plane. Input range 0 to 99999.9999
- **Corner radius** Q220: Radius of the pocket corner. If you have entered 0 here, the TNC assumes that the corner radius is equal to the tool radius. Input range 0 to 99999.9999
- **Finishing allowance for side** Q368 (incremental): Finishing allowance in the working plane. Input range 0 to 99999.9999
- **Angle of rotation** Q224 (absolute): Angle by which the entire machining is rotated. The center of rotation is the position at which the tool is located when the cycle is called. Input range -360.0000 to 360.0000
- **Pocket position** Q367: Position of the pocket in reference to the position of the tool when the cycle is called:
  0: Tool position = pocket center
  1: Tool position = left corner below
  2: Tool position = right corner below
  3: Tool position = right corner top
  4: Tool position = left top corner top
- **Feed rate for milling** Q207: Traversing speed of the tool in mm/min while milling. Input range 0 to 99999.999 alternatively **FAUTO**, **FU**, **FZ**
- **Climb or up-cut** Q351: Type of milling operation with M3
  +1 = climb
  -1 = up-cut
  PREDEF: The TNC uses the value from the GLOBAL DEF block
- **Depth** Q201 (incremental): Distance between workpiece surface and bottom of pocket. Input range -99999.9999 to 99999.9999
- **Plunging depth** Q202 (incremental): Infeed per cut. Enter a value greater than 0. Input range 0 to 99999.9999

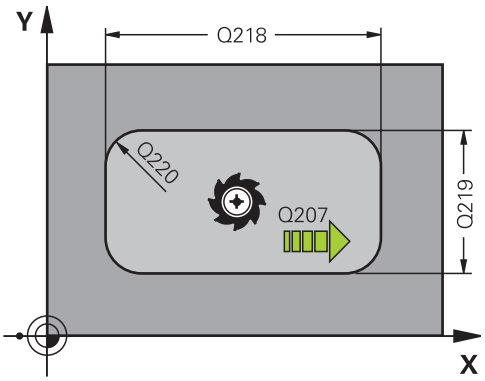

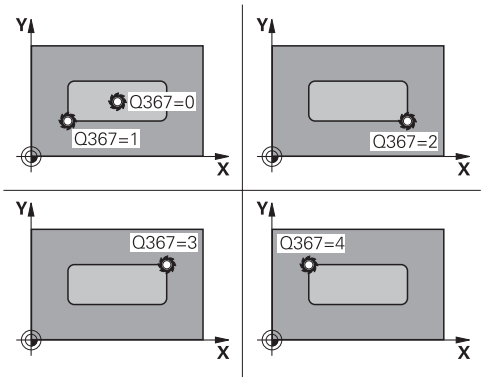

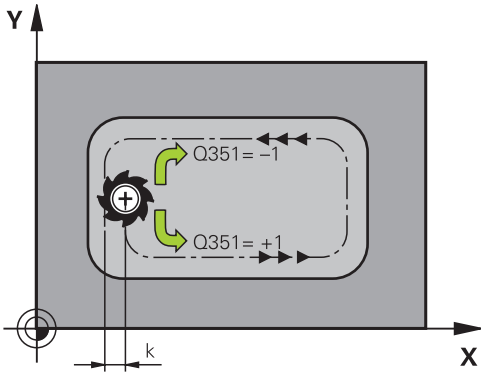

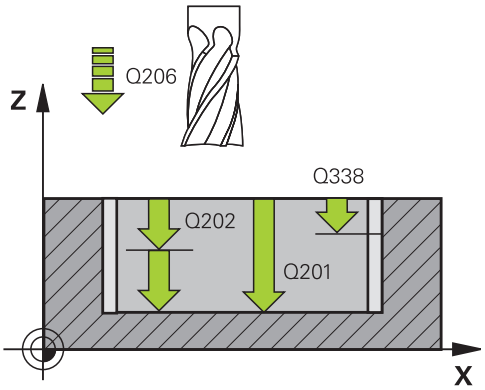

- **Finishing allowance for floor** Q369 (incremental value): Finishing allowance in the tool axis. Input range 0 to 99999.9999
- **Feed rate for plunging** Q206: Traversing speed of the tool while moving to depth in mm/min. Input range 0 to 99999.999; alternatively **FAUTO**, **FU**, **FZ**
- **Infeed for finishing** Q338 (incremental): Infeed per cut. Q338=0: Finishing in one infeed. Input range 0 to 99999.9999
- **Set-up clearance** Q200 (incremental): Distance between tool tip and workpiece surface. Input range 0 to 99999.9999, alternatively **PREDEF**
- **Coordinate of workpiece surface** Q203 (absolute): Coordinate of the workpiece surface. Input range -99999.9999 to 99999.9999
- **2nd set-up clearance** Q204 (incremental): Coordinate in the spindle axis at which no collision between tool and workpiece (fixtures) can occur. Input range 0 to 99999.9999, alternatively **PREDEF**
- **Path overlap factor** Q370: Q370 x tool radius = stepover factor k. Input range: 0.1 to 1.9999 alternatively **PREDEF**.
- **Plunging strategy** Q366: Type of plunging strategy:
  0: vertical plunging. The TNC plunges perpendicularly, regardless of the plunging angle **ANGLE** defined in the tool table
  1: helical plunging. In the tool table, the plunging angle **ANGLE** for the active tool must be defined as not equal to 0. Otherwise, the TNC generates an error message
  2: reciprocal plunging. In the tool table, the plunging angle **ANGLE** for the active tool must be defined as not equal to 0. Otherwise, the TNC generates an error message. The reciprocation length depends on the plunging angle. As a minimum value the TNC uses twice the tool diameter
  PREDEF: The TNC uses the value from the GLOBAL DEF block
- **Feed rate for finishing** Q385: Traversing speed of the tool during side and floor finishing in mm/min. Input range 0 to 99999.999; alternatively **FAUTO**, **FU**, **FZ**

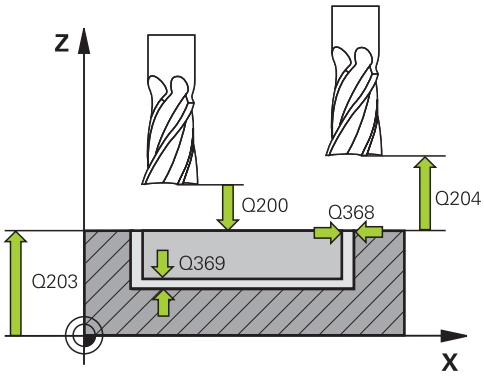

NC blocks

8 CYCL DEF 251 RECTANGULAR POCKET	
Q215=0	;MACHINING OPERATION
Q218=80	;FIRST SIDE LENGTH
Q219=60	;2ND SIDE LENGTH
Q220=5	;CORNER RADIUS
Q368=0.2	;ALLOWANCE FOR SIDE
Q224=+0	;ANGLE OF ROTATION
Q367=0	;POCKET POSITION
Q207=500	;FEED RATE FOR MILLING
Q351=+1	;CLIMB OR UP-CUT
Q201=-20	;DEPTH
Q202=5	;PLUNGING DEPTH
Q369=0.1	;ALLOWANCE FOR FLOOR
Q206=150	;FEED RATE FOR PLNGNG
Q338=5	;INFEED FOR FINISHING
Q200=2	;SET-UP CLEARANCE
Q203=+0	;SURFACE COORDINATE
Q204=50	;2ND SET-UP CLEARANCE
Q370=1	;TOOL PATH OVERLAP
Q366=1	;PLUNGE
Q385=500	;FINISHING FEED RATE
9 L X+50 Y+50 R0 FMAX M3 M99	

5.3 CIRCULAR POCKET (Cycle 252, DIN/ ISO: G252)

Cycle run

Use Cycle 252 CIRCULAR POCKET to completely machine circular pockets. Depending on the cycle parameters, the following machining alternatives are available:

- Complete machining: Roughing, floor finishing, side finishing
- Only roughing
- Only floor finishing and side finishing
- Only floor finishing
- Only side finishing

Roughing

1 The tool plunges the workpiece at the pocket center and advances to the first plunging depth. Specify the plunging strategy with parameter Q366.
2 The TNC roughs out the pocket from the inside out, taking the overlap factor (Parameter Q370) and the finishing allowance (Parameters Q368 and Q369) into account.
3 At the end of the roughing operation, the TNC moves the tool tangentially away from the pocket wall, then moves by the set-up clearance above the current pecking depth and returns from there at rapid traverse to the pocket center.
4 This process is repeated until the programmed pocket depth is reached.

Finishing

1 Inasmuch as finishing allowances are defined, the TNC then finishes the pocket walls, in multiple infeeds if so specified. The pocket wall is approached tangentially.
2 Then the TNC finishes the floor of the pocket from the inside out. The pocket floor is approached tangentially.

Please note while programming:

With an inactive tool table you must always plunge vertically (Q366=0) because you cannot define a plunging angle.

Pre-position the tool in the machining plane to the starting position (circle center) with radius compensation **R0**.

The TNC automatically pre-positions the tool in the tool axis. Note parameter Q204 (2nd set-up clearance).

The algebraic sign for the cycle parameter DEPTH determines the working direction. If you program DEPTH=0, the cycle will not be executed.

At the end of the cycle, the TNC returns the tool to the starting position.

At the end of a roughing operation, the TNC positions the tool back to the pocket center at rapid traverse. The tool is above the current pecking depth by the set-up clearance. Enter the set-up clearance so that the tool cannot jam because of chips.

The TNC outputs an error message during helical plunging if the internally calculated diameter of the helix is smaller than twice the tool diameter. If you are using a center-cut tool, you can switch off this monitoring function via the **suppressPlungeErr** machine parameter.

The TNC reduces the infeed depth to the LCUTS tool length defined in the tool table if the tool length is shorter than the Q202 infeed depth programmed in the cycle.

Danger of collision!

Use the machine parameter displayDepthErr to define whether, if a positive depth is entered, the TNC should output an error message (on) or not (off).

Keep in mind that the TNC reverses the calculation for pre-positioning when a **positive depth is entered**. This means that the tool moves at rapid traverse in the tool axis to set-up clearance **below** the workpiece surface!

If you call the cycle with machining operation 2 (only finishing), then the TNC positions the tool in the center of the pocket at rapid traverse to the first plunging depth.

Cycle parameters

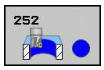

- **Machining operation (0/1/2)** Q215: Define machining operation:
  0: Roughing and finishing
  1: Only roughing
  2: Only finishing
  Side finishing and floor finishing are only machined when the specific allowance (Q368, Q369) is defined
- **Circle diameter** Q223: Diameter of the finished pocket. Input range 0 to 99999.9999
- **Finishing allowance for side** Q368 (incremental): Finishing allowance in the working plane. Input range 0 to 99999.9999
- **Feed rate for milling** Q207: Traversing speed of the tool in mm/min while milling. Input range 0 to 99999.999 alternatively **FAUTO**, **FU**, **FZ**
- **Climb or up-cut** Q351: Type of milling operation with M3
  +1 = climb
  -1 = up-cut
  PREDEF: The TNC uses the value from the GLOBAL DEF block
- **Depth** Q201 (incremental): Distance between workpiece surface and bottom of pocket. Input range -99999.9999 to 99999.9999
- **Plunging depth** Q202 (incremental): Infeed per cut. Enter a value greater than 0. Input range 0 to 99999.9999
- **Finishing allowance for floor** Q369 (incremental value): Finishing allowance in the tool axis. Input range 0 to 99999.9999
- **Feed rate for plunging** Q206: Traversing speed of the tool while moving to depth in mm/min. Input range 0 to 99999.999; alternatively **FAUTO**, **FU**, **FZ**

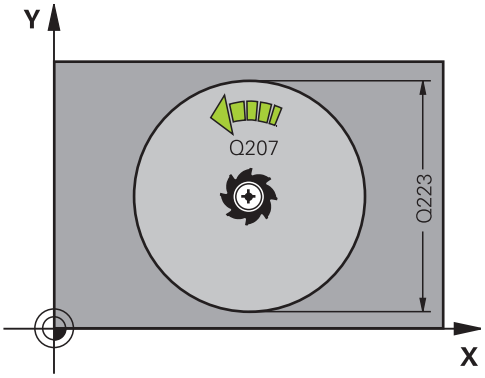

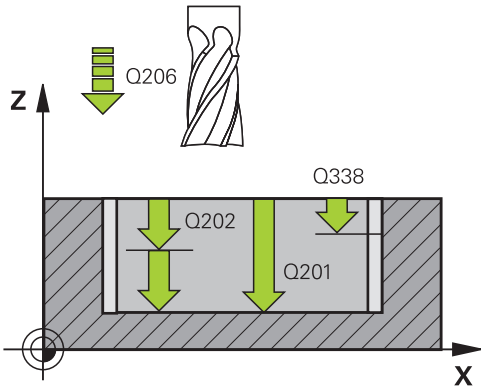

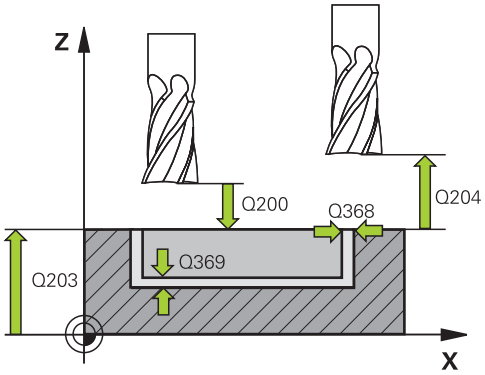

- **Infeed for finishing** Q338 (incremental): Infeed per cut. Q338=0: Finishing in one infeed. Input range 0 to 99999.9999
- **Set-up clearance** Q200 (incremental): Distance between tool tip and workpiece surface. Input range 0 to 99999.9999, alternatively **PREDEF**
- **Coordinate of workpiece surface** Q203 (absolute): Coordinate of the workpiece surface. Input range -99999.9999 to 99999.9999
- **2nd set-up clearance** Q204 (incremental): Coordinate in the spindle axis at which no collision between tool and workpiece (fixtures) can occur. Input range 0 to 99999.9999, alternatively **PREDEF**
- **Path overlap factor** Q370: Q370 x tool radius = stepover factor k. Input range: 0.1 to 1.9999 alternatively **PREDEF**.
- **Plunging strategy** Q366: Type of plunging strategy:
  - 0 = Vertical plunging. In the tool table, the plunging angle **ANGLE** for the active tool must be defined as 0 or 90. The TNC will otherwise display an error message.
  - 1 = helical plunging. In the tool table, the plunging angle **ANGLE** for the active tool must be defined as not equal to 0. The TNC will otherwise display an error message.
  - Alternative: **PREDEF**
- **Feed rate for finishing** Q385: Traversing speed of the tool during side and floor finishing in mm/min. Input range 0 to 99999.999; alternatively **FAUTO**, **FU**, **FZ**

NC blocks

```
8 CYCL DEF 252 CIRCULAR POCKET
    Q215=0      ;MACHINING OPERATION
    Q223=60     ;CIRCLE DIAMETER
    Q368=0.2    ;ALLOWANCE FOR SIDE
    Q207=500    ;FEED RATE FOR MILLING
    Q351=+1     ;CLIMB OR UP-CUT
    Q201=-20    ;DEPTH
    Q202=5      ;PLUNGING DEPTH
    Q369=0.1    ;ALLOWANCE FOR FLOOR
    Q206=150    ;FEED RATE FOR PLNGNG
    Q338=5      ;INFEED FOR FINISHING
    Q200=2      ;SET-UP CLEARANCE
    Q203=+0     ;SURFACE COORDINATE
    Q204=50     ;2ND SET-UP CLEARANCE
    Q370=1      ;TOOL PATH OVERLAP
    Q366=1      ;PLUNGE
    Q385=500    ;FINISHING FEED RATE
9 L X+50 Y+50 R0 FMAX M3 M99
```

5.4 SLOT MILLING (Cycle 253, DIN/ISO: G253)

Cycle run

Use Cycle 253 to completely machine a slot. Depending on the cycle parameters, the following machining alternatives are available:

- Complete machining: Roughing, floor finishing, side finishing
- Only roughing
- Only floor finishing and side finishing
- Only floor finishing
- Only side finishing

Roughing

1 Starting from the left slot arc center, the tool moves in a reciprocating motion at the plunging angle defined in the tool table to the first infeed depth. Specify the plunging strategy with parameter Q366.
2 The TNC roughs out the slot from the inside out, taking the finishing allowances (parameter Q368) into account.
3 This process is repeated until the programmed slot depth is reached.

Finishing

4 Inasmuch as finishing allowances are defined, the TNC then finishes the slot walls, in multiple infeeds if so specified. The slot side is approached tangentially in the left slot arc.
5 Then the TNC finishes the floor of the slot from the inside out.

Please note while programming:

With an inactive tool table you must always plunge vertically (Q366=0) because you cannot define a plunging angle.

Pre-position the tool in the machining plane to the starting position with radius compensation **R0**. Note parameter Q367 (position).

The TNC automatically pre-positions the tool in the tool axis. Note parameter Q204 (2nd set-up clearance).

At the end of the cycle the TNC merely moves the tool in working plane back to the center of the slot; in the other working plane axis the TNC does not do any positioning. If you define a slot position not equal to 0, then the TNC only positions the tool in the tool axis to the 2nd set-up clearance. Prior to a new cycle call, move the tool back to the starting position or program always absolute traverse motions after the cycle call.

The algebraic sign for the cycle parameter DEPTH determines the working direction. If you program DEPTH=0, the cycle will not be executed.

If the slot width is greater than twice the tool diameter, the TNC roughs the slot correspondingly from the inside out. You can therefore mill any slots with small tools, too.

The TNC reduces the infeed depth to the LCUTS tool length defined in the tool table if the tool length is shorter than the Q202 infeed depth programmed in the cycle.

Danger of collision!

Use the machine parameter displayDepthErr to define whether, if a positive depth is entered, the TNC should output an error message (on) or not (off).

Keep in mind that the TNC reverses the calculation for pre-positioning when a **positive depth is entered**. This means that the tool moves at rapid traverse in the tool axis to set-up clearance **below** the workpiece surface!

If you call the cycle with machining operation 2 (only finishing), then the TNC positions the tool to the first plunging depth at rapid traverse!

Cycle parameters

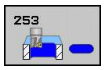

- **Machining operation (0/1/2)** Q215: Define machining operation:
  0: Roughing and finishing
  1: Only roughing
  2: Only finishing
  Side finishing and floor finishing are only machined when the specific allowance (Q368, Q369) is defined
- **Slot length** Q218 (value parallel to the reference axis of the working plane): Enter the length of the slot. Input range 0 to 99999.9999
- **Slot width** Q219 (value parallel to the secondary axis of the working plane): Enter the slot width. If you enter a slot width that equals the tool diameter, the TNC will carry out the roughing process only (slot milling). Maximum slot width for roughing: Twice the tool diameter. Input range 0 to 99999.9999
- **Finishing allowance for side** Q368 (incremental): Finishing allowance in the working plane. Input range 0 to 99999.9999
- **Angle of rotation** Q374 (absolute): Angle by which the entire slot is rotated. The center of rotation is the position at which the tool is located when the cycle is called. Input range -360.000 to 360.000
- **Slot position (0/1/2/3/4)** Q367: Position of the slot in reference to the position of the tool when the cycle is called:
  0: Tool position = slot center
  1: Tool position = left end of slot
  2: Tool position = center of left slot arc
  3: Tool position = center of right slot arc
  4: Tool position = right end of slot
- **Feed rate for milling** Q207: Traversing speed of the tool in mm/min while milling. Input range 0 to 99999.999 alternatively **FAUTO**, **FU**, **FZ**
- **Climb or up-cut** Q351: Type of milling operation with M3
  +1 = climb
  -1 = up-cut
  PREDEF: The TNC uses the value from the GLOBAL DEF block
- **Depth** Q201 (incremental): Distance between workpiece surface and bottom of slot. Input range -99999.9999 to 99999.9999

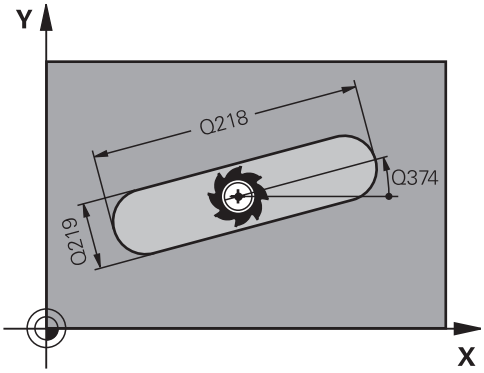

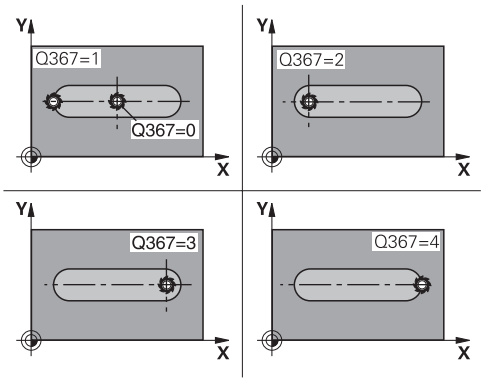

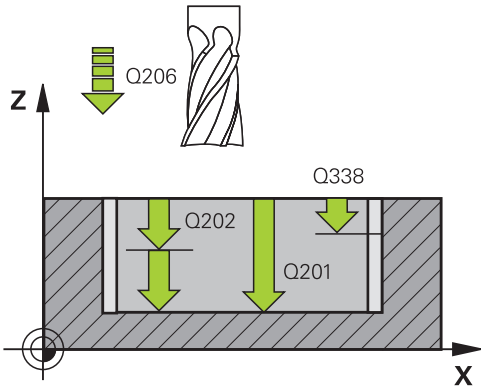

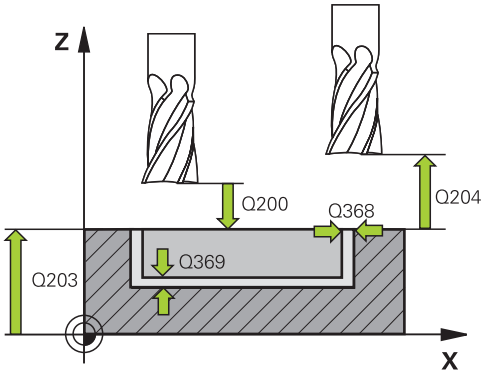

- **Plunging depth** Q202 (incremental): Infeed per cut. Enter a value greater than 0. Input range 0 to 99999.9999
- **Finishing allowance for floor** Q369 (incremental value): Finishing allowance in the tool axis. Input range 0 to 99999.9999
- **Feed rate for plunging** Q206: Traversing speed of the tool while moving to depth in mm/min. Input range 0 to 99999.999; alternatively **FAUTO**, **FU**, **FZ**
- **Infeed for finishing** Q338 (incremental): Infeed per cut. Q338=0: Finishing in one infeed. Input range 0 to 99999.9999
- **Set-up clearance** Q200 (incremental): Distance between tool tip and workpiece surface. Input range 0 to 99999.9999, alternatively **PREDEF**
- **Coordinate of workpiece surface** Q203 (absolute): Coordinate of the workpiece surface. Input range -99999.9999 to 99999.9999
- **2nd set-up clearance** Q204 (incremental): Coordinate in the spindle axis at which no collision between tool and workpiece (fixtures) can occur. Input range 0 to 99999.9999, alternatively **PREDEF**
- **Plunging strategy** Q366: Type of plunging strategy:
  - 0 = Vertical plunging. The plunging angle (ANGLE) in the tool table is not evaluated.
  - 1, 2 = Reciprocating plunge. In the tool table, the plunging angle **ANGLE** for the active tool must be defined as not equal to 0. The TNC will otherwise display an error message.
  - Alternative: **PREDEF**
- **Feed rate for finishing** Q385: Traversing speed of the tool during side and floor finishing in mm/min. Input range 0 to 99999.999; alternatively **FAUTO**, **FU**, **FZ**

NC blocks

```
8 CYCL DEF 253 SLOT MILLING
    Q215=0        ;MACHINING OPERATION
    Q218=80       ;SLOT LENGTH
    Q219=12       ;SLOT WIDTH
    Q368=0.2      ;ALLOWANCE FOR SIDE
    Q374=+0       ;ANGLE OF ROTATION
    Q367=0        ;SLOT POSITION
    Q207=500      ;FEED RATE FOR
                  MILLING
    Q351=+1       ;CLIMB OR UP-CUT
    Q201=-20      ;DEPTH
    Q202=5        ;PLUNGING DEPTH
    Q369=0.1      ;ALLOWANCE FOR
                  FLOOR
    Q206=150      ;FEED RATE FOR
                  PLNGNG
    Q338=5        ;INFEED FOR FINISHING
    Q200=2        ;SET-UP CLEARANCE
    Q203=+0       ;SURFACE COORDINATE
    Q204=50       ;2ND SET-UP
                  CLEARANCE
    Q366=1        ;PLUNGE
    Q385=500      ;FINISHING FEED RATE
9 L X+50 Y+50 R0 FMAX M3 M99
```

5.5 CIRCULAR SLOT (Cycle 254, DIN/ISO: G254)

Cycle run

Use Cycle 254 to completely machine a circular slot. Depending on the cycle parameters, the following machining alternatives are available:

- Complete machining: Roughing, floor finishing, side finishing
- Only roughing
- Only floor finishing and side finishing
- Only floor finishing
- Only side finishing

Roughing

1 The tool moves in a reciprocating motion in the slot center at the plunging angle defined in the tool table to the first infeed depth. Specify the plunging strategy with parameter Q366.
2 The TNC roughs out the slot from the inside out, taking the finishing allowances (parameter Q368) into account.
3 This process is repeated until the programmed slot depth is reached.

Finishing

4 Inasmuch as finishing allowances are defined, the TNC then finishes the slot walls, in multiple infeeds if so specified. The slot side is approached tangentially.
5 Then the TNC finishes the floor of the slot from the inside out.

Please note while programming:

With an inactive tool table you must always plunge vertically (Q366=0) because you cannot define a plunging angle.

Pre-position the tool in the machining plane to the starting position with radius compensation **R0**. Note parameter Q367 (position).

The TNC automatically pre-positions the tool in the tool axis. Note parameter Q204 (2nd set-up clearance).

At the end of the cycle the TNC returns the tool to the starting point (center of the pitch circle) in the working plane. Exception: if you define a slot position not equal to 0, then the TNC only positions the tool in the tool axis to the 2nd set-up clearance. In these cases, always program absolute traverse movements after the cycle call.

The algebraic sign for the cycle parameter DEPTH determines the working direction. If you program DEPTH=0, the cycle will not be executed.

If the slot width is greater than twice the tool diameter, the TNC roughs the slot correspondingly from the inside out. You can therefore mill any slots with small tools, too.

The slot position 0 is not allowed if you use Cycle 254 Circular Slot in combination with Cycle 221.

The TNC reduces the infeed depth to the LCUTS tool length defined in the tool table if the tool length is shorter than the Q202 infeed depth programmed in the cycle.

Danger of collision!

Use the machine parameter displayDepthErr to define whether, if a positive depth is entered, the TNC should output an error message (on) or not (off).

Keep in mind that the TNC reverses the calculation for pre-positioning when a **positive depth is entered**. This means that the tool moves at rapid traverse in the tool axis to set-up clearance **below** the workpiece surface!

If you call the cycle with machining operation 2 (only finishing), then the TNC positions the tool to the first plunging depth at rapid traverse!

Cycle parameters

- **Machining operation (0/1/2)** Q215: Define machining operation:
  0: Roughing and finishing
  1: Only roughing
  2: Only finishing
  Side finishing and floor finishing are only machined when the specific allowance (Q368, Q369) is defined
- **Slot width** Q219 (value parallel to the secondary axis of the working plane): Enter the slot width. If you enter a slot width that equals the tool diameter, the TNC will carry out the roughing process only (slot milling). Maximum slot width for roughing: Twice the tool diameter. Input range 0 to 99999.9999
- **Finishing allowance for side** Q368 (incremental): Finishing allowance in the working plane. Input range 0 to 99999.9999
- **Pitch circle diameter** Q375: Enter the diameter of the pitch circle. Input range 0 to 99999.9999
- **Reference for slot position (0/1/2/3)** Q367: Position of the slot in reference to the position of the tool when the cycle is called:
  0: Tool position is not taken into account. The slot position is determined from the entered pitch circle center and the starting angle
  1: Tool position = center of left slot arc. Starting angle Q376 refers to this position. The entered pitch circle center is not taken into account
  2: Tool position = center of centerline. Starting angle Q376 refers to this position. The entered pitch circle center is not taken into account
  3: Tool position = center of right slot arc. Starting angle Q376 refers to this position. The entered pitch circle center is not taken into account.
- **Center in 1st axis** Q216 (absolute): Center of the pitch circle in the reference axis of the working plane. **Only effective if Q367 = 0**. Input range -99999.9999 to 99999.9999
- **Center in 2nd axis** Q217 (absolute): Center of the pitch circle in the minor axis of the working plane. **Only effective if Q367 = 0**. Input range -99999.9999 to 99999.9999
- **Starting angle** Q376 (absolute): Enter the polar angle of the starting point. Input range -360.000 to 360.000
- **Angular length** Q248 (incremental): Enter the angular length of the slot. Input range 0 to 360.000

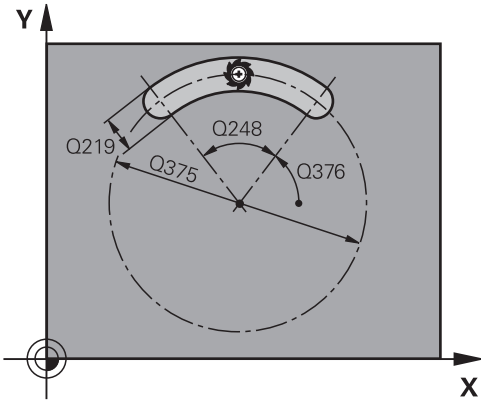

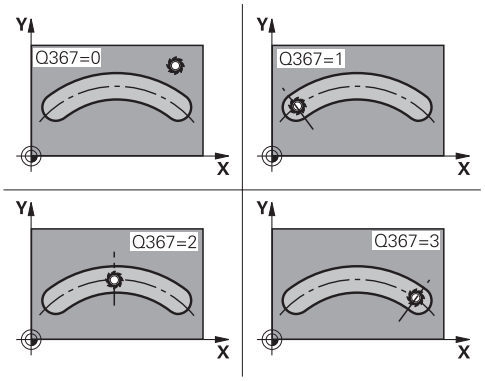

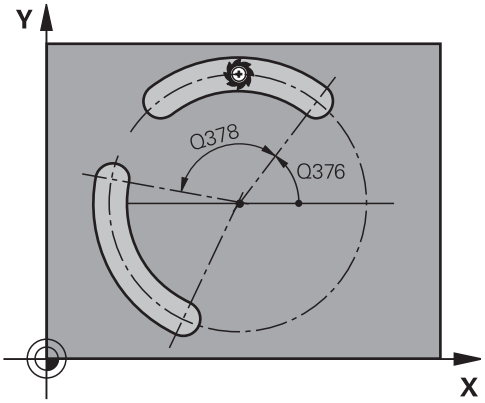

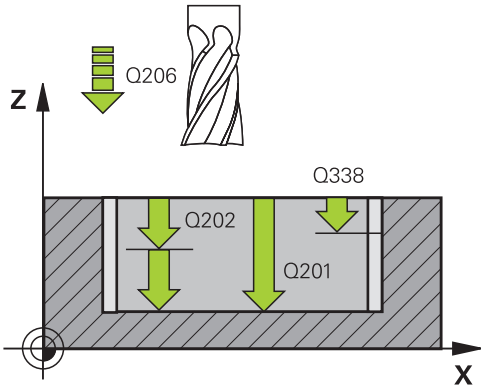

- **Stepping angle** Q378 (incremental): Angle by which the entire slot is rotated. The center of rotation is at the center of the pitch circle. Input range -360.000 to 360.000
- **Number of repetitions** Q377: Number of machining operations on a pitch circle. Input range 1 to 99999
- **Feed rate for milling** Q207: Traversing speed of the tool in mm/min while milling. Input range 0 to 99999.999 alternatively **FAUTO**, **FU**, **FZ**

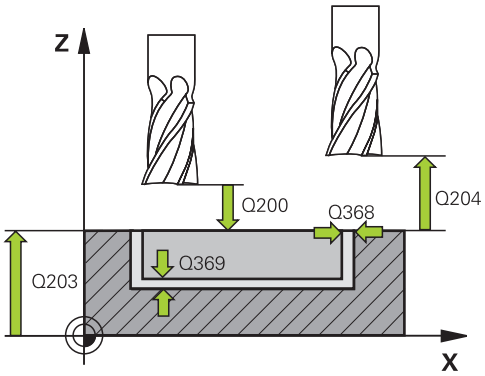

- **Climb or up-cut** Q351: Type of milling operation with M3
  +1 = climb
  -1 = up-cut
  PREDEF: The TNC uses the value from the GLOBAL DEF block
- **Depth** Q201 (incremental): Distance between workpiece surface and bottom of slot. Input range -99999.9999 to 99999.9999
- **Plunging depth** Q202 (incremental): Infeed per cut. Enter a value greater than 0. Input range 0 to 99999.9999
- **Finishing allowance for floor** Q369 (incremental value): Finishing allowance in the tool axis. Input range 0 to 99999.9999
- **Feed rate for plunging** Q206: Traversing speed of the tool while moving to depth in mm/min. Input range 0 to 99999.999; alternatively **FAUTO**, **FU**, **FZ**
- **Infeed for finishing** Q338 (incremental): Infeed per cut. Q338=0: Finishing in one infeed. Input range 0 to 99999.9999
- **Set-up clearance** Q200 (incremental): Distance between tool tip and workpiece surface. Input range 0 to 99999.9999, alternatively **PREDEF**
- **Coordinate of workpiece surface** Q203 (absolute): Coordinate of the workpiece surface. Input range -99999.9999 to 99999.9999
- **2nd set-up clearance** Q204 (incremental): Coordinate in the spindle axis at which no collision between tool and workpiece (fixtures) can occur. Input range 0 to 99999.9999, alternatively **PREDEF**
- **Plunging strategy** Q366: Type of plunging strategy:
  0: vertical plunging. The plunging angle (ANGLE) in the tool table is not evaluated.
  1, 2: reciprocal plunging. In the tool table, the plunging angle **ANGLE** for the active tool must be defined as not equal to 0. Otherwise, the TNC generates an error message
  PREDEF: The TNC uses the value from the GLOBAL DEF block
- **Feed rate for finishing** Q385: Traversing speed of the tool during side and floor finishing in mm/min. Input range 0 to 99999.999; alternatively **FAUTO**, **FU**, **FZ**

NC blocks

```
8 CYCL DEF 254 CIRCULAR SLOT
    Q215=0      ;MACHINING OPERATION
    Q219=12     ;SLOT WIDTH
    Q368=0.2    ;ALLOWANCE FOR SIDE
    Q375=80     ;PITCH CIRCLE DIA.
    Q367=0      ;REF. SLOT POSITION
    Q216=+50    ;CENTER IN 1ST AXIS
    Q217=+50    ;CENTER IN 2ND AXIS
    Q376=+45    ;STARTING ANGLE
    Q248=90     ;ANGULAR LENGTH
    Q378=0      ;STEPPING ANGLE
    Q377=1      ;NR OF REPETITIONS
    Q207=500    ;FEED RATE FOR
                MILLING
    Q351=+1     ;CLIMB OR UP-CUT
    Q201=-20    ;DEPTH
    Q202=5      ;PLUNGING DEPTH
    Q369=0.1    ;ALLOWANCE FOR
                FLOOR
    Q206=150    ;FEED RATE FOR
                PLNGNG
    Q338=5      ;INFEED FOR FINISHING
    Q200=2      ;SET-UP CLEARANCE
    Q203=+0     ;SURFACE COORDINATE
    Q204=50     ;2ND SET-UP
                CLEARANCE
    Q366=1      ;PLUNGE
    Q385=500    ;FINISHING FEED RATE
9 L X+50 Y+50 R0 FMAX M3 M99
```

5.6 RECTANGULAR STUD (Cycle 256, DIN/ISO: G256)

Cycle run

Use Cycle 256 to machine a rectangular stud. If a dimension of the workpiece blank is greater than the maximum possible stepover, then the TNC performs multiple stepovers until the finished dimension has been machined.

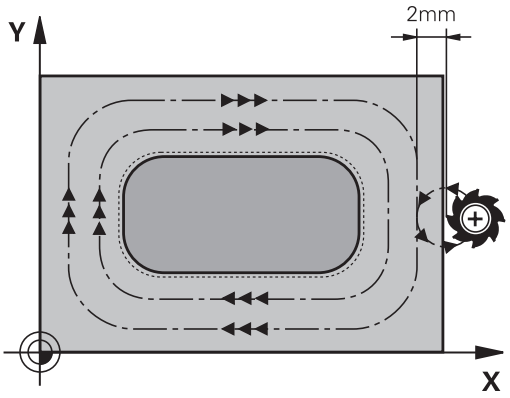

1 The tool moves from the cycle starting position (stud center) to the starting position for stud machining. Specify the starting position with parameter Q437. The standard setting (**Q437=0**) lies 2 mm to the right next to the stud blank
2 If the tool is at the 2nd set-up clearance, it moves at rapid traverse **FMAX** to the set-up clearance, and from there advances to the first plunging depth at the feed rate for plunging.
3 The tool then moves tangentially to the stud contour and machines one revolution.
4 If the finished dimension cannot be machined with one revolution, the TNC performs a stepover with the current factor, and machines another revolution. The TNC takes the dimensions of the workpiece blank, the finished dimension, and the permitted stepover into account. This process is repeated until the defined finished dimension has been reached. If you have set the starting point on a corner (Q437 not equal to 0), the TNC mills on a spiral path from the starting point inward until the finished dimension has been reached.
5 If further stepovers are required the tool then departs the contour on a tangential path and returns to the starting point of stud machining.
6 The TNC then plunges the tool to the next plunging depth, and machines the stud at this depth.
7 This process is repeated until the programmed stud depth is reached.
8 At the end of the cycle, the TNC merely positions the tool in the tool axis at the clearance height defined in the cycle. This means that the end position differs from the starting position.

Please note while programming:

Pre-position the tool in the machining plane to the starting position with radius compensation **R0**. Note parameter Q367 (position).

The TNC automatically pre-positions the tool in the tool axis. Note parameter Q204 (2nd set-up clearance).

The algebraic sign for the cycle parameter DEPTH determines the working direction. If you program DEPTH=0, the cycle will not be executed.

The TNC reduces the infeed depth to the LCUTS tool length defined in the tool table if the tool length is shorter than the Q202 infeed depth programmed in the cycle.

Danger of collision!

Use the machine parameter displayDepthErr to define whether, if a positive depth is entered, the TNC should output an error message (on) or not (off).

Keep in mind that the TNC reverses the calculation for pre-positioning when a **positive depth is entered**. This means that the tool moves at rapid traverse in the tool axis to set-up clearance **below** the workpiece surface!

Leave enough room next to the stud for the approach motion. Minimum: tool diameter + 2 mm

At the end, the TNC positions the tool back to the set-up clearance, or to the 2nd set-up clearance if one was programmed. This means that the end position of the tool after the cycle differs from the starting position.

Cycle parameters

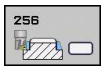

- **1st side length** Q218: Stud length, parallel to the reference axis of the working plane. Input range 0 to 99999.9999
- **Workpiece blank side length 1** Q424: Length of the stud blank, parallel to the reference axis of the working plane. Enter **Workpiece blank side length 1** greater than **1st side length.** The TNC performs multiple stepovers if the difference between blank dimension 1 and finished dimension 1 is greater than the permitted stepover (tool radius multiplied by path overlap **Q370**). The TNC always calculates a constant stepover. Input range 0 to 99999.9999
- **2nd side length** Q219: Stud length, parallel to the minor axis of the working plane. Enter **Workpiece blank side length 2** greater than **2nd side length**. The TNC performs multiple stepovers if the difference between blank dimension 2 and finished dimension 2 is greater than the permitted stepover (tool radius multiplied by path overlap **Q370**). The TNC always calculates a constant stepover. Input range 0 to 99999.9999
- **Workpiece blank side length 2** Q425: Length of the stud blank, parallel to the minor axis of the working plane. Input range 0 to 99999.9999
- **Corner radius** Q220: Radius of the stud corner. Input range 0 to 99999.9999
- **Finishing allowance for side** Q368 (incremental): Finishing allowance in the working plane, is left over after machining. Input range 0 to 99999.9999
- **Angle of rotation** Q224 (absolute): Angle by which the entire machining is rotated. The center of rotation is the position at which the tool is located when the cycle is called. Input range -360.0000 to 360.0000
- **Stud position** Q367: Position of the stud in reference to the position of the tool when the cycle is called:
  0: Tool position = stud center
  1: Tool position = left corner below
  2: Tool position = right corner below
  3: Tool position = right corner top
  4: Tool position = left top corner top
- **Feed rate for milling** Q207: Traversing speed of the tool in mm/min while milling. Input range 0 to 99999.999 alternatively **FAUTO**, **FU**, **FZ**

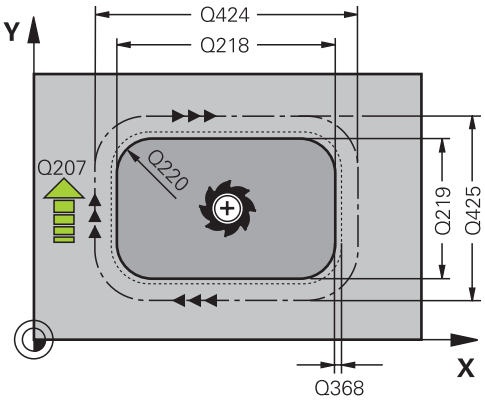

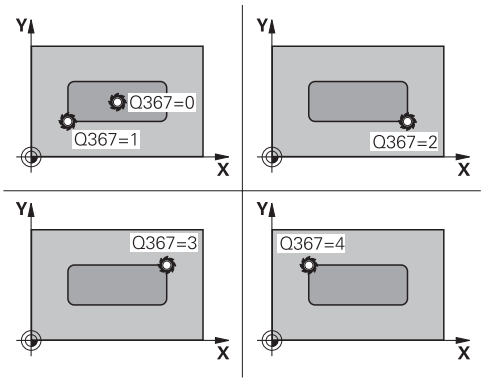

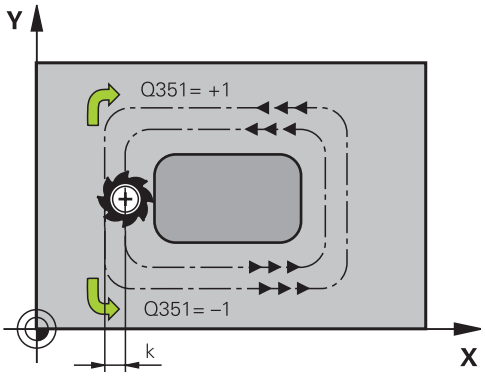

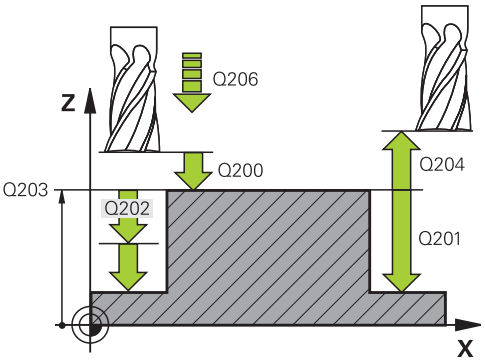

- **Climb or up-cut** Q351: Type of milling operation with M3
  +1 = climb
  -1 = up-cut
  PREDEF: The TNC uses the value from the GLOBAL DEF block
- **Depth** Q201 (incremental): Distance between workpiece surface and bottom of stud. Input range -99999.9999 to 99999.9999
- **Plunging depth** Q202 (incremental): Infeed per cut. Enter a value greater than 0. Input range 0 to 99999.9999
- **Feed rate for plunging** Q206: Traversing speed of the tool while moving to depth in mm/min. Input range 0 to 99999.999; alternatively **FMAX**, **FAUTO**, **FU**, **FZ**
- **Set-up clearance** Q200 (incremental): Distance between tool tip and workpiece surface. Input range 0 to 99999.9999, alternatively **PREDEF**
- **Coordinate of workpiece surface** Q203 (absolute): Coordinate of the workpiece surface. Input range -99999.9999 to 99999.9999
- **2nd set-up clearance** Q204 (incremental): Coordinate in the spindle axis at which no collision between tool and workpiece (fixtures) can occur. Input range 0 to 99999.9999, alternatively **PREDEF**
- **Path overlap factor** Q370: Q370 x tool radius = stepover factor k. Input range 0.1 to 1.414; alternatively **PREDEF**
- **Approach position (0...4)** Q437 Define the approach strategy of the tool:
  0: Right of the stud (default setting)
  1: left corner below
  2: right corner below
  3: right corner top
  4: left corner top. If approach marks on the stud surface are caused by the setting Q437=0, specify another approach position.

NC blocks

```
8 CYCL DEF 256 RECTANGULAR STUD
    Q218=60      ;FIRST SIDE LENGTH
    Q424=74      ;WORKPC. BLANK SIDE 1
    Q219=40      ;2ND SIDE LENGTH
    Q425=60      ;WORKPC. BLANK SIDE 2
    Q220=5       ;CORNER RADIUS
    Q368=0.2     ;ALLOWANCE FOR SIDE
    Q224=+0      ;ANGLE OF ROTATION
    Q367=0       ;STUD POSITION
    Q207=500     ;FEED RATE FOR MILLING
    Q351=+1      ;CLIMB OR UP-CUT
    Q201=-20     ;DEPTH
    Q202=5       ;PLUNGING DEPTH
    Q206=150     ;FEED RATE FOR PLNGNG
    Q200=2       ;SET-UP CLEARANCE
    Q203=+0      ;SURFACE COORDINATE
    Q204=50      ;2ND SET-UP CLEARANCE
    Q370=1       ;TOOL PATH OVERLAP
    Q437=0       ;APPROACH POSITION
9 L X+50 Y+50 R0 FMAX M3 M99
```

5.7 CIRCULAR STUD (Cycle 257, DIN/ISO: G257)

Cycle run

Use Cycle 257 to machine a circular stud. If the diameter of the workpiece blank is greater than the maximum possible stepover, then the TNC performs multiple stepovers until the finished diameter has been machined.

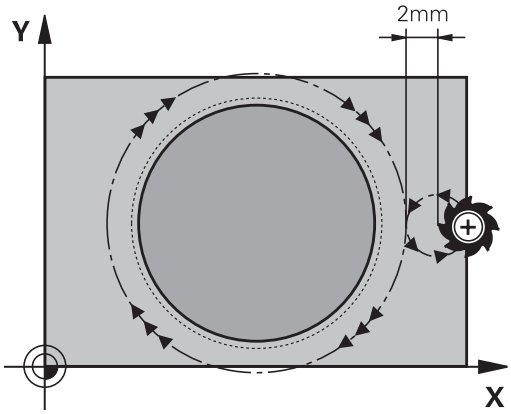

1 The tool moves from the cycle starting position (stud center) to the starting position for stud machining. With the polar angle you specify the starting position with respect to the stud center using parameter Q376.
2 If the tool is at the 2nd set-up clearance, it moves at rapid traverse **FMAX** to the set-up clearance, and from there advances to the first plunging depth at the feed rate for plunging.
3 The tool then moves tangentially on a helical path to the stud contour and machines one revolution.
4 If the finished diameter cannot be machined with one revolution, the TNC performs helical infeed movements until the finished diameter is reached. The TNC takes the dimensions of the workpiece blank diameter, the finished diameter, and the permitted stepover into account.
5 The TNC retracts the tool on a helical path from the contour.
6 If more than one plunging movement is required, the tool repeats the plunging movement at the point next to the departure movement.
7 This process is repeated until the programmed stud depth is reached.
8 At the end of the cycle, the TNC positions the tool—after the helical departure movement—in the tool axis to the 2nd set-up clearance defined in the cycle, and finally to the center of the stud.

Please note while programming:

Pre-position the tool in the machining plane to the starting position (stud center) with radius compensation **R0**.

The TNC automatically pre-positions the tool in the tool axis. Note parameter Q204 (2nd set-up clearance).

The algebraic sign for the cycle parameter DEPTH determines the working direction. If you program DEPTH=0, the cycle will not be executed.

At the end of the cycle, the TNC returns the tool to the starting position.

The TNC reduces the infeed depth to the LCUTS tool length defined in the tool table if the tool length is shorter than the Q202 infeed depth programmed in the cycle.

Danger of collision!

Use the machine parameter displayDepthErr to define whether, if a positive depth is entered, the TNC should output an error message (on) or not (off).

Keep in mind that the TNC reverses the calculation for pre-positioning when a **positive depth is entered**. This means that the tool moves at rapid traverse in the tool axis to set-up clearance **below** the workpiece surface!

Leave enough room next to the stud for the approach motion. Minimum: tool diameter + 2 mm

At the end, the TNC positions the tool back to the set-up clearance, or to the 2nd set-up clearance if one was programmed. This means that the end position of the tool after the cycle differs from the starting position.

Cycle parameters

- **Finished part diameter** Q223: Diameter of the completely machined stud. Input range 0 to 99999.9999
- **Workpiece blank diameter** Q222: Diameter of the workpiece blank. Enter the workpiece blank diameter greater than the finished diameter. The TNC performs multiple stepovers if the difference between the workpiece blank diameter and finished diameter is greater than the permitted stepover (tool radius multiplied by path overlap **Q370**). The TNC always calculates a constant stepover. Input range 0 to 99999.9999
- **Finishing allowance for side** Q368 (incremental): Finishing allowance in the working plane. Input range 0 to 99999.9999
- **Feed rate for milling** Q207: Traversing speed of the tool in mm/min while milling. Input range 0 to 99999.999 alternatively **FAUTO**, **FU**, **FZ**
- **Climb or up-cut** Q351: Type of milling operation with M3
  +1 = climb
  -1 = up-cut
  PREDEF: The TNC uses the value from the GLOBAL DEF block
- **Depth** Q201 (incremental): Distance between workpiece surface and bottom of stud. Input range -99999.9999 to 99999.9999
- **Plunging depth** Q202 (incremental): Infeed per cut. Enter a value greater than 0. Input range 0 to 99999.9999

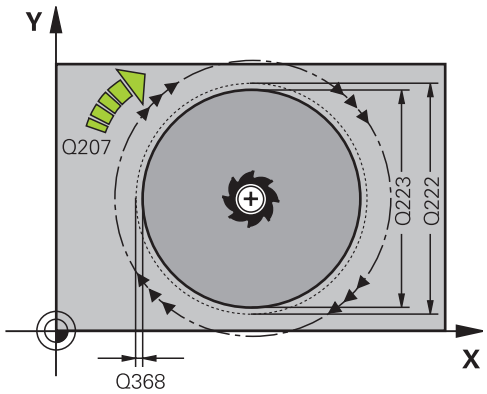

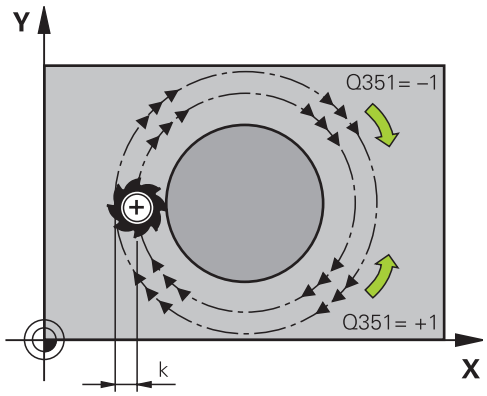

- **Feed rate for plunging** Q206: Traversing speed of the tool while moving to depth in mm/min. Input range 0 to 99999.999; alternatively **FMAX**, **FAUTO**, **FU**, **FZ**
- **Set-up clearance** Q200 (incremental): Distance between tool tip and workpiece surface. Input range 0 to 99999.9999, alternatively **PREDEF**
- **Coordinate of workpiece surface** Q203 (absolute): Coordinate of the workpiece surface. Input range -99999.9999 to 99999.9999
- **2nd set-up clearance** Q204 (incremental): Coordinate in the spindle axis at which no collision between tool and workpiece (fixtures) can occur. Input range 0 to 99999.9999, alternatively **PREDEF**
- **Path overlap factor** Q370: Q370 x tool radius = stepover factor k. Input range 0.1 to 1.414; alternatively **PREDEF**
- **Starting angle** Q376: Polar angle relative to the stud center from which the tool approaches the stud. Input range 0 to 359°

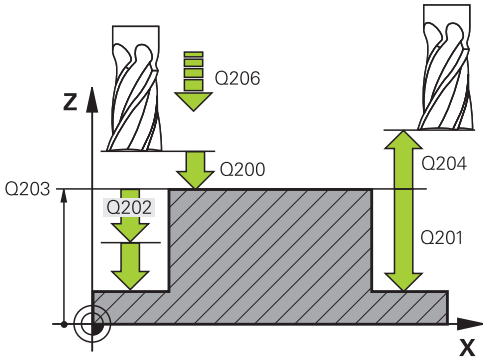

NC blocks

8 CYCL DEF 257 CIRCULAR STUD	
Q223=60	;FINISHED PART DIAMETER
Q222=60	;WORKPIECE BLANK DIAMETER
Q368=0.2	;ALLOWANCE FOR SIDE
Q207=500	;FEED RATE FOR MILLING
Q351=+1	;CLIMB OR UP-CUT
Q201=-20	;DEPTH
Q202=5	;PLUNGING DEPTH
Q206=150	;FEED RATE FOR PLNGNG
Q200=2	;SET-UP CLEARANCE
Q203=+0	;SURFACE COORDINATE
Q204=50	;2ND SET-UP CLEARANCE
Q370=1	;TOOL PATH OVERLAP
Q376=0	;STARTING ANGLE
9 L X+50 Y+50 R0 FMAX M3 M99	

5.8 Programming Examples

Example: Milling pockets, studs and slots

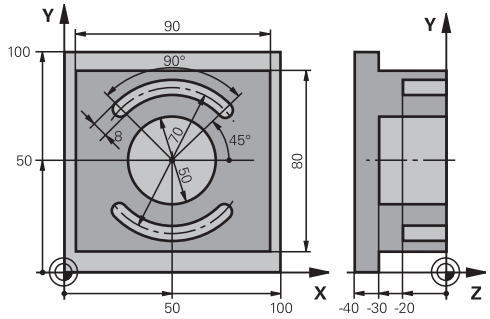

0 BEGINN PGM C210 MM	
1 BLK FORM 0.1 Z X+0 Y+0 Z-40	Definition of workpiece blank
2 BLK FORM 0.2 X+100 Y+100 Z+0	
3 TOOL CALL 1 Z S3500	Call the tool for roughing/finishing
4 L Z+250 R0 FMAX	Retract the tool
5 CYCL DEF 256 RECTANGULAR STUD	Define cycle for machining the contour outside
Q218=90 ;FIRST SIDE LENGTH	
Q424=100 ;WORKPC. BLANK SIDE 1	
Q219=80 ;2ND SIDE LENGTH	
Q425=100 ;WORKPC. BLANK SIDE 2	
Q220=0 ;CORNER RADIUS	
Q368=0 ;ALLOWANCE FOR SIDE	
Q224=0 ;ANGLE OF ROTATION	
Q367=0 ;STUD POSITION	
Q207=250 ;FEED RATE FOR MILLING	
Q351=+1 ;CLIMB OR UP-CUT	
Q201=-30 ;DEPTH	
Q202=5 ;PLUNGING DEPTH	
Q206=250 ;FEED RATE FOR PLNGNG	
Q200=2 ;SET-UP CLEARANCE	
Q203=+0 ;SURFACE COORDINATE	
Q204=20 ;2ND SET-UP CLEARANCE	
Q370=1 ;TOOL PATH OVERLAP	
Q437=0 ;APPROACH POSITION	
6 L X+50 Y+50 R0 M3 M99	Call cycle for machining the contour outside
7 CYCL DEF 252 CIRCULAR POCKET	Define CIRCULAR POCKET MILLING cycle
Q215=0 ;MACHINING OPERATION	
Q223=50 ;CIRCLE DIAMETER	
Q368=0.2 ;ALLOWANCE FOR SIDE	
Q207=500 ;FEED RATE FOR MILLING	
Q351=+1 ;CLIMB OR UP-CUT	

Q201=-30	;DEPTH	
Q202=5	;PLUNGING DEPTH	
Q369=0.1	;ALLOWANCE FOR FLOOR	
Q206=150	;FEED RATE FOR PLNGNG	
Q338=5	;INFEED FOR FINISHING	
Q200=2	;SET-UP CLEARANCE	
Q203=+0	;SURFACE COORDINATE	
Q204=50	;2ND SET-UP CLEARANCE	
Q370=1	;TOOL PATH OVERLAP	
Q366=1	;PLUNGE	
Q385=750	;FINISHING FEED RATE	
8 L X+50 Y+50 R0 FMAX M99		Call CIRCULAR POCKET MILLING cycle
9 L Z+250 R0 FMAX M6		Tool change
10 TOLL CALL 2 Z S5000		Call tool: slotting mill
11 CYCL DEF 254 CIRCULAR SLOT		Define SLOT cycle
Q215=0	;MACHINING OPERATION	
Q219=8	;SLOT WIDTH	
Q368=0.2	;ALLOWANCE FOR SIDE	
Q375=70	;PITCH CIRCLE DIA.	
Q367=0	;REF. SLOT POSITION	No pre-positioning in X/Y required
Q216=+50	;CENTER IN 1ST AXIS	
Q217=+50	;CENTER IN 2ND AXIS	
Q376=+45	;STARTING ANGLE	
Q248=90	;ANGULAR LENGTH	
Q378=180	;STEPPING ANGLE	Starting point for second slot
Q377=2	;NR OF REPETITIONS	
Q207=500	;FEED RATE FOR MILLING	
Q351=+1	;CLIMB OR UP-CUT	
Q201=-20	;DEPTH	
Q202=5	;PLUNGING DEPTH	
Q369=0.1	;ALLOWANCE FOR FLOOR	
Q206=150	;FEED RATE FOR PLNGNG	
Q338=5	;INFEED FOR FINISHING	
Q200=2	;SET-UP CLEARANCE	
Q203=+0	;SURFACE COORDINATE	
Q204=50	;2ND SET-UP CLEARANCE	
Q366=1	;PLUNGE	
12 CYCL CALL FMAX M3		Call SLOT cycle
13 L Z+250 R0 FMAX M2		Retract in the tool axis, end program
14 END PGM C210 MM		

6

Fixed Cycles: Pattern Definitions

6.1 Fundamentals

Overview

The TNC provides two cycles for machining point patterns directly:

Cycle	Soft key	Page
220 POLAR PATTERN	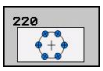	147
221 CARTESIAN PATTERN	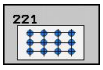	149

You can combine Cycle 220 and Cycle 221 with the following fixed cycles:

> If you have to machine irregular point patterns, use **CYCL CALL PAT**(See "Point tables") to develop point tables.
> More regular point patterns are available with the **PATTERN DEF** function (See "PATTERN DEF pattern definition").

Cycle 200	DRILLING
Cycle 201	REAMING
Cycle 202	BORING
Cycle 203	UNIVERSAL DRILLING
Cycle 204	BACK BORING
Cycle 205	UNIVERSAL PECKING
Cycle 206	TAPPING NEW with a floating tap holder
Cycle 207	RIGID TAPPING without a floating tap holder NEW
Cycle 208	BORE MILLING
Cycle 209	TAPPING WITH CHIP BREAKING
Cycle 240	CENTERING
Cycle 251	RECTANGULAR POCKET
Cycle 252	CIRCULAR POCKET MILLING
Cycle 253	SLOT MILLING
Cycle 254	CIRCULAR SLOT (can only be combined with Cycle 221)
Cycle 256	RECTANGULAR STUD
Cycle 257	CIRCULAR STUD
Cycle 262	THREAD MILLING
Cycle 263	THREAD MILLING/COUNTERSINKING
Cycle 264	THREAD DRILLING/MILLING
Cycle 265	HELICAL THREAD DRILLING/MILLING
Cycle 267	OUTSIDE THREAD MILLING

6.2 CIRCULAR PATTERN (Cycle 220, DIN/ISO: G220)

Cycle run

1 At rapid traverse, the TNC moves the tool from its current position to the starting point for the first machining operation.

Sequence:

- 2. Move to the 2nd set-up clearance (spindle axis)
- Approach the starting point in the spindle axis.
- Move to the set-up clearance above the workpiece surface (spindle axis).

2 From this position, the TNC executes the last defined fixed cycle.

3 The tool then approaches on a straight line or circular arc the starting point for the next machining operation. The tool stops at the set-up clearance (or the 2nd set-up clearance).

4 This process (1 to 3) is repeated until all machining operations have been executed.

Please note while programming:

Cycle 220 is DEF active, which means that Cycle 220 automatically calls the last defined fixed cycle.

If you combine Cycle 220 with one of the fixed cycles 200 to 209 and 251 to 267, the set-up clearance, workpiece surface and 2nd set-up clearance that you defined in Cycle 220 will be effective for the selected fixed cycle.

Cycle parameters

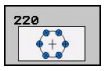

- **Center in 1st axis** Q216 (absolute): Center of the pitch circle in the reference axis of the working plane. Input range -99999.9999 to 99999.9999
- **Center in 2nd axis** Q217 (absolute): Center of the pitch circle in the minor axis of the working plane. Input range -99999.9999 to 99999.9999
- **Pitch circle diameter** Q244: Diameter of the pitch circle. Input range 0 to 99999.9999
- **Starting angle** Q245 (absolute): Angle between the reference axis of the working plane and the starting point for the first machining operation on the pitch circle. Input range -360.000 to 360.000

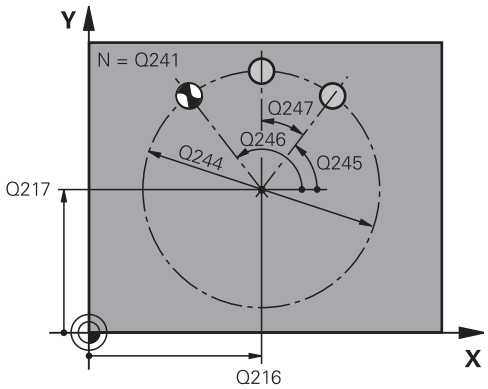

- **Stopping angle** Q246 (absolute): Angle between the reference axis of the working plane and the starting point for the last machining operation on the pitch circle (does not apply to full circles). Do not enter the same value for the stopping angle and starting angle. If you enter the stopping angle greater than the starting angle, machining will be carried out counterclockwise; otherwise, machining will be clockwise. Input range -360.000 to 360.000
- **Stepping angle** Q247 (incremental): Angle between two machining operations on a pitch circle. If you enter an angle step of 0, the TNC will calculate the angle step from the starting and stopping angles and the number of pattern repetitions. If you enter a value other than 0, the TNC will not take the stopping angle into account. The sign for the angle step determines the working direction (negative = clockwise). Input range -360.000 to 360.000
- **Number of repetitions** Q241: Number of machining operations on a pitch circle. Input range 1 to 99999
- **Set-up clearance** Q200 (incremental): Distance between tool tip and workpiece surface. Input range 0 to 99999.9999
- **Coordinate of workpiece surface** Q203 (absolute): Coordinate of the workpiece surface. Input range -99999.9999 to 99999.9999
- **2nd set-up clearance** Q204 (incremental): Coordinate in the spindle axis at which no collision between tool and workpiece (fixtures) can occur. Input range 0 to 99999.9999
- **Traversing to clearance height** Q301: Definition of how the touch probe is to move between machining operations:
  0: Move at set-up clearance between machining operations
  1: Move at 2nd set-up clearance between machining operations
- **Type of traverse? Line=0/Arc=1** Q365: Definition of the path function with which the tool moves between machining operations:
  0: Move in a straight line between machining operations
  1: Move in a circular arc on the pitch circle diameter between machining operations

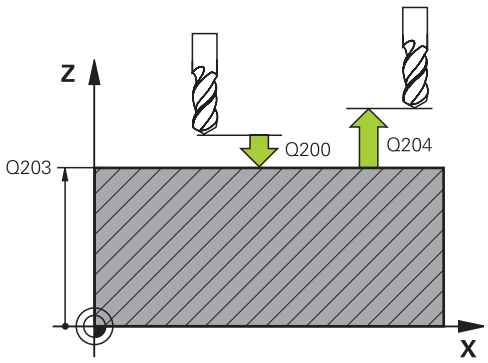

NC blocks

53 CYCL DEF 220 POLAR PATTERN	
Q216=+50	;CENTER IN 1ST AXIS
Q217=+50	;CENTER IN 2ND AXIS
Q244=80	;PITCH CIRCLE DIA.
Q245=+0	;STARTING ANGLE
Q246=+360	;STOPPING ANGLE
Q247=+0	;STEPPING ANGLE
Q241=8	;NR OF REPETITIONS
Q200=2	;SET-UP CLEARANCE
Q203=+30	;SURFACE COORDINATE
Q204=50	;2ND SET-UP CLEARANCE
Q301=1	;MOVE TO CLEARANCE
Q365=0	;TYPE OF TRAVERSE

6.3 LINEAR PATTERN (Cycle 221, DIN/ISO: G221)

Cycle run

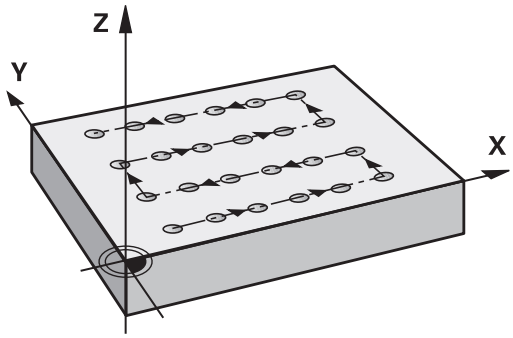

1 The TNC automatically moves the tool from its current position to the starting point for the first machining operation.

   Sequence:
   - 2. Move to the set-up clearance (spindle axis)
   - Approach the starting point in the machining plane
   - Move to the set-up clearance above the workpiece surface (spindle axis)

2 From this position, the TNC executes the last defined fixed cycle.

3 The tool then approaches the starting point for the next machining operation in the positive reference axis direction at set-up clearance (or 2nd set-up clearance).

4 This process (1 to 3) is repeated until all machining operations on the first line have been executed. The tool is located above the last point on the first line.

5 The tool subsequently moves to the last point on the second line where it carries out the machining operation.

6 From this position, the tool approaches the starting point for the next machining operation in the negative reference axis direction.

7 This process (6) is repeated until all machining operations in the second line have been executed.

8 The tool then moves to the starting point of the next line.

9 All subsequent lines are processed in a reciprocating movement.

Please note while programming:

Cycle 221 is DEF active, which means that Cycle 221 automatically calls the last defined fixed cycle.

If you combine Cycle 221 with one of the fixed cycles 200 to 209 and 251 to 267, the set-up clearance, workpiece surface, 2nd set-up clearance and the rotational position that you defined in Cycle 221 will be effective for the selected fixed cycle.

The slot position 0 is not allowed if you use Cycle 254 Circular Slot in combination with Cycle 221.

Cycle parameters

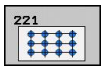

- **Starting point in 1st axis** Q225 (absolute): Coordinate of the starting point in the reference axis of the working plane.
- **Starting point 2nd axis** Q226 (absolute): Coordinate of the starting point in the minor axis of the machining plane
- **Spacing in 1st axis** Q237 (incremental): Spacing between each point on a line
- **Spacing in 2nd axis** Q238 (incremental): Spacing between each line
- **Number of columns** Q242: Number of machining operations on a line
- **Number of lines** Q243: Number of lines
- **Angle of rotation** Q224 (absolute): Angle by which the entire pattern is rotated. The center of rotation lies in the starting point
- **Set-up clearance** Q200 (incremental): Distance between tool tip and workpiece surface. Input range 0 to 99999.9999
- **Coordinate of workpiece surface** Q203 (absolute): Coordinate of the workpiece surface. Input range -99999.9999 to 99999.9999
- **2nd set-up clearance** Q204 (incremental): Coordinate in the spindle axis at which no collision between tool and workpiece (fixtures) can occur. Input range 0 to 99999.9999
- **Traversing to clearance height** Q301: Definition of how the touch probe is to move between machining operations:
  0: Move at set-up clearance between machining operations
  1: Move at 2nd set-up clearance between machining operations

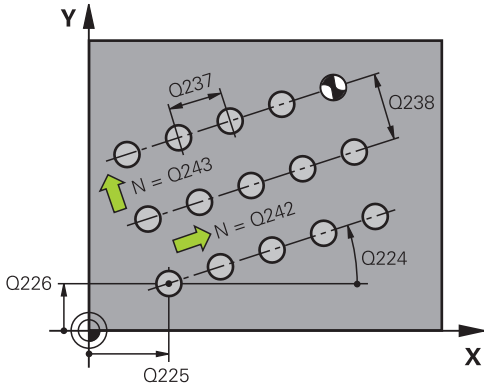

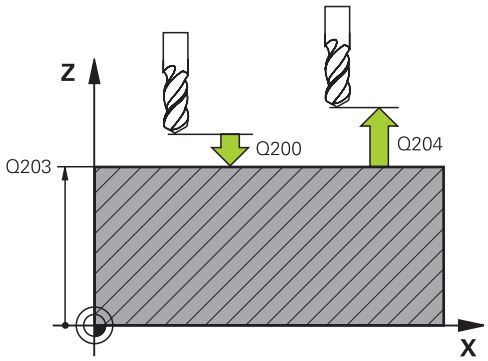

NC blocks

54 CYCL DEF 221 CARTESIAN PATTERN	
Q225=+15	;STARTNG PNT 1ST AXIS
Q226=+15	;STARTNG PNT 2ND AXIS
Q237=+10	;SPACING IN 1ST AXIS
Q238=+8	;SPACING IN 2ND AXIS
Q242=6	;NUMBER OF COLUMNS
Q243=4	;NUMBER OF LINES
Q224=+15	;ANGLE OF ROTATION
Q200=2	;SET-UP CLEARANCE
Q203=+30	;SURFACE COORDINATE
Q204=50	;2ND SET-UP CLEARANCE
Q301=1	;MOVE TO CLEARANCE

6.4 Programming Examples

Example: Polar hole patterns

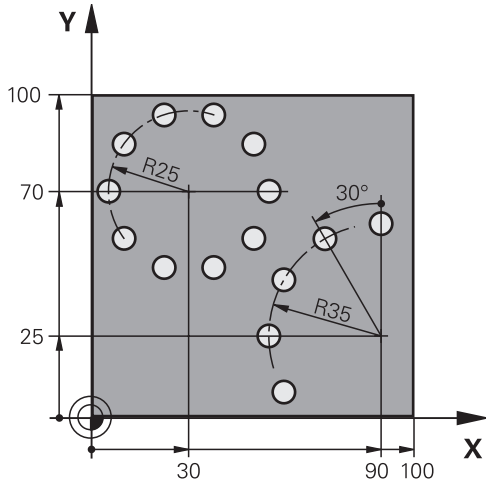

0 BEGIN PGM BOHRB MM		
1 BLK FORM 0.1 Z X+0 Y+0 Z-40		Definition of workpiece blank
2 BLK FORM 0.2 Y+100 Y+100 Z+0		
3 TOOL CALL 1 Z S3500		Tool call
4 L Z+250 R0 FMAX M3		Retract the tool
5 CYCL DEF 200 DRILLING		Cycle definition: drilling
Q200=2	;SET-UP CLEARANCE	
Q201=-15	;DEPTH	
Q206=250	;FEED RATE FOR PLNGNG	
Q202=4	;PLUNGING DEPTH	
Q211=0	;DWELL TIME AT TOP	
Q203=+0	;SURFACE COORDINATE	
Q204=0	;2ND SET-UP CLEARANCE	
Q211=0.25	;DWELL TIME AT BOTTOM	
6 CYCL DEF 220 POLAR PATTERN		Define cycle for polar pattern 1, CYCL 200 is called automatically; Q200, Q203 and Q204 are effective as defined in Cycle 220.
Q216=+30	;CENTER IN 1ST AXIS	
Q217=+70	;CENTER IN 2ND AXIS	
Q244=50	;PITCH CIRCLE DIA.	
Q245=+0	;STARTING ANGLE	
Q246=+360	;STOPPING ANGLE	
Q247=+0	;STEPPING ANGLE	
Q241=10	;NR OF REPETITIONS	
Q200=2	;SET-UP CLEARANCE	
Q203=+0	;SURFACE COORDINATE	
Q204=100	;2ND SET-UP CLEARANCE	

Q301=1	;MOVE TO CLEARANCE	
Q365=0	;TYPE OF TRAVERSE	
7 CYCL DEF 220 POLAR PATTERN		Define cycle for polar pattern 2, CYCL 200 is called automatically; Q200, Q203 and Q204 are effective as defined in Cycle 220.
Q216=+90	;CENTER IN 1ST AXIS	
Q217=+25	;CENTER IN 2ND AXIS	
Q244=70	;PITCH CIRCLE DIA.	
Q245=+90	;STARTING ANGLE	
Q246=+360	;STOPPING ANGLE	
Q247=+30	;STEPPING ANGLE	
Q241=5	;NR OF REPETITIONS	
Q200=2	;SET-UP CLEARANCE	
Q203=+0	;SURFACE COORDINATE	
Q204=100	;2ND SET-UP CLEARANCE	
Q301=1	;MOVE TO CLEARANCE	
Q365=0	;TYPE OF TRAVERSE	
8 L Z+250 R0 FMAX M2		Retract in the tool axis, end program
9 END PGM BOHRB MM		

7

Fixed Cycles: Contour Pocket

7.1 SL Cycles

Fundamentals

SL cycles enable you to form complex contours by combining up to 12 subcontours (pockets or islands). You define the individual subcontours in subprograms. The TNC calculates the total contour from the subcontours (subprogram numbers) that you enter in Cycle 14 CONTOUR GEOMETRY.

The memory capacity for programming an SL cycle is limited. You can program up to 16384 contour elements in one SL cycle.

SL cycles conduct comprehensive and complex internal calculations as well as the resulting machining operations. For safety reasons, always run a graphical program test before machining! This is a simple way of finding out whether the TNC-calculated program will provide the desired results.

When you use local **QL** Q parameters in a contour subprogram you must also assign or calculate these in the contour subprogram.

Characteristics of the subprograms

- Coordinate transformations are allowed. If they are programmed within the subcontour they are also effective in the following subprograms, but they need not be reset after the cycle call.
- The TNC recognizes a pocket if the tool path lies inside the contour, for example if you machine the contour clockwise with radius compensation RR.
- The TNC recognizes an island if the tool path lies outside the contour, for example if you machine the contour clockwise with radius compensation RL.
- The subprograms must not contain spindle axis coordinates.
- Always program both axes in the first block of the subprogram
- If you use Q parameters, then only perform the calculations and assignments within the affected contour subprograms.

Program structure: Machining with SL cycles

```
0 BEGIN PGM SL2 MM
...
12 CYCL DEF 14 CONTOUR...
13 CYCL DEF 20 CONTOUR DATA...
...
16 CYCL DEF 21 PILOT DRILLING...
17 CYCL CALL
...
18 CYCL DEF 22 ROUGH-OUT...
19 CYCL CALL
...
22 CYCL DEF 23 FLOOR FINISHING...
23 CYCL CALL
...
26 CYCL DEF 24 SIDE FINISHING...
27 CYCL CALL
...
50 L Z+250 R0 FMAX M2
51 LBL 1
...
55 LBL 0
56 LBL 2
...
60 LBL 0
...
99 END PGM SL2 MM
```

Characteristics of the fixed cycles

- The TNC automatically positions the tool to the set-up clearance before a cycle.
- Each level of infeed depth is milled without interruptions since the cutter traverses around islands instead of over them.
- The radius of "inside corners" can be programmed—the tool keeps moving to prevent surface blemishes at inside corners (this applies to the outermost pass in the Rough-out and Side Finishing cycles).
- The contour is approached in a tangential arc for side finishing.
- For floor finishing, the tool again approaches the workpiece on a tangential arc (for spindle axis Z, for example, the arc may be in the Z/X plane).
- The contour is machined throughout in either climb or up-cut milling.

The machining data (such as milling depth, finishing allowance and set-up clearance) are entered as CONTOUR DATA in Cycle 20.

Overview

Cycle	Soft key	Page
14 CONTOUR GEOMETRY (essential)	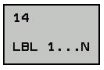	156
20 CONTOUR DATA (essential)	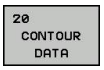	160
21 PILOT DRILLING (optional)		162
22 ROUGH-OUT (essential)	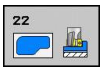	164
23 FLOOR FINISHING (optional)		167
24 SIDE FINISHING (optional)		168

Enhanced cycles:

Cycle	Soft key	Page
25 CONTOUR TRAIN		170

7.2 CONTOUR (Cycle 14, DIN/ISO: G37)

Please note while programming:

All subprograms that are superimposed to define the contour are listed in Cycle 14 CONTOUR GEOMETRY.

> Cycle 14 is DEF active which means that it becomes effective as soon as it is defined in the part program.
>
> You can list up to 12 subprograms (subcontours) in Cycle 14.

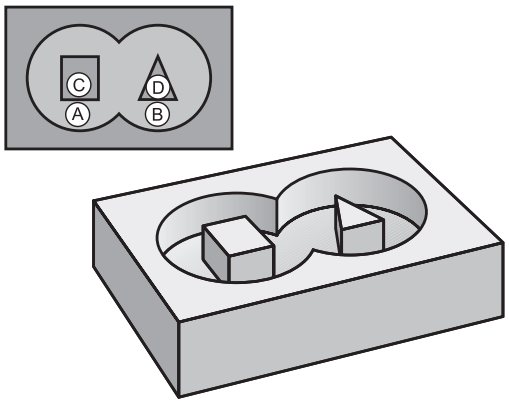

Cycle parameters

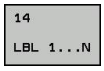

- **Label numbers for the contour**: Enter all label numbers for the individual subprograms that are to be superimposed to define the contour. Confirm every label number with the ENT key. When you have entered all numbers, conclude entry with the END key. Entry of up to 12 subprogram numbers 1 to 254.

7.3 Superimposed contours

Fundamentals

Pockets and islands can be overlapped to form a new contour. You can thus enlarge the area of a pocket by another pocket or reduce it by an island.

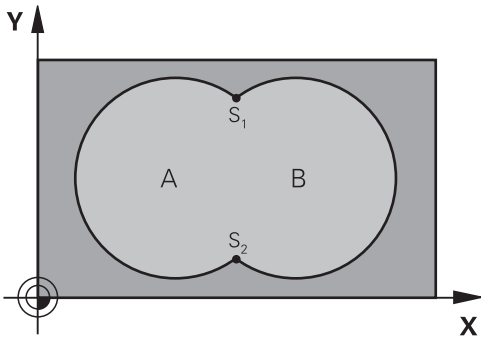

NC blocks

12 CYCL DEF 14.0 CONTOUR
13 CYCL DEF 14.1 CONTOUR LABEL 1/2/3/4

Subprograms: overlapping pockets

The subsequent programming examples are contour subprograms that are called by Cycle 14 CONTOUR GEOMETRY in a main program.

Pockets A and B overlap.

The TNC calculates the points of intersection S1 and S2 (they do not have to be programmed).

The pockets are programmed as full circles.

Subprogram 1: Pocket A

```
51 LBL 1
52 L X+10 Y+50 RR
53 CC X+35 Y+50
54 C X+10 Y+50 DR-
55 LBL 0
```

Subprogram 2: Pocket B

```
56 LBL 2
57 L X+90 Y+50 RR
58 CC X+65 Y+50
59 C X+90 Y+50 DR-
60 LBL 0
```

Area of inclusion

Both surfaces A and B are to be machined, including the overlapping area:

- The surfaces A and B must be pockets.
- The first pocket (in Cycle 14) must start outside the second pocket.

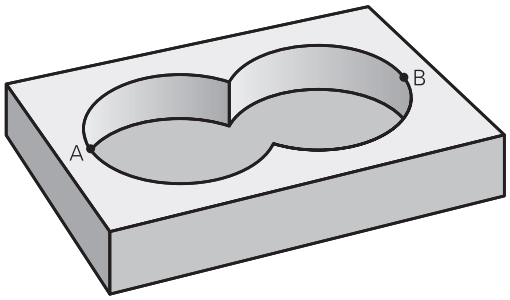

Surface A:

```
51 LBL 1
52 L X+10 Y+50 RR
53 CC X+35 Y+50
54 C X+10 Y+50 DR-
55 LBL 0
```

Surface B:

```
56 LBL 2
57 L X+90 Y+50 RR
58 CC X+65 Y+50
59 C X+90 Y+50 DR-
60 LBL 0
```

Area of exclusion

Surface A is to be machined without the portion overlapped by B:

- Surface A must be a pocket and B an island.
- A must start outside of B.
- B must start inside of A.

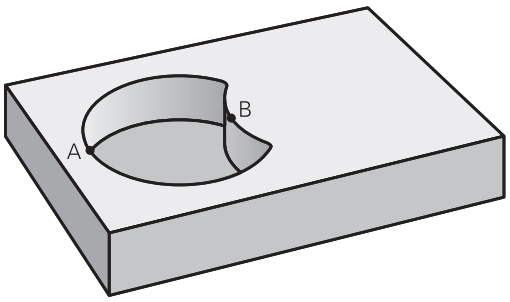

Surface A:

```
51 LBL 1
52 L X+10 Y+50 RR
53 CC X+35 Y+50
54 C X+10 Y+50 DR-
55 LBL 0
```

Surface B:

```
56 LBL 2
57 L X+40 Y+50 RL
58 CC X+65 Y+50
59 C X+40 Y+50 DR-
60 LBL 0
```

Area of intersection

Only the area where A and B overlap is to be machined. (The areas covered by A or B alone are to be left unmachined.)

- A and B must be pockets.
- A must start inside of B.

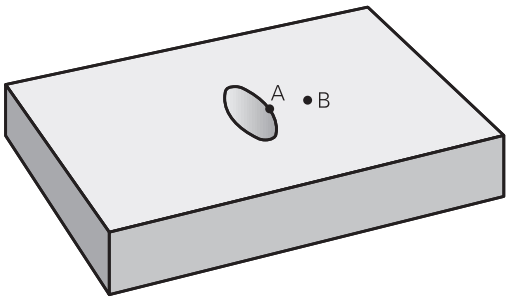

Surface A:

```
51 LBL 1
52 L X+60 Y+50 RR
53 CC X+35 Y+50
54 C X+60 Y+50 DR-
55 LBL 0
```

Surface B:

```
56 LBL 2
57 L X+90 Y+50 RR
58 CC X+65 Y+50
59 C X+90 Y+50 DR-
60 LBL 0
```

7.4 CONTOUR DATA (Cycle 20, DIN/ISO: G120)

Please note while programming:

Machining data for the subprograms describing the subcontours are entered in Cycle 20.

Cycle 20 is DEF active, which means that it becomes effective as soon as it is defined in the part program.

The machining data entered in Cycle 20 are valid for Cycles 21 to 24.

The algebraic sign for the cycle parameter DEPTH determines the working direction. If you program DEPTH=0, the cycle will not be executed.

If you are using the SL cycles in Q parameter programs, the cycle parameters Q1 to Q20 cannot be used as program parameters.

Cycle parameters

20 CONTOUR DATA

- **Milling depth** Q1 (incremental): Distance between workpiece surface and bottom of pocket. Input range -99999.9999 to 99999.9999
- **Path overlap** factor Q2: Q2 x tool radius = stepover factor k. Input range -0.0001 to 1.9999
- **Finishing allowance for side** Q3 (incremental): Finishing allowance in the working plane. Input range -99999.9999 to 99999.9999
- **Finishing allowance for floor** Q4 (incremental): Finishing allowance in the tool axis. Input range -99999.9999 to 99999.9999
- **Workpiece surface coordinate** Q5 (absolute): Absolute coordinate of the workpiece surface. Input range -99999.9999 to 99999.9999
- **Set-up clearance** Q6 (incremental): Distance between tool tip and workpiece surface. Input range 0 to 99999.9999
- **Clearance height** Q7 (absolute): Absolute height at which the tool cannot collide with the workpiece (for intermediate positioning and retraction at the end of the cycle). Input range -99999.9999 to 99999.9999
- **Inside corner radius** Q8: Inside "corner" rounding radius; entered value is referenced to the path of the tool center and is used to calculate smoother traverse motions between the contour elements. **Q8 is not a radius that is inserted as a separate contour element between programmed elements!** Input range 0 to 99999.9999
- **Direction of rotation?** Q9: Machining direction for pockets.
  - Q9 = –1 up-cut milling for pocket and island
  - Q9 = +1 climb milling for pocket and island

You can check the machining parameters during a program interruption and overwrite them if required.

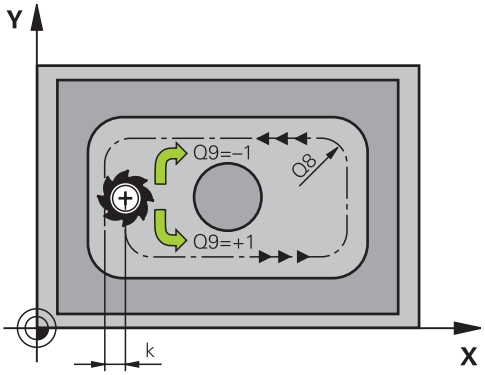

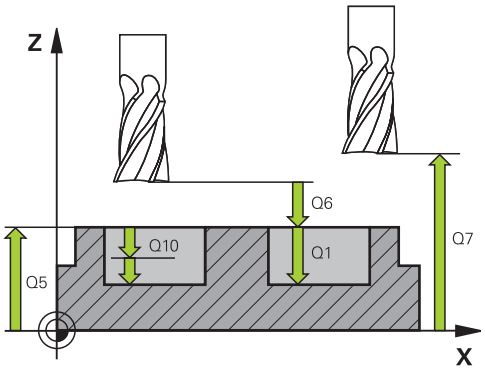

NC blocks

57 CYCL DEF 20 CONTOUR DATA	
Q1=-20	;MILLING DEPTH
Q2=1	;TOOL PATH OVERLAP
Q3=+0.2	;ALLOWANCE FOR SIDE
Q4=+0.1	;ALLOWANCE FOR FLOOR
Q5=+30	;SURFACE COORDINATE
Q6=2	;SET-UP CLEARANCE
Q7=+80	;CLEARANCE HEIGHT
Q8=0.5	;ROUNDING RADIUS
Q9=+1	;DIRECTION OF ROTATION

7.5 PILOT DRILLING (Cycle 21, DIN/ISO: G121)

Cycle run

1 The tool drills from the current position to the first plunging depth at the programmed feed rate **F**.
2 When it reaches the first plunging depth, the tool retracts in rapid traverse **FMAX** to the starting position and advances again to the first plunging depth minus the advanced stop distance t.
3 The advanced stop distance is automatically calculated by the control:
   - At a total hole depth up to 30 mm: t = 0.6 mm
   - At a total hole depth exceeding 30 mm: t = hole depth / 50
   - Maximum advanced stop distance: 7 mm
4 The tool then advances with another infeed at the programmed feed rate F.
5 The TNC repeats this process (1 to 4) until the programmed total hole depth is reached.
6 After a dwell time at the hole bottom, the tool is returned to the starting position in rapid traverse **FMAX** for chip breaking.

Application

Cycle 21 is for PILOT DRILLING of the cutter infeed points. It accounts for the allowance for side and the allowance for floor as well as the radius of the rough-out tool. The cutter infeed points also serve as starting points for roughing.

Please note while programming:

When calculating the infeed points, the TNC does not account for the delta value **DR** programmed in a **TOOL CALL** block.

In narrow areas, the TNC may not be able to carry out pilot drilling with a tool that is larger than the rough-out tool.

Cycle parameters

- **Plunging depth** Q10 (incremental): Dimension by which the tool drills in each infeed (negative sign for negative working direction). Input range -99999.9999 to 99999.9999
- **Feed rate for plunging** Q11: Traversing speed of the tool when plunging into the workpiece in mm/min. Input range 0 to 99999.9999 alternatively **FAUTO**, **FU**, **FZ**
- **Rough-out tool number/name** Q13 or QS13: Number or name of rough-out tool. Input range 0 to 32767.9 if a number is entered; maximum 16 characters if a name is entered.

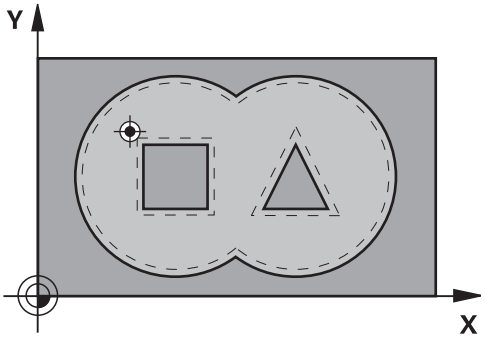

NC blocks

```
58 CYCL DEF 21 PILOT DRILLING
    Q10=+5        ;PLUNGING DEPTH
    Q11=100       ;FEED RATE FOR
                  PLNGNG
    Q13=1         ;ROUGH-OUT TOOL
```

7.6 ROUGHING (Cycle 22, DIN/ISO: G122)

Cycle run

1 The TNC positions the tool over the cutter infeed point, taking the allowance for side into account.
2 In the first plunging depth, the tool mills the contour from inside outward at the milling feed rate.
3 First the island contours (C and D in the figure at right) are rough-milled until the pocket contour (A, B) is approached.
4 In the next step the TNC moves the tool to the next plunging depth and repeats the roughing procedure until the program depth is reached.
5 Finally the TNC retracts the tool to the clearance height.

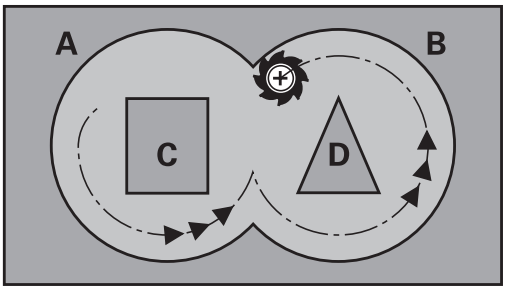

Please note while programming:

This cycle requires a center-cut end mill (ISO 1641) or pilot drilling with Cycle 21.

You define the plunging behavior of Cycle 22 with parameter Q19 and with the tool table in the **ANGLE** and **LCUTS** columns:

- If Q19=0 is defined, the TNC always plunges perpendicularly, even if a plunge angle (**ANGLE**) is defined for the active tool.
- If you define the **ANGLE**=90°, the TNC plunges perpendicularly. The reciprocation feed rate Q19 is used as plunging feed rate.
- If the reciprocation feed rate Q19 is defined in Cycle 22 and **ANGLE** is defined between 0.1 and 89.999 in the tool table, the TNC plunges helically at the defined **ANGLE**.
- If the reciprocation feed is defined in Cycle 22 and no **ANGLE** is in the tool table, the TNC displays an error message.
- If geometrical conditions do not allow helical plunging (slot geometry), the TNC tries a reciprocating plunge. The reciprocation length is calculated from **LCUTS** and **ANGLE** (reciprocation length = **LCUTS** / tan **ANGLE**).

If you clear out an acute inside corner and use an overlap factor greater than 1, some material might be left over. Check especially the innermost path in the test run graphic and, if necessary, change the overlap factor slightly. This allows another distribution of cuts, which often provides the desired results.

During fine roughing the TNC does not take a defined wear value **DR** of the coarse roughing tool into account.

Danger of collision!

After executing an SL cycle you must program the first traverse motion in the working plane with both coordinate data, e.g. **L X+80 Y+0 R0 FMAX**.

Cycle parameters

- **Plunging depth** Q10 (incremental): Infeed per cut. Input range -99999.9999 to 99999.9999
- **Feed rate for plunging** Q11: Traversing speed of the tool in the spindle axis. Input range 0 to 99999.9999, alternatively **FAUTO**, **FU**, **FZ**
- **Feed rate for milling** Q12: Traversing speed of the tool in the working plane. Input range 0 to 99999.9999, alternatively **FAUTO**, **FU**, **FZ**
- **Coarse roughing tool** Q18 or QS18: Number or name of the tool with which the TNC has already coarse-roughed the contour. Press the TOOL NAME soft key to switch to name input. The TNC automatically inserts the closing quotation mark when you exit the input field. If there was no coarse roughing, enter "0"; if you enter a number or a name, the TNC will only rough-out the portion that could not be machined with the coarse roughing tool. If the portion that is to be roughed cannot be approached from the side, the TNC will mill in a reciprocating plunge-cut; for this purpose you must enter the tool length **LCUTS** in the tool table TOOL.T and define the maximum plunging **ANGLE** of the tool. The TNC will otherwise generate an error message. Input range 0 to 32767.9 if a number is entered; maximum 16 characters if a name is entered.
- **Reciprocation feed rate** Q19: Traversing speed of the tool in mm/min during reciprocating plunge cut. Input range 0 to 99999.9999; alternatively **FAUTO**, **FU**, **FZ**
- **Retraction feed rate** Q208: Traversing speed of the tool in mm/min when retracting after machining. If you enter Q208 = 0, the TNC retracts the tool at the feed rate in Q12. Input range 0 to 99999.9999, alternatively **FMAX,FAUTO**

NC blocks

```
59 CYCL DEF 22 ROUGH-OUT
    Q10=+5        ;PLUNGING DEPTH
    Q11=100       ;FEED RATE FOR PLNGNG
    Q12=750       ;FEED RATE FOR MILLING
    Q18=1         ;COARSE ROUGHING TOOL
    Q19=150       ;RECIPROCATION FEED RATE
    Q208=9999     ;RETRACTION FEED RATE
```

7.7 FLOOR FINISHING (Cycle 23, DIN/ISO: G123)

Cycle run

The tool approaches the machining plane smoothly (on a vertically tangential arc) if there is sufficient room. If there is not enough room, the TNC moves the tool to depth vertically. The tool then clears the finishing allowance remaining from rough-out.

Please note while programming:

The TNC automatically calculates the starting point for finishing. The starting point depends on the available space in the pocket.

The approaching radius for pre-positioning to the final depth is permanently defined and independent of the plunging angle of the tool.

Danger of collision!

After executing an SL cycle you must program the first traverse motion in the working plane with both coordinate data, e.g. **L X+80 Y+0 R0 FMAX**.

Cycle parameters

- **Feed rate for plunging** Q11: Traversing speed of the tool when plunging into the workpiece in mm/min. Input range 0 to 99999.9999 alternatively **FAUTO**, **FU**, **FZ**
- **Feed rate for milling** Q12: Traversing speed of the tool in the working plane. Input range 0 to 99999.9999, alternatively **FAUTO**, **FU**, **FZ**
- **Retraction feed rate** Q208: Traversing speed of the tool in mm/min when retracting after machining. If you enter Q208 = 0, the TNC retracts the tool at the feed rate in Q12. Input range 0 to 99999.9999, alternatively **FMAX,FAUTO**

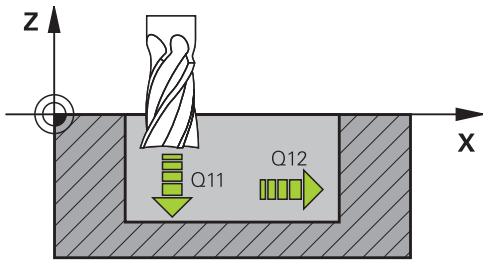

NC blocks

60 CYCL DEF 23 FLOOR FINISHING	
Q11=100	;FEED RATE FOR PLNGNG
Q12=350	;FEED RATE FOR MILLING
Q208=9999	;RETRACTION FEED RATE

7.8 SIDE FINISHING (Cycle 24, DIN/ISO: G124)

Cycle run

The subcontours are approached and departed on a tangential arc. Each subcontour is finished separately.

Please note while programming:

The sum of allowance for side (Q14) and the radius of the finish mill must be smaller than the sum of allowance for side (Q3, Cycle 20) and the radius of the rough mill.

This calculation also holds if you run Cycle 24 without having roughed out with Cycle 22; in this case, enter "0" for the radius of the rough mill.

You can use Cycle 24 also for contour milling. Then you must:

- define the contour to be milled as a single island (without pocket limit), and
- enter the finishing allowance (Q3) in Cycle 20 to be greater than the sum of the finishing allowance Q14 + radius of the tool being used.

The TNC automatically calculates the starting point for finishing. The starting point depends on the available space in the pocket and the allowance programmed in Cycle 20.

The starting point calculated by the TNC also depends on the machining sequence. If you select the finishing cycle with the GOTO key and then start the program, the starting point can be at a different location from where it would be if you execute the program in the defined sequence.

Danger of collision!

After executing an SL cycle you must program the first traverse motion in the working plane with both coordinate data, e.g. **L X+80 Y+0 R0 FMAX**.

Cycle parameters

- **Direction of rotation** Q9: Machining direction:
  +1: Rotation counterclockwise
  –1: Rotation clockwise
- **Plunging depth** Q10 (incremental): Infeed per cut. Input range -99999.9999 to 99999.9999
- **Feed rate for plunging** Q11: Traversing speed of the tool when plunging into the workpiece in mm/min. Input range 0 to 99999.9999 alternatively **FAUTO**, **FU**, **FZ**
- **Feed rate for milling** Q12: Traversing speed of the tool in the working plane. Input range 0 to 99999.9999, alternatively **FAUTO**, **FU**, **FZ**
- **Finishing allowance for side** Q14 (incremental): Enter the allowed material for several finish-milling operations. If you enter Q14 = 0, the remaining finishing allowance will be cleared. Input range -99999.9999 to 99999.9999

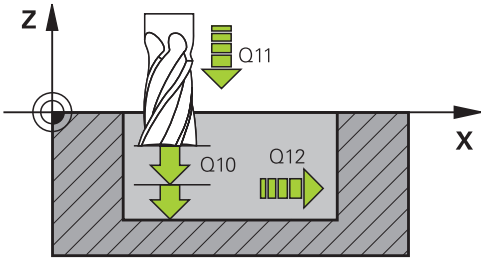

NC blocks

61 CYCL DEF 24 SIDE FINISHING	
Q9=+1	;DIRECTION OF ROTATION
Q10=+5	;PLUNGING DEPTH
Q11=100	;FEED RATE FOR PLNGNG
Q12=350	;FEED RATE FOR MILLING
Q14=+0	;ALLOWANCE FOR SIDE

7.9 CONTOUR TRAIN (Cycle 25, DIN/ISO: G125)

Cycle run

In conjunction with Cycle 14 CONTOUR GEOMETRY, this cycle facilitates the machining of open and closed contours.

Cycle 25 CONTOUR TRAIN offers considerable advantages over machining a contour using positioning blocks:

- The TNC monitors the operation to prevent undercuts and surface blemishes. It is recommended that you run a graphic simulation of the contour before execution.
- If the radius of the selected tool is too large, the corners of the contour may have to be reworked.
- The contour can be machined throughout by up-cut or by climb milling. The type of milling even remains effective when the contours are mirrored.
- The tool can traverse back and forth for milling in several infeeds: This results in faster machining.
- Allowance values can be entered in order to perform repeated rough-milling and finish-milling operations.

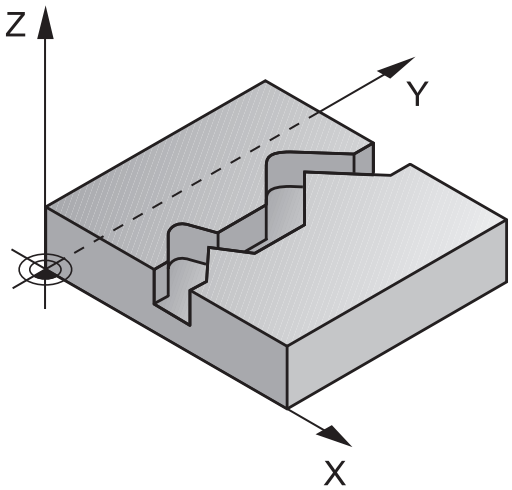

Please note while programming:

The algebraic sign for the cycle parameter DEPTH determines the working direction. If you program DEPTH=0, the cycle will not be executed.

The TNC takes only the first label of Cycle 14 CONTOUR GEOMETRY into account.

The memory capacity for programming an SL cycle is limited. You can program up to 16384 contour elements in one SL cycle.

Cycle 20 **CONTOUR DATA** is not required.

The miscellaneous functions **M109** and **M110** are not effective when machining a contour with Cycle 25.

When you use local **QL** Q parameters in a contour subprogram you must also assign or calculate these in the contour subprogram.

Danger of collision!

To avoid collisions,

- Do not program positions in incremental dimensions immediately after Cycle 25 since they are referenced to the position of the tool at the end of the cycle.
- Move the tool to defined (absolute) positions in all main axes, since the position of the tool at the end of the cycle is not identical to the position of the tool at the start of the cycle.

Cycle parameters

- **Milling depth** Q1 (incremental): Distance between workpiece surface and contour floor. Input range -99999.9999 to 99999.9999
- **Finishing allowance for side** Q3 (incremental): Finishing allowance in the working plane. Input range -99999.9999 to 99999.9999
- **Workpiece surface coordinate** Q5 (absolute): Absolute coordinate of the workpiece surface. Input range -99999.9999 to 99999.9999
- **Clearance height** Q7 (absolute): Absolute height at which the tool cannot collide with the workpiece (for intermediate positioning and retraction at the end of the cycle). Input range -99999.9999 to 99999.9999
- **Plunging depth** Q10 (incremental): Infeed per cut. Input range -99999.9999 to 99999.9999
- **Feed rate for plunging** Q11: Traversing speed of the tool in the spindle axis. Input range 0 to 99999.9999, alternatively **FAUTO**, **FU**, **FZ**
- **Feed rate for milling** Q12: Traversing speed of the tool in the working plane. Input range 0 to 99999.9999, alternatively **FAUTO**, **FU**, **FZ**
- **CLIMB OR UP-CUT** Q15:
  Climb milling: Input value = +1
  Conventional up-cut milling: Input value = –1
  Climb milling and up-cut milling alternately in several infeeds: Input value = 0

NC blocks

```
62 CYCL DEF 25 CONTOUR TRAIN
    Q1=-20      ;MILLING DEPTH
    Q3=+0       ;ALLOWANCE FOR SIDE
    Q5=+0       ;SURFACE COORDINATE
    Q7=+50      ;CLEARANCE HEIGHT
    Q10=+5      ;PLUNGING DEPTH
    Q11=100     ;FEED RATE FOR
                 PLNGNG
    Q12=350     ;FEED RATE FOR
                 MILLING
    Q15=-1      ;CLIMB OR UP-CUT
```

7.10 Programming Examples

Example: Roughing-out and fine-roughing a pocket

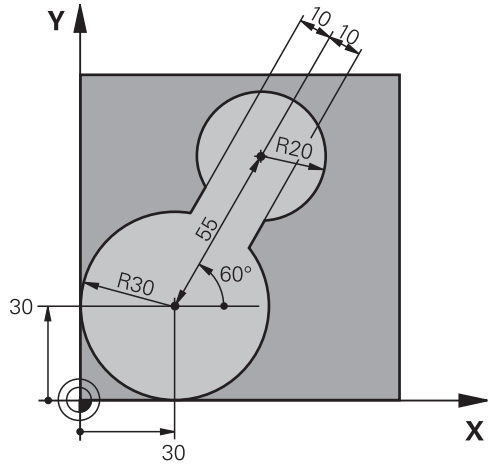

0 BEGIN PGM C20 MM	
1 BLK FORM 0.1 Z X-10 Y-10 Z-40	
2 BLK FORM 0.2 X+100 Y+100 Z+0	Definition of workpiece blank
3 TOOL CALL 1 Z S2500	Tool call: coarse roughing tool, diameter 30
4 L Z+250 R0 FMAX	Retract the tool
5 CYCL DEF 14.0 CONTOUR GEOMETRY	Define contour subprogram
6 CYCL DEF 14.1 CONTOUR LABEL 1	
7 CYCL DEF 20 CONTOUR DATA	Define general machining parameters
Q1=-20 ;MILLING DEPTH	
Q2=1 ;TOOL PATH OVERLAP	
Q3=+0 ;ALLOWANCE FOR SIDE	
Q4=+0 ;ALLOWANCE FOR FLOOR	
Q5=+0 ;SURFACE COORDINATE	
Q6=2 ;SET-UP CLEARANCE	
Q7=+100 ;CLEARANCE HEIGHT	
Q8=0.1 ;ROUNDING RADIUS	
Q9=-1 ;DIRECTION	
8 CYCL DEF 22 ROUGH-OUT	Cycle definition: Coarse roughing
Q10=5 ;PLUNGING DEPTH	
Q11=100 ;FEED RATE FOR PLNGNG	
Q12=350 ;FEED RATE FOR ROUGH-OUT	
Q18=0 ;COARSE ROUGHING TOOL	
Q19=150 ;RECIPROCATION FEED RATE	
Q208=30000 ;RETRACTION FEED RATE	
9 CYCL CALL M3	Cycle call: Coarse roughing
10 L Z+250 R0 FMAX M6	Tool change
11 TOOL CALL 2 Z S3000	Tool call: fine roughing tool, diameter 15

12 CYCL DEF 22 ROUGH-OUT	Define the fine roughing cycle
Q10=5 ;PLUNGING DEPTH	
Q11=100 ;FEED RATE FOR PLNGNG	
Q12=350 ;FEED RATE FOR ROUGH-OUT	
Q18=1 ;COARSE ROUGHING TOOL	
Q19=150 ;RECIPROCATION FEED RATE	
Q208=30000 ;RETRACTION FEED RATE	
13 CYCL CALL M3	Cycle call: Fine roughing
14 L Z+250 R0 FMAX M2	Retract in the tool axis, end program
15 LBL 1	Contour subprogram
16 L X+0 Y+30 RR	
17 FC DR- R30 CCX+30 CCY+30	
18 FL AN+60 PDX+30 PDY+30 D10	
19 FSELECT 3	
20 FPOL X+30 Y+30	
21 FC DR- R20 CCPR+55 CCPA+60	
22 FSELECT 2	
23 FL AN-120 PDX+30 PDY+30 D10	
24 FSELECT 3	
25 FC X+0 DR- R30 CCX+30 CCY+30	
26 FSELECT 2	
27 LBL 0	
28 END PGM C20 MM	

Example: Pilot drilling, roughing-out and finishing overlapping contours

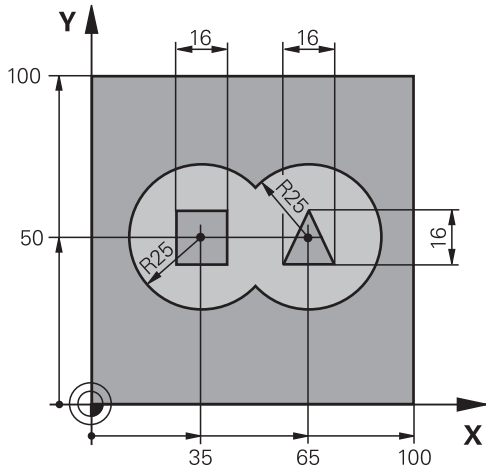

0 BEGIN PGM C21 MM	
1 BLK FORM 0.1 Z X+0 Y+0 Z-40	Definition of workpiece blank
2 BLK FORM 0.2 X+100 Y+100 Z+0	
3 TOOL CALL 1 Z S2500	Tool call: Drill, diameter 12
4 L Z+250 R0 FMAX	Retract the tool
5 CYCL DEF 14.0 CONTOUR GEOMETRY	Define contour subprogram
6 CYCL DEF 14.1 CONTOUR LABEL 1 /2 /3 /4	
7 CYCL DEF 20 CONTOUR DATA	Define general machining parameters
Q1=-20 ;MILLING DEPTH	
Q2=1 ;TOOL PATH OVERLAP	
Q3=+0.5 ;ALLOWANCE FOR SIDE	
Q4=+0.5 ;ALLOWANCE FOR FLOOR	
Q5=+0 ;SURFACE COORDINATE	
Q6=2 ;SET-UP CLEARANCE	
Q7=+100 ;CLEARANCE HEIGHT	
Q8=0.1 ;ROUNDING RADIUS	
Q9=-1 ;DIRECTION	
8 CYCL DEF 21 PILOT DRILLING	Cycle definition: Pilot drilling
Q10=5 ;PLUNGING DEPTH	
Q11=250 ;FEED RATE FOR PLNGNG	
Q13=2 ;ROUGH-OUT TOOL	
9 CYCL CALL M3	Cycle call: Pilot drilling
10 L +250 R0 FMAX M6	Tool change
11 TOOL CALL 2 Z S3000	Call the tool for roughing/finishing, diameter 12
12 CYCL DEF 22 ROUGH-OUT	Cycle definition: Rough-out
Q10=5 ;PLUNGING DEPTH	
Q11=100 ;FEED RATE FOR PLNGNG	
Q12=350 ;FEED RATE FOR ROUGH-OUT	

Q18=0 ;COARSE ROUGHING TOOL	
Q19=150 ;RECIPROCATION FEED RATE	
Q208=30000 ;RETRACTION FEED RATE	
13 CYCL CALL M3	Cycle call: Rough-out
14 CYCL DEF 23 FLOOR FINISHING	Cycle definition: Floor finishing
Q11=100 ;FEED RATE FOR PLNGNG	
Q12=200 ;FEED RATE FOR MILLING	
Q208=30000 ;RETRACTION FEED RATE	
15 CYCL CALL	Cycle call: Floor finishing
16 CYCL DEF 24 SIDE FINISHING	Cycle definition: Side finishing
Q9=+1 ;DIRECTION OF ROTATION	
Q10=5 ;PLUNGING DEPTH	
Q11=100 ;FEED RATE FOR PLNGNG	
Q12=400 ;FEED RATE FOR MILLING	
Q14=+0 ;ALLOWANCE FOR SIDE	
17 CYCL CALL	Cycle call: Side finishing
18 L Z+250 R0 FMAX M2	Retract the tool, end program
19 LBL 1	Contour subprogram 1: left pocket
20 CC X+35 Y+50	
21 L X+10 Y+50 RR	
22 C X+10 DR-	
23 LBL 0	
24 LBL 2	Contour subprogram 2: right pocket
25 CC X+65 Y+50	
26 L X+90 Y+50 RR	
27 C X+90 DR-	
28 LBL 0	
29 LBL 3	Contour subprogram 3: square left island
30 L X+27 Y+50 RL	
31 L Y+58	
32 L X+43	
33 L Y+42	
34 L X+27	
35 LBL 0	
36 LBL 4	Contour subprogram 4: triangular right island
37 L X+65 Y+42 RL	
38 L X+57	
39 L X+65 Y+58	
40 L X+73 Y+42	
41 LBL 0	
42 END PGM C21 MM	

Example: Contour train

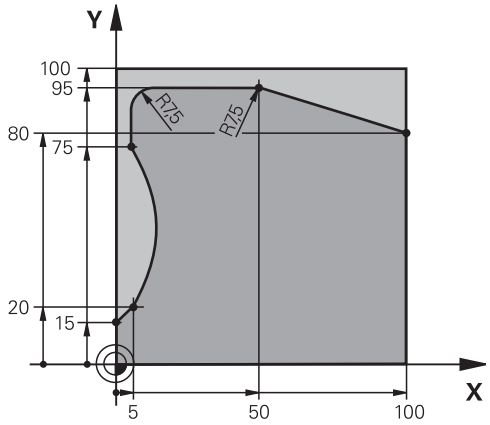

0 BEGIN PGM C25 MM	
1 BLK FORM 0.1 Z X+0 Y+0 Z-40	Definition of workpiece blank
2 BLK FORM 0.2 X+100 Y+100 Z+0	
3 TOOL CALL 1 Z S2000	Tool call: Diameter 20
4 L Z+250 R0 FMAX	Retract the tool
5 CYCL DEF 14.0 CONTOUR GEOMETRY	Define contour subprogram
6 CYCL DEF 14.1 CONTOUR LABEL 1	
7 CYCL DEF 25 CONTOUR TRAIN	Define machining parameters
Q1=-20 ;MILLING DEPTH	
Q3=+0 ;ALLOWANCE FOR SIDE	
Q5=+0 ;SURFACE COORDINATE	
Q7=+250 ;CLEARANCE HEIGHT	
Q10=5 ;PLUNGING DEPTH	
Q11=100 ;FEED RATE FOR PLNGNG	
Q12=200 ;FEED RATE FOR MILLING	
Q15=+1 ;CLIMB OR UP-CUT	
8 CYCL CALL M3	Cycle call
9 L Z+250 R0 FMAX M2	Retract the tool, end program
10 LBL 1	Contour subprogram
11 L X+0 Y+15 RL	
12 L X+5 Y+20	
13 CT X+5 Y+75	
14 L Y+95	
15 RND R7.5	
16 L X+50	
17 RND R7.5	
18 L X+100 Y+80	
19 LBL 0	
20 END PGM C25 MM	

8

Fixed Cycles: Cylindrical Surface

8.1 Fundamentals

Overview of cylindrical surface cycles

Cycle	Soft key	Page
27 CYLINDER SURFACE		179
28 CYLINDER SURFACE slot milling	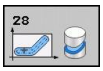	182
29 CYLINDER SURFACE ridge milling	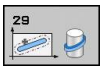	185

8.2 CYLINDER SURFACE (Cycle 27, DIN/ ISO: G127, software option 1)

Cycle call

This cycle enables you to program a contour in two dimensions and then roll it onto a cylindrical surface for 3-D machining. Use Cycle 28 if you want to mill guideways on the cylinder.

The contour is described in a subprogram identified in Cycle 14 CONTOUR GEOMETRY.

In the subprogram you always describe the contour with the coordinates X and Y, regardless of which rotary axes exist on your machine. This means that the contour description is independent of your machine configuration. The path functions **L**, **CHF**, **CR**, **RND** and **CT** are available.

The dimensions for the rotary axis (X coordinates) can be entered as desired either in degrees or in mm (or inches). Specify this with Q17 in the cycle definition.

1 The TNC positions the tool over the cutter infeed point, taking the allowance for side into account.
2 At the first plunging depth, the tool mills along the programmed contour at the milling feed rate Q12.
3 At the end of the contour, the TNC returns the tool to the set-up clearance and returns to the point of penetration.
4 Steps 1 to 3 are repeated until the programmed milling depth Q1 is reached.
5 Then the tool moves to the set-up clearance.

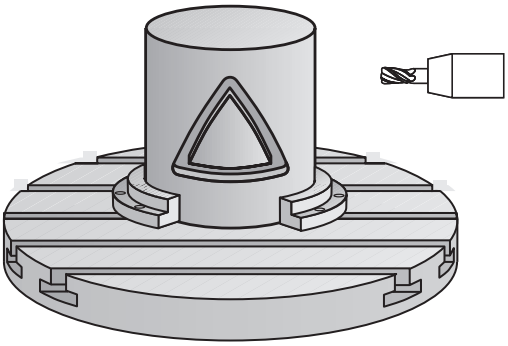

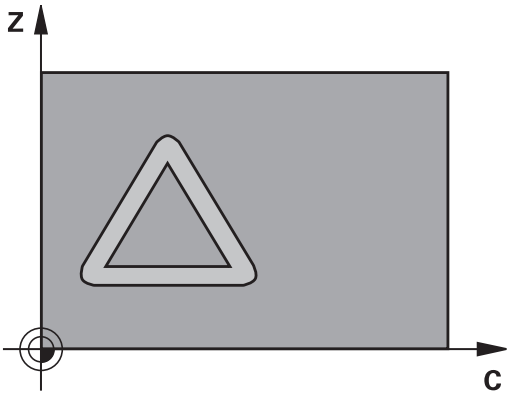

8.2 CYLINDER SURFACE (Cycle 27, DIN/ISO: G127, software option 1)

Please note while programming:

The machine and TNC must be prepared for cylinder surface interpolation by the machine tool builder.

Refer to your machine manual.

In the first NC block of the contour program, always program both cylinder surface coordinates.

The memory capacity for programming an SL cycle is limited. You can program up to 16384 contour elements in one SL cycle.

The algebraic sign for the cycle parameter DEPTH determines the working direction. If you program DEPTH=0, the cycle will not be executed.

This cycle requires a center-cut end mill (ISO 1641).

The cylinder must be set up centered on the rotary table. Set the reference point to the center of the rotary table.

The spindle axis must be perpendicular to the rotary table axis when the cycle is called; If this is not the case, the TNC will generate an error message. Switching of the kinematics may be required.

This cycle can also be used in a tilted working plane.

The set-up clearance must be greater than the tool radius.

The machining time can increase if the contour consists of many non-tangential contour elements.

When you use local **QL** Q parameters in a contour subprogram you must also assign or calculate these in the contour subprogram.

Cycle parameters

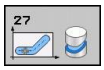

- **Milling depth** Q1 (incremental): Distance between the cylindrical surface and the floor of the contour. Input range -99999.9999 to 99999.9999
- **Finishing allowance for side** Q3 (incremental): Finishing allowance in the plane of the unrolled cylindrical surface. This allowance is effective in the direction of the radius compensation. Input range -99999.9999 to 99999.9999
- **Set-up clearance** Q6 (incremental): Distance between the tool tip and the cylinder surface. Input range 0 to 99999.9999
- **Plunging depth** Q10 (incremental): Infeed per cut. Input range -99999.9999 to 99999.9999
- **Feed rate for plunging** Q11: Traversing speed of the tool in the spindle axis. Input range 0 to 99999.9999, alternatively **FAUTO**, **FU**, **FZ**
- **Feed rate for milling** Q12: Traversing speed of the tool in the working plane. Input range 0 to 99999.9999, alternatively **FAUTO**, **FU**, **FZ**
- **Cylinder radius** Q16: Radius of the cylinder on which the contour is to be machined. Input range 0 to 99999.9999
- **Dimension type? deg=0 MM/INCH=1** Q17: The coordinates for the rotary axis of the subprogram are given either in degrees (0) or in mm/inches (1).

NC blocks

63 CYCL DEF 27 CYLINDER SURFACE	
Q1=-8	;MILLING DEPTH
Q3=+0	;ALLOWANCE FOR SIDE
Q6=+0	;SET-UP CLEARANCE
Q10=+3	;PLUNGING DEPTH
Q11=100	;FEED RATE FOR PLNGNG
Q12=350	;FEED RATE FOR MILLING
Q16=25	;RADIUS
Q17=0	;DIMENSION TYPE

8.3 CYLINDER SURFACE Slot milling (Cycle 28, DIN/ISO: G128, software option 1)

Cycle run

This cycle enables you to program a guide notch in two dimensions and then transfer it onto a cylindrical surface. Unlike Cycle 27, with this cycle the TNC adjusts the tool so that, with radius compensation active, the walls of the slot are nearly parallel. You can machine exactly parallel walls by using a tool that is exactly as wide as the slot.

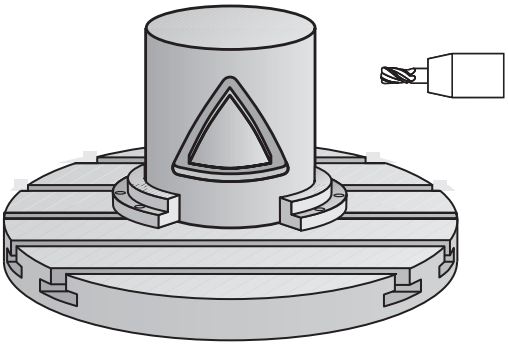

The smaller the tool is with respect to the slot width, the larger the distortion in circular arcs and oblique line segments. To minimize this process-related distortion, you can define in parameter Q21 a tolerance with which the TNC machines a slot as similar as possible to a slot machined with a tool of the same width as the slot.

Program the midpoint path of the contour together with the tool radius compensation. With the radius compensation you specify whether the TNC cuts the slot with climb milling or up-cut milling.

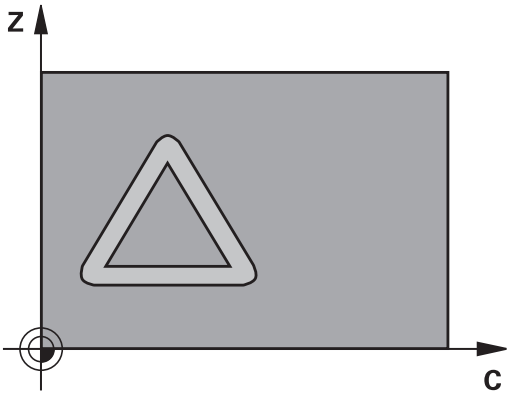

1 The TNC positions the tool over the cutter infeed point.
2 At the first plunging depth, the tool mills along the programmed slot wall at the milling feed rate Q12 while respecting the finishing allowance for the side.
3 At the end of the contour, the TNC moves the tool to the opposite wall and returns to the infeed point.
4 Steps 2 to 3 are repeated until the programmed milling depth Q1 is reached.
5 If you have defined the tolerance in Q21, the TNC then remachines the slot walls to be as parallel as possible.
6 Finally, the tool retracts in the tool axis to the clearance height or to the position last programmed before the cycle.

Please note while programming:

The machine and TNC must be prepared for cylinder surface interpolation by the machine tool builder.

Refer to your machine manual.

In the first NC block of the contour program, always program both cylinder surface coordinates.

The memory capacity for programming an SL cycle is limited. You can program up to 16384 contour elements in one SL cycle.

The algebraic sign for the cycle parameter DEPTH determines the working direction. If you program DEPTH=0, the cycle will not be executed.

This cycle requires a center-cut end mill (ISO 1641).

The cylinder must be set up centered on the rotary table. Set the reference point to the center of the rotary table.

The spindle axis must be perpendicular to the rotary table axis when the cycle is called; If this is not the case, the TNC will generate an error message. Switching of the kinematics may be required.

This cycle can also be used in a tilted working plane.

The set-up clearance must be greater than the tool radius.

The machining time can increase if the contour consists of many non-tangential contour elements.

When you use local **QL** Q parameters in a contour subprogram you must also assign or calculate these in the contour subprogram.

8.3 CYLINDER SURFACE Slot milling (Cycle 28, DIN/ISO: G128, software option 1)

Cycle parameters

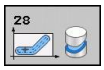

- **Milling depth** Q1 (incremental): Distance between the cylindrical surface and the floor of the contour. Input range -99999.9999 to 99999.9999
- **Finishing allowance for side** Q3 (incremental): Finishing allowance on the slot wall. The finishing allowance reduces the slot width by twice the entered value. Input range -99999.9999 to 99999.9999
- **Set-up clearance** Q6 (incremental): Distance between the tool tip and the cylinder surface. Input range 0 to 99999.9999
- **Plunging depth** Q10 (incremental): Infeed per cut. Input range -99999.9999 to 99999.9999
- **Feed rate for plunging** Q11: Traversing speed of the tool in the spindle axis. Input range 0 to 99999.9999, alternatively **FAUTO**, **FU**, **FZ**
- **Feed rate for milling** Q12: Traversing speed of the tool in the working plane. Input range 0 to 99999.9999, alternatively **FAUTO**, **FU**, **FZ**
- **Cylinder radius** Q16: Radius of the cylinder on which the contour is to be machined. Input range 0 to 99999.9999
- **Dimension type? deg=0 MM/INCH=1** Q17: The coordinates for the rotary axis of the subprogram are given either in degrees (0) or in mm/inches (1).
- **Slot width** Q20: Width of the slot to be machined. Input range -99999.9999 to 99999.9999
- **Tolerance** Q21: If you use a tool smaller than the programmed slot width Q20, process-related distortion occurs on the slot wall wherever the slot follows the path of an arc or oblique line. If you define the tolerance Q21, the TNC adds a subsequent milling operation to ensure that the slot dimensions are as close as possible to those of a slot that has been milled with a tool exactly as wide as the slot. With Q21 you define the permitted deviation from this ideal slot. The number of subsequent milling operations depends on the cylinder radius, the tool used, and the slot depth. The smaller the tolerance is defined, the more exact the slot is and the longer the remachining takes. Input range 0 to 9.9999
  Recommendation: Use a tolerance of 0.02 mm.
  Function inactive: Enter 0 (default setting)

NC blocks

63 CYCL DEF 28 CYLINDER SURFACE	
Q1=-8	;MILLING DEPTH
Q3=+0	;ALLOWANCE FOR SIDE
Q6=+0	;SET-UP CLEARANCE
Q10=+3	;PLUNGING DEPTH
Q11=100	;FEED RATE FOR PLNGNG
Q12=350	;FEED RATE FOR MILLING
Q16=25	;RADIUS
Q17=0	;DIMENSION TYPE
Q20=12	;SLOT WIDTH
Q21=0	;TOLERANCE

8.4 CYLINDER SURFACE Ridge milling (Cycle 29, DIN/ISO: G129, software option 1)

Cycle run

This cycle enables you to program a ridge in two dimensions and then transfer it onto a cylindrical surface. With this cycle the TNC adjusts the tool so that, with radius compensation active, the walls of the slot are always parallel. Program the midpoint path of the ridge together with the tool radius compensation. With the radius compensation you specify whether the TNC cuts the ridge with climb milling or up-cut milling.

At the ends of the ridge the TNC always adds a semicircle whose radius is half the ridge width.

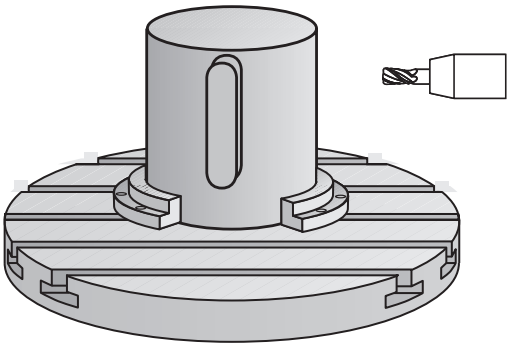

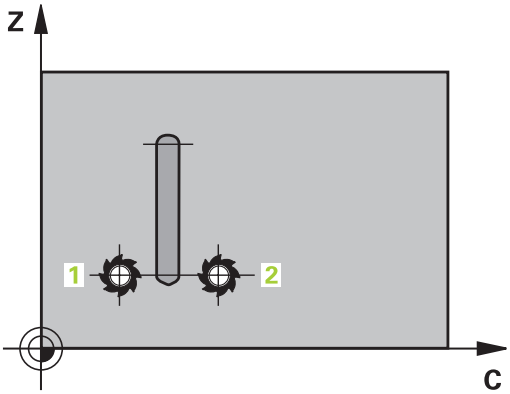

1 The TNC positions the tool over the starting point of machining. The TNC calculates the starting point from the ridge width and the tool diameter. It is located next to the first point defined in the contour subprogram, offset by half the ridge width and the tool diameter. The radius compensation determines whether machining begins from the left (1, RL = climb milling) or the right of the ridge (2, RR = up-cut milling).
2 After the TNC has positioned to the first plunging depth, the tool moves on a circular arc at the milling feed rate Q12 tangentially to the ridge wall. If so programmed, it will leave metal for the finishing allowance.
3 At the first plunging depth, the tool mills along the programmed ridge wall at the milling feed rate Q12 until the stud is completed.
4 The tool then departs the ridge wall on a tangential path and returns to the starting point of machining.
5 Steps 2 to 4 are repeated until the programmed milling depth Q1 is reached.
6 Finally, the tool retracts in the tool axis to the clearance height or to the position last programmed before the cycle.

8.4 CYLINDER SURFACE Ridge milling (Cycle 29, DIN/ISO: G129, software option 1)

Please note while programming:

The machine and TNC must be prepared for cylinder surface interpolation by the machine tool builder.

Refer to your machine manual.

In the first NC block of the contour program, always program both cylinder surface coordinates.

The memory capacity for programming an SL cycle is limited. You can program up to 16384 contour elements in one SL cycle.

The algebraic sign for the cycle parameter DEPTH determines the working direction. If you program DEPTH=0, the cycle will not be executed.

This cycle requires a center-cut end mill (ISO 1641).

The cylinder must be set up centered on the rotary table. Set the reference point to the center of the rotary table.

The spindle axis must be perpendicular to the rotary table axis when the cycle is called; If this is not the case, the TNC will generate an error message. Switching of the kinematics may be required.

This cycle can also be used in a tilted working plane.

The set-up clearance must be greater than the tool radius.

The machining time can increase if the contour consists of many non-tangential contour elements.

When you use local **QL** Q parameters in a contour subprogram you must also assign or calculate these in the contour subprogram.

Cycle parameters

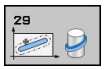

- **Milling depth** Q1 (incremental): Distance between the cylindrical surface and the floor of the contour. Input range -99999.9999 to 99999.9999
- **Finishing allowance for side** Q3 (incremental): Finishing allowance on the ridge wall. The finishing allowance increases the ridge width by twice the entered value. Input range -99999.9999 to 99999.9999
- **Set-up clearance** Q6 (incremental): Distance between the tool tip and the cylinder surface. Input range 0 to 99999.9999
- **Plunging depth** Q10 (incremental): Infeed per cut. Input range -99999.9999 to 99999.9999
- **Feed rate for plunging** Q11: Traversing speed of the tool in the spindle axis. Input range 0 to 99999.9999, alternatively **FAUTO**, **FU**, **FZ**
- **Feed rate for milling** Q12: Traversing speed of the tool in the working plane. Input range 0 to 99999.9999, alternatively **FAUTO**, **FU**, **FZ**
- **Cylinder radius** Q16: Radius of the cylinder on which the contour is to be machined. Input range 0 to 99999.9999
- **Dimension type? deg=0 MM/INCH=1** Q17: The coordinates for the rotary axis of the subprogram are given either in degrees (0) or in mm/inches (1).
- **Ridge width** Q20: Width of the ridge to be machined. Input range -99999.9999 to 99999.9999

NC blocks

63 CYCL DEF 29 CYLINDER SURFACE RIDGE	
Q1=-8	;MILLING DEPTH
Q3=+0	;ALLOWANCE FOR SIDE
Q6=+0	;SET-UP CLEARANCE
Q10=+3	;PLUNGING DEPTH
Q11=100	;FEED RATE FOR PLNGNG
Q12=350	;FEED RATE FOR MILLING
Q16=25	;RADIUS
Q17=0	;DIMENSION TYPE
Q20=12	;RIDGE WIDTH

8.5 Programming Examples

Example: Cylinder surface with Cycle 27

- Machine with B head and C table
- Cylinder centered on rotary table
- Datum is on the underside, in the center of the rotary table

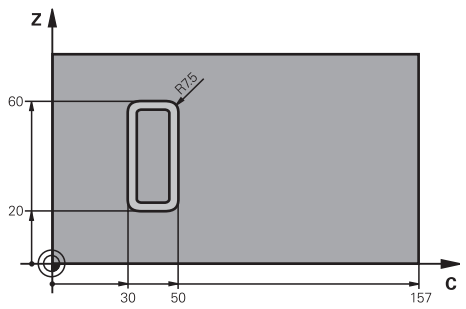

0 BEGIN PGM C27 MM	
1 TOOL CALL 1 Z S2000	Tool call: Diameter 7
2 L Z+250 R0 FMAX	Retract the tool
3 L X+50 Y0 R0 FMAX	Pre-position tool at rotary table center
4 PLANE SPATIAL SPA+0 SPB+90 SPC+0 TURN MBMAX FMAX	Positioning
5 CYCL DEF 14.0 CONTOUR GEOMETRY	Define contour subprogram
6 CYCL DEF 14.1 CONTOUR LABEL 1	
7 CYCL DEF 27 CYLINDER SURFACE	Define machining parameters
Q1=-7 ;MILLING DEPTH	
Q3=+0 ;ALLOWANCE FOR SIDE	
Q6=2 ;SET-UP CLEARANCE	
Q10=4 ;PLUNGING DEPTH	
Q11=100 ;FEED RATE FOR PLNGNG	
Q12=250 ;FEED RATE FOR MILLING	
Q16=25 ;RADIUS	
Q17=1 ;DIMENSION TYPE	
8 L C+0 R0 FMAX M13 M99	Pre-position rotary table, spindle ON, call the cycle
9 L Z+250 R0 FMAX	Retract the tool
10 PLANE RESET TURN FMAX	Tilt back, cancel the PLANE function
11 M2	End of program
12 LBL 1	Contour subprogram
13 L X+40 Y+20 RL	Data for the rotary axis are entered in mm (Q17=1)
14 L X+50	
15 RND R7.5	
16 L Y+60	
17 RND R7.5	
18 L IX-20	
19 RND R7.5	
20 L Y+20	
21 RND R7.5	

22 L X+50	
23 LBL 0	
24 END PGM C27 MM	

Example: Cylinder surface with Cycle 28

- Cylinder centered on rotary table
- Machine with B head and C table
- Datum at center of rotary table
- Description of the midpoint path in the contour subprogram

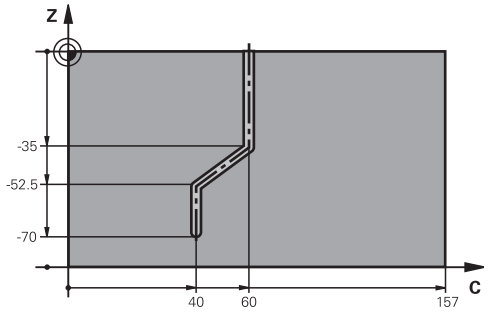

0 BEGIN PGM C28 MM	
1 TOOL CALL 1 Z S2000	Tool call, tool axis Z, diameter 7
2 L Z+250 R0 FMAX	Retract the tool
3 L X+50 Y+0 R0 FMAX	Position tool at rotary table center
4 PLANE SPATIAL SPA+0 SPB+90 SPC+0 TURN FMAX	Tilting
5 CYCL DEF 14.0 CONTOUR GEOMETRY	Define contour subprogram
6 CYCL DEF 14.1 CONTOUR LABEL 1	
7 CYCL DEF 28 CYLINDER SURFACE	Define machining parameters
Q1=-7 ;MILLING DEPTH	
Q3=+0 ;ALLOWANCE FOR SIDE	
Q6=2 ;SET-UP CLEARANCE	
Q10=-4 ;PLUNGING DEPTH	
Q11=100 ;FEED RATE FOR PLNGNG	
Q12=250 ;FEED RATE FOR MILLING	
Q16=25 ;RADIUS	
Q17=1 ;DIMENSION TYPE	
Q20=10 ;SLOT WIDTH	
Q21=0.02 ;TOLERANCE	Remachining active
8 L C+0 R0 FMAX M3 M99	Pre-position rotary table, spindle ON, call the cycle
9 L Z+250 R0 FMAX	Retract the tool
10 PLANE RESET TURN FMAX	Tilt back, cancel the PLANE function
11 M2	End of program
12 LBL 1	Contour subprogram, description of the midpoint path
13 L X+60 X+0 RL	Data for the rotary axis are entered in mm (Q17=1)
14 L Y-35	
15 L X+40 Y-52.5	
16 L Y-70	
17 LBL 0	
18 END PGM C28 MM	

9

Fixed Cycles: Contour Pocket with Contour Formula

9.1 SL cycles with complex contour formula

Fundamentals

SL cycles and the complex contour formula enable you to form complex contours by combining subcontours (pockets or islands). You define the individual subcontours (geometry data) as separate programs. In this way, any subcontour can be used any number of times. The TNC calculates the complete contour from the selected subcontours, which you link together through a contour formula.

The memory capacity for programming an SL cycle (all contour description programs) is limited to **128 contours.** The number of possible contour elements depends on the type of contour (inside or outside contour) and the number of contour descriptions. You can program up to **16384** elements.

The SL cycles with contour formula presuppose a structured program layout and enable you to save frequently used contours in individual programs. Using the contour formula, you can connect the subcontours to a complete contour and define whether it applies to a pocket or island.

In its present form, the "SL cycles with contour formula" function requires input from several areas in the TNC's user interface. This function is to serve as a basis for further development.

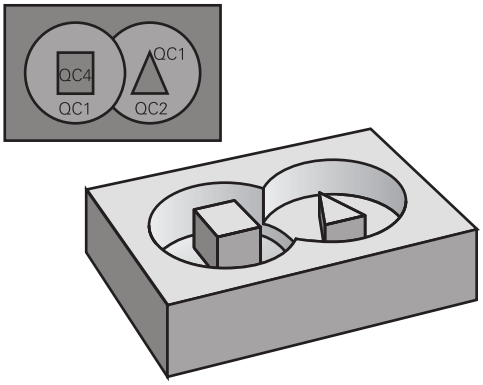

Program structure: Machining with SL cycles and complex contour formula

```
0 BEGIN PGM CONTOUR MM
...
5 SEL CONTOUR "MODEL"
6 CYCL DEF 20 CONTOUR DATA...
8 CYCL DEF 22 ROUGH-OUT...
9 CYCL CALL
...
12 CYCL DEF 23 FLOOR FINISHING...
13 CYCL CALL
...
16 CYCL DEF 24 SIDE FINISHING...
17 CYCL CALL
63 L Z+250 R0 FMAX M2
64 END PGM CONTOUR MM
```

Properties of the subcontours

- By default, the TNC assumes that the contour is a pocket. Do not program a radius compensation.
- The TNC ignores feed rates F and miscellaneous functions M.
- Coordinate transformations are allowed. If they are programmed within the subcontour they are also effective in the following subprograms, but they need not be reset after the cycle call.
- Although the subprograms can contain coordinates in the spindle axis, such coordinates are ignored.
- The working plane is defined in the first coordinate block of the subprogram.
- You can define subcontours with various depths as needed

Characteristics of the fixed cycles

- The TNC automatically positions the tool to the set-up clearance before a cycle.
- Each level of infeed depth is milled without interruptions since the cutter traverses around islands instead of over them.
- The radius of "inside corners" can be programmed—the tool keeps moving to prevent surface blemishes at inside corners (this applies to the outermost pass in the Rough-out and Side Finishing cycles).
- The contour is approached in a tangential arc for side finishing.
- For floor finishing, the tool again approaches the workpiece on a tangential arc (for spindle axis Z, for example, the arc may be in the Z/X plane).
- The contour is machined throughout in either climb or up-cut milling.

The machining data (such as milling depth, finishing allowance and set-up clearance) are entered as CONTOUR DATA in Cycle 20.

Program structure: Calculation of the subcontours with contour formula

```
0 BEGIN PGM MODEL MM
1 DECLARE CONTOUR QC1 = "CIRCLE1"
2 DECLARE CONTOUR QC2 =
"CIRCLEXY" DEPTH15
3 DECLARE CONTOUR QC3 =
"TRIANGLE" DEPTH10
4 DECLARE CONTOUR QC4 = "SQUARE"
DEPTH5
5 QC10 = ( QC1 | QC3 | QC4 ) \ QC2
6 END PGM MODEL MM

0 BEGIN PGM CIRCLE 1 MM
1 CC X+75 Y+50
2 LP PR+45 PA+0
3 CP IPA+360 DR+
4 END PGM CIRCLE 1 MM

0 BEGIN PGM CIRCLE31XY MM
...
...
```

Selecting a program with contour definitions

With the **SEL CONTOUR** function you select a program with contour definitions, from which the TNC takes the contour descriptions:

SPEC FCT
- Show the soft-key row with special functions

CONTOUR + POINT MACHINING
- Select the menu for functions for contour and point machining

SEL CONTOUR
- Press the SEL CONTOUR soft key.
- Enter the full name of the program with the contour definition and confirm with the END key.

> Program a **SEL CONTOUR** block before the SL cycles. Cycle **14 CONTOUR GEOMETRY** is no longer necessary if you use **SEL CONTOUR**.

Defining contour descriptions

With the **DECLARE CONTOUR** function you enter in a program the path for programs from which the TNC draws the contour descriptions. In addition, you can select a separate depth for this contour description (FCL 2 function):

SPEC FCT
- Show the soft-key row with special functions

CONTOUR + POINT MACHINING
- Select the menu for functions for contour and point machining

DECLARE CONTOUR
- Press the DECLARE CONTOUR soft key.
- Enter the number for the contour designator **QC,** and confirm with the ENT key.
- Enter the full name of the program with the contour description and confirm with the END key, or if desired,
- Define a separate depth for the selected contour.

> With the entered contour designators **QC** you can include the various contours in the contour formula.
> If you program separate depths for contours, then you must assign a depth to all subcontours (assign the depth 0 if necessary).

Entering a complex contour formula

You can use soft keys to interlink various contours in a mathematical formula.

SPEC FCT

- Show the soft-key row with special functions

CONTOUR + POINT MACHINING

- Select the menu for functions for contour and point machining

CONTOUR FORMULA

- Press the CONTOUR FORMULA soft key. The TNC then displays the following soft keys:

Mathematical function	Soft key
cut with e.g. **QC10 = QC1 & QC5**	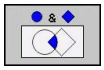
joined with e.g. **QC25 = QC7 | QC18**	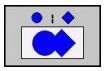
joined with, but without cut e.g. **QC12 = QC5 ^ QC25**	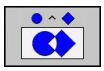
without e.g. **QC25 = QC1 \ QC2**	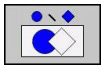
Parenthesis open e.g. **QC12 = QC1 * (QC2 + QC3)**	(
Parenthesis closed e.g. **QC12 = QC1 * (QC2 + QC3)**	)
Define single contour e.g. **QC12 = QC1**	

Superimposed contours

By default, the TNC considers a programmed contour to be a pocket. With the functions of the contour formula, you can convert a contour from a pocket to an island.

Pockets and islands can be overlapped to form a new contour. You can thus enlarge the area of a pocket by another pocket or reduce it by an island.

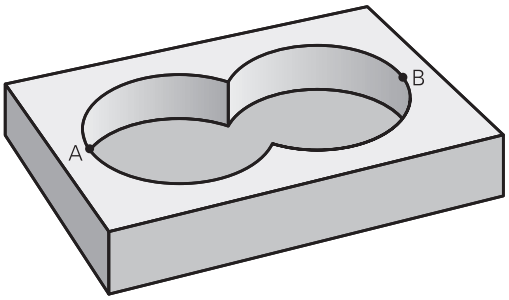

Subprograms: overlapping pockets

> The following programming examples are contour description programs that are defined in a contour definition program. The contour definition program is called through the **SEL CONTOUR** function in the actual main program.

Pockets A and B overlap.

The TNC calculates the points of intersection S1 and S2 (they do not have to be programmed).

The pockets are programmed as full circles.

Contour description program 1: pocket A

```
0 BEGIN PGM POCKET_A MM
1 L X+10 Y+50 R0
2 CC X+35 Y+50
3 C X+10 Y+50 DR-
4 END PGM POCKET_A MM
```

Contour description program 2: pocket B

```
0 BEGIN PGM POCKET_B MM
1 L X+90 Y+50 R0
2 CC X+65 Y+50
3 C X+90 Y+50 DR-
4 END PGM POCKET_B MM
```

Area of inclusion

Both areas A and B are to be machined, including the overlapping area:

- The areas A and B must be entered in separate programs without radius compensation.
- In the contour formula, the areas A and B are processed with the "joined with" function.

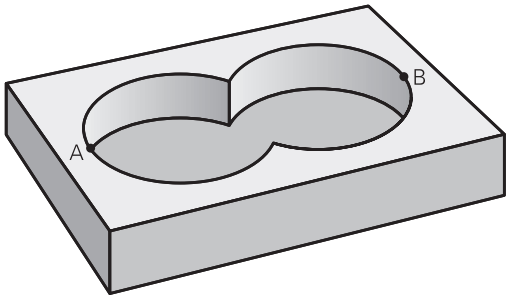

Contour definition program:

```
50 ...
51 ...
52 DECLARE CONTOUR QC1 = "POCKET_A.H"
53 DECLARE CONTOUR QC2 = "POCKET_B.H"
54 QC10 = QC1 | QC2
55 ...
56 ...
```

Area of exclusion

Area A is to be machined without the portion overlapped by B:

- The areas A and B must be entered in separate programs without radius compensation.
- In the contour formula, the area B is subtracted from the area A with the **without** function.

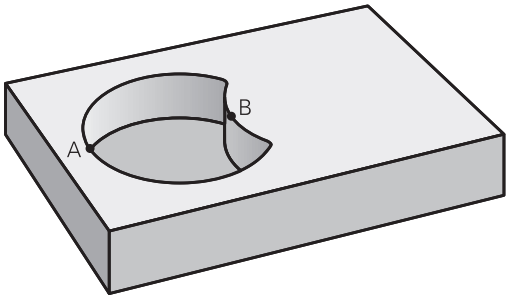

Contour definition program:

```
50 ...
51 ...
52 DECLARE CONTOUR QC1 = "POCKET_A.H"
53 DECLARE CONTOUR QC2 = "POCKET_B.H"
54 QC10 = QC1 \ QC2
55 ...
56 ...
```

Area of intersection

Only the area where A and B overlap is to be machined. (The areas covered by A or B alone are to be left unmachined.)

- The areas A and B must be entered in separate programs without radius compensation.
- In the contour formula, the areas A and B are processed with the "intersection with" function.

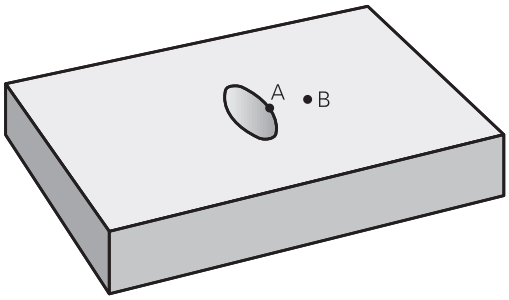

Contour definition program:

```
50 ...
51 ...
52 DECLARE CONTOUR QC1 = "POCKET_A.H"
53 DECLARE CONTOUR QC2 = "POCKET_B.H"
54 QC10 = QC1 & QC2
55 ...
56 ...
```

Contour machining with SL Cycles

The complete contour is machined with the SL Cycles 20 to 24 (See "Overview", page 155).

Example: Roughing and finishing superimposed contours with the contour formula

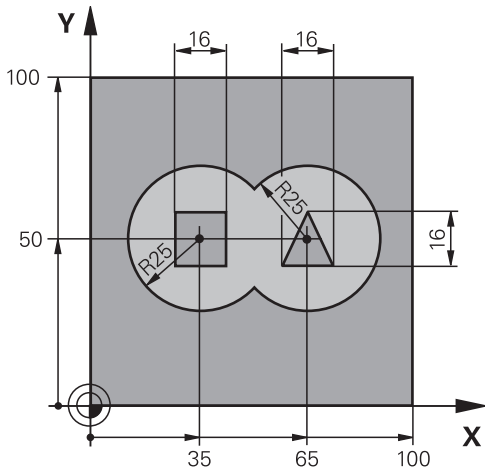

0 BEGIN PGM CONTOUR MM		
1 BLK FORM 0.1 Z X+0 Y+0 Z-40		Definition of workpiece blank
2 BLK FORM 0.2 X+100 Y+100 Z+0		
3 TOOL DEF 1 L+0 R+2.5		Tool definition of roughing cutter
4 TOOL DEF 2 L+0 R+3		Tool definition of finishing cutter
5 TOOL CALL 1 Z S2500		Tool call of roughing cutter
6 L Z+250 R0 FMAX		Retract the tool
7 SEL CONTOUR "MODEL"		Specify contour definition program
8 CYCL DEF 20 CONTOUR DATA		Define general machining parameters
Q1=-20	;MILLING DEPTH	
Q2=1	;TOOL PATH OVERLAP	
Q3=+0.5	;ALLOWANCE FOR SIDE	
Q4=+0.5	;ALLOWANCE FOR FLOOR	
Q5=+0	;SURFACE COORDINATE	
Q6=2	;SET-UP CLEARANCE	
Q7=+100	;CLEARANCE HEIGHT	
Q8=0.1	;ROUNDING RADIUS	
Q9=-1	;DIRECTION	

9 CYCL DEF 22 ROUGH-OUT	Cycle definition: Rough-out
Q10=5 ;PLUNGING DEPTH	
Q11=100 ;FEED RATE FOR PLNGNG	
Q12=350 ;FEED RATE FOR MILLING	
Q18=0 ;COARSE ROUGHING TOOL	
Q19=150 ;RECIPROCATION FEED RATE	
Q401=100 ;FEED RATE FACTOR	
Q404=0 ;FINE ROUGH STRATEGY	
10 CYCL CALL M3	Cycle call: Rough-out
11 TOOL CALL 2 Z S5000	Tool call of finishing cutter
12 CYCL DEF 23 FLOOR FINISHING	Cycle definition: Floor finishing
Q11=100 ;FEED RATE FOR PLNGNG	
Q12=200 ;FEED RATE FOR MILLING	
13 CYCL CALL M3	Cycle call: Floor finishing
14 CYCL DEF 24 SIDE FINISHING	Cycle definition: Side finishing
Q9=+1 ;DIRECTION OF ROTATION	
Q10=5 ;PLUNGING DEPTH	
Q11=100 ;FEED RATE FOR PLNGNG	
Q12=400 ;FEED RATE FOR MILLING	
Q14=+0 ;ALLOWANCE FOR SIDE	
15 CYCL CALL M3	Cycle call: Side finishing
16 L Z+250 R0 FMAX M2	Retract in the tool axis, end program
17 END PGM CONTOUR MM	

Contour definition program with contour formula:

0 BEGIN PGM MODEL MM	Contour definition program
1 DECLARE CONTOUR QC1 = "CIRCLE1"	Definition of the contour designator for the program "CIRCLE1"
2 FN 0: Q1 =+35	Assignment of values for parameters used in PGM "CIRCLE31XY"
3 FN 0: Q2 =+50	
4 FN 0: Q3 =+25	
5 DECLARE CONTOUR QC2 = "CIRCLE31XY"	Definition of the contour designator for the program "CIRCLE31XY"
6 DECLARE CONTOUR QC3 = "TRIANGLE"	Definition of the contour designator for the program "TRIANGLE"
7 DECLARE CONTOUR QC4 = "SQUARE"	Definition of the contour designator for the program "SQUARE"
8 QC10 = (QC 1 | QC 2) \ QC 3 \ QC 4	Contour formula
9 END PGM MODEL MM	

Contour description programs:

0 BEGIN PGM CIRCLE 1 MM	Contour description program: circle at right
1 CC X+65 Y+50	
2 L PR+25 PA+0 R0	
3 CP IPA+360 DR+	
4 END PGM CIRCLE 1 MM	

0 BEGIN PGM CIRCLE31XY MM	Contour description program: circle at left
1 CC X+Q1 Y+Q2	
2 LP PR+Q3 PA+0 R0	
3 CP IPA+360 DR+	
4 END PGM CIRCLE31XY MM	

0 BEGIN PGM TRIANGLE MM	Contour description program: triangle at right
1 L X+73 Y+42 R0	
2 L X+65 Y+58	
3 L X+58 Y+42	
4 L X+73	
5 END PGM TRIANGLE MM	

0 BEGIN PGM SQUARE MM	Contour description program: square at left
1 L X+27 Y+58 R0	
2 L X+43	
3 L Y+42	
4 L X+27	
5 L Y+58	
6 END PGM SQUARE MM	

9.2 SL cycles with simple contour formula

Fundamentals

SL cycles and the simple contour formula enable you to form contours by combining up to 9 subcontours (pockets or islands) in a simple manner. You define the individual subcontours (geometry data) as separate programs. In this way, any subcontour can be used any number of times. The TNC calculates the contour from the selected subcontours.

> The memory capacity for programming an SL cycle (all contour description programs) is limited to **128 contours.** The number of possible contour elements depends on the type of contour (inside or outside contour) and the number of contour descriptions. You can program up to **16384** elements.

Program structure: Machining with SL cycles and complex contour formula

```
0 BEGIN PGM CONTDEF MM
...
5 CONTOUR DEF P1= "POCK1.H" I2
= "ISLE2.H" DEPTH5 I3 "ISLE3.H"
DEPTH7.5
6 CYCL DEF 20 CONTOUR DATA...
8 CYCL DEF 22 ROUGH-OUT...
9 CYCL CALL
...
12 CYCL DEF 23 FLOOR FINISHING...
13 CYCL CALL
...
16 CYCL DEF 24 SIDE FINISHING...
17 CYCL CALL
63 L Z+250 R0 FMAX M2
64 END PGM CONTDEF MM
```

Properties of the subcontours

- Do not program a radius compensation.
- The TNC ignores feed rates F and miscellaneous functions M.
- Coordinate transformations are allowed. If they are programmed within the subcontour they are also effective in the following subprograms, but they need not be reset after the cycle call.
- Although the subprograms can contain coordinates in the spindle axis, such coordinates are ignored.
- The working plane is defined in the first coordinate block of the subprogram.

Characteristics of the fixed cycles

- The TNC automatically positions the tool to the set-up clearance before a cycle.
- Each level of infeed depth is milled without interruptions since the cutter traverses around islands instead of over them.
- The radius of "inside corners" can be programmed—the tool keeps moving to prevent surface blemishes at inside corners (this applies to the outermost pass in the Rough-out and Side Finishing cycles).
- The contour is approached in a tangential arc for side finishing.
- For floor finishing, the tool again approaches the workpiece on a tangential arc (for spindle axis Z, for example, the arc may be in the Z/X plane).
- The contour is machined throughout in either climb or up-cut milling.

The machining data (such as milling depth, finishing allowance and set-up clearance) are entered as CONTOUR DATA in Cycle 20.

Entering a simple contour formula

You can use soft keys to interlink various contours in a mathematical formula.

SPEC FCT

- Show the soft-key row with special functions

CONTOUR + POINT MACHINING

- Select the menu for functions for contour and point machining

CONTOUR DEF

- Press the CONTOUR DEF soft key. The TNC opens the dialog for entering the contour formula.
- Enter the name of the first subcontour. The first subcontour must always be the deepest pocket. Confirm with the ENT key.

ISLAND

- Specify via soft key whether the next subcontour is a pocket or an island. Confirm with the ENT key.
- Enter the name of the second subcontour. Confirm with the ENT key.
- If needed, enter the depth of the second subcontour. Confirm with the ENT key.
- Carry on with the dialog as described above until you have entered all subcontours.

Always start the list of subcontours with the deepest pocket!

If the contour is defined as an island, the TNC interprets the entered depth as the island height. The entered value (without an algebraic sign) then refers to the workpiece top surface!

If the depth is entered as 0, then for pockets the depth defined in the Cycle 20 is effective. Islands then rise up to the workpiece top surface!

Contour machining with SL Cycles

The complete contour is machined with the SL Cycles 20 to 24 (See "Overview").

10

Fixed Cycles: Multipass Milling

10.1 Fundamentals

Overview

The TNC offers three cycles for machining surfaces with the following characteristics:

- Flat, rectangular surfaces
- Flat, oblique-angled surfaces
- Surfaces that are inclined in any way
- Twisted surfaces

Cycle	Soft key	Page
230 MULTIPASS MILLING For flat rectangular surfaces	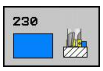	207
231 RULED SURFACE For oblique, inclined or twisted surfaces	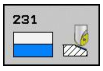	209
232 FACE MILLING For level rectangular surfaces, with indicated oversizes and multiple infeeds	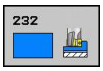	213

10.2 MULTIPASS MILLING (Cycle 230, DIN/ISO: G230)

Cycle run

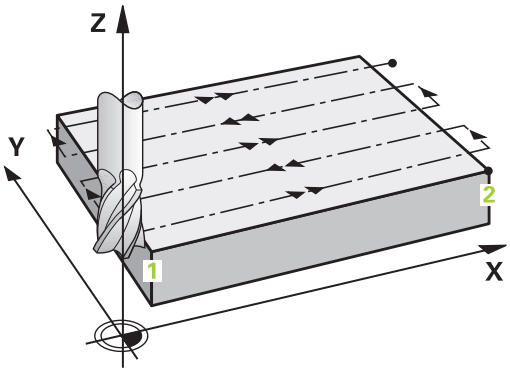

1 From the current position in the working plane, the TNC positions the tool in rapid traverse **FMAX** to the starting point 1; the TNC moves the tool by its radius to the left and upward.
2 The tool then moves in at **FMAX** in the spindle axis to set-up clearance. From there it approaches the programmed starting position in the spindle axis at the feed rate for plunging.
3 The tool then moves as the programmed feed rate for milling to the end point2. The TNC calculates the end point from the programmed starting point, the programmed length, and the tool radius.
4 The TNC offsets the tool to the starting point in the next pass at the stepover feed rate. The offset is calculated from the programmed width and the number of cuts.
5 The tool then returns in the negative direction of the first axis.
6 Multipass milling is repeated until the programmed surface has been completed.
7 At the end of the cycle, the tool is retracted in **FMAX** to set-up clearance.

Please note while programming:

From the current position, the TNC positions the tool at the starting point, first in the working plane and then in the spindle axis.

Pre-position the tool in such a way that no collision between tool and fixtures can occur.

Cycle parameters

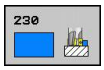

- **Starting point in 1st axis** Q225 (absolute): Starting point coordinate of the surface to be machined in the reference axis of the working plane. Input range -99999.9999 to 99999.9999
- **Starting point in 2nd axis** Q226 (absolute): Starting point coordinate of the surface to be machined in the minor axis of the working plane. Input range -99999.9999 to 99999.9999
- **Starting point in 3rd axis** Q227 (absolute): Height in the spindle axis at which multipass-milling is carried out. Input range -99999.9999 to 99999.9999
- **1st side length** Q218 (incremental): Length of the surface to be multipass-milled in the reference axis of the working plane, referenced to the starting point in the 1st axis. Input range 0 to 99999.9999
- **2nd side length** Q219 (incremental): Length of the surface to be multipass-milled in the minor axis of the working plane, referenced to the starting point in the 2nd axis. Input range 0 to 99999.9999
- **Number of cuts** Q240: Number of passes to be made over the width. Input range 0 to 99999
- **Feed rate for plunging** Q206: Traversing speed of the tool while moving to depth in mm/min. Input range 0 to 99999.999; alternatively **FAUTO**, **FU**, **FZ**
- **Feed rate for milling** Q207: Traversing speed of the tool in mm/min while milling. Input range 0 to 99999.999 alternatively **FAUTO**, **FU**, **FZ**
- **Stepover feed rate** Q209: Traversing speed of the tool in mm/min when moving to the next pass. If you are moving the tool transversely in the material, enter Q209 to be smaller than Q207. If you are moving it transversely in the open, Q209 may be greater than Q207. Input range 0 to 99999.9999, alternatively **FAUTO**, **FU**, **FZ**
- **Set-up clearance** Q200 (incremental): Distance between tool tip and milling depth for positioning at the start and end of the cycle. Input range 0 to 99999.9999

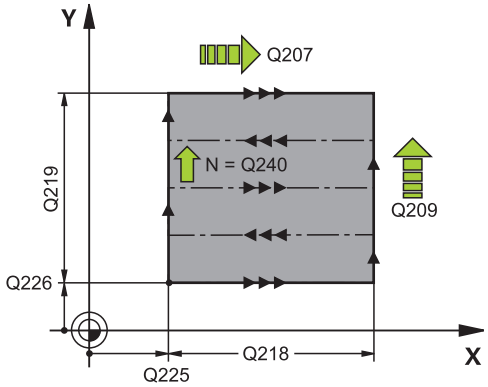

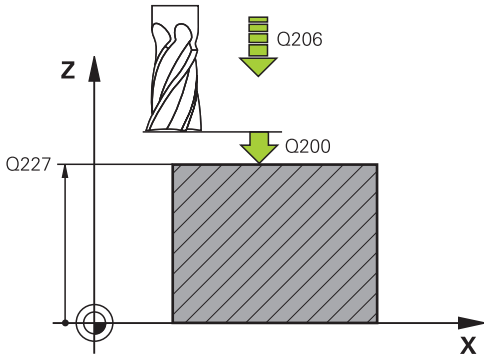

NC blocks

71 CYCL DEF 230 MULTIPASS MILLING	
Q225=+10	;STARTNG PNT 1ST AXIS
Q226=+12	;STARTNG PNT 2ND AXIS
Q227=+2.5	;STARTNG PNT 3RD AXIS
Q218=150	;FIRST SIDE LENGTH
Q219=75	;2ND SIDE LENGTH
Q240=25	;NUMBER OF CUTS
Q206=150	;FEED RATE FOR PLNGNG
Q207=500	;FEED RATE FOR MILLING
Q209=200	;STEPOVER FEED RATE
Q200=2	;SET-UP CLEARANCE

10.3 RULED SURFACE (Cycle 231, DIN/ISO: G231)

Cycle run

1 From the current position, the TNC positions the tool in a linear 3-D movement to the starting point **1**.
2 The tool subsequently advances to the stopping point **2** at the feed rate for milling.
3 From this point, the tool moves at rapid traverse **FMAX** by the tool diameter in the positive tool axis direction, and then back to starting point **1**.
4 At the starting point **1** the TNC moves the tool back to the last traversed Z value.
5 Then the TNC moves the tool in all three axes from point **1** in the direction of point **4** to the next line.
6 From this point, the tool moves to the stopping point on this pass. The TNC calculates the end point from point **2** and a movement in the direction of point **3**.
7 Multipass milling is repeated until the programmed surface has been completed.
8 At the end of the cycle, the tool is positioned above the highest programmed point in the spindle axis, offset by the tool diameter.

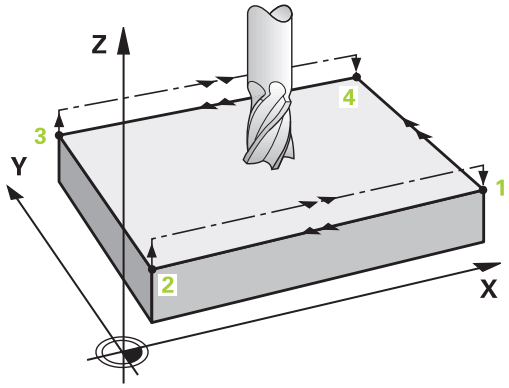

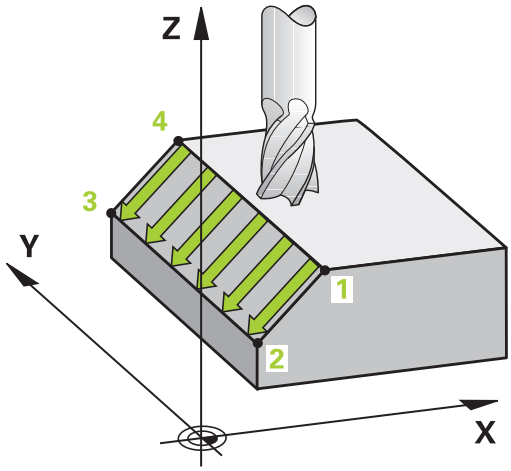

Cutting motion

The starting point, and therefore the milling direction, is selectable because the TNC always moves from point 1 to point 2 and in the total movement from point 1 / 2 to point 3 / 4. You can program point 1 at any corner of the surface to be machined.

If you are using an end mill for the machining operation, you can optimize the surface finish in the following ways:

- A shaping cut (spindle axis coordinate of point 1 greater than spindle-axis coordinate of point 2) for slightly inclined surfaces.
- A drawing cut (spindle axis coordinate of point 1 smaller than spindle-axis coordinate of point 2) for steep surfaces.
- When milling twisted surfaces, program the main cutting direction (from point 1 to point 2) parallel to the direction of the steeper inclination.

If you are using a spherical cutter for the machining operation, you can optimize the surface finish in the following way:

- When milling twisted surfaces, program the main cutting direction (from point 1 to point 2) perpendicular to the direction of the steepest inclination.

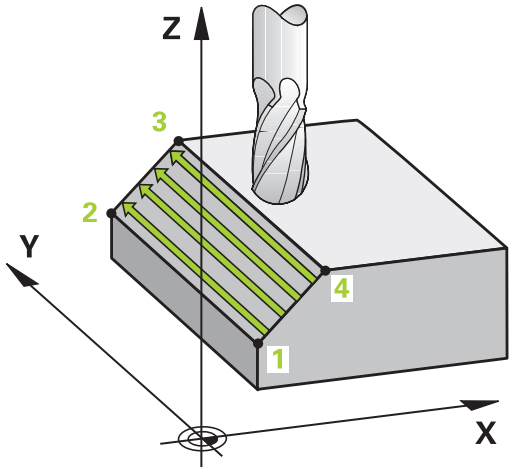

Please note while programming:

From the current position, the TNC positions the tool in a linear 3-D movement to the starting point 1. Pre-position the tool in such a way that no collision between tool and fixtures can occur.

The TNC moves the tool with radius compensation **R0** to the programmed positions.

This cycle requires a center-cut end mill (ISO 1641) or pilot drilling with Cycle 21.

Cycle parameters

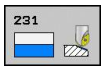

- **Starting point in 1st axis** Q225 (absolute): Starting point coordinate of the surface to be machined in the reference axis of the working plane. Input range -99999.9999 to 99999.9999
- **Starting point in 2nd axis** Q226 (absolute): Starting point coordinate of the surface to be machined in the minor axis of the working plane. Input range -99999.9999 to 99999.9999
- **Starting point in 3rd axis** Q227 (absolute): Starting point coordinate of the surface to be multipass-milled in the tool axis. Input range -99999.9999 to 99999.9999
- **2nd point in 1st axis** Q228 (absolute): End point coordinate of the surface to be multipass milled in the reference axis of the working plane. Input range -99999.9999 to 99999.9999
- **2nd point in 2nd axis** Q229 (absolute): End point coordinate of the surface to be multipass milled in the minor axis of the working plane. Input range -99999.9999 to 99999.9999
- **2nd point in 3rd axis** Q230 (absolute): End point coordinate of the surface to be multipass milled in the spindle axis. Input range -99999.9999 to 99999.9999
- **3rd point in 1st axis** Q231 (absolute): Coordinate of point 3 in the reference axis of the working plane. Input range -99999.9999 to 99999.9999
- **3rd point in 2nd axis** Q232 (absolute): Coordinate of point 3 in the minor axis of the working plane. Input range -99999.9999 to 99999.9999
- **3rd point in 3rd axis** Q233 (absolute): Coordinate of point 3 in the spindle axis. Input range -99999.9999 to 99999.9999
- **4th point in 1st axis** Q234 (absolute): Coordinate of point 4 in the reference axis of the working plane. Input range -99999.9999 to 99999.9999
- **4th point in 2nd axis** Q235 (absolute): Coordinate of point 4 in the minor axis of the working plane. Input range -99999.9999 to 99999.9999

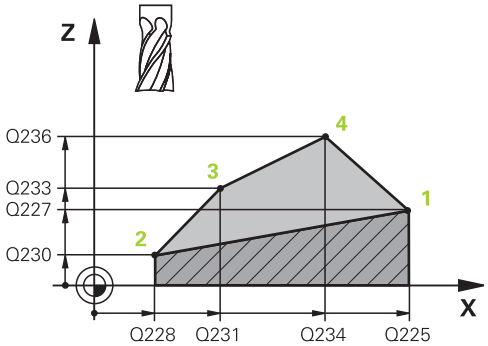

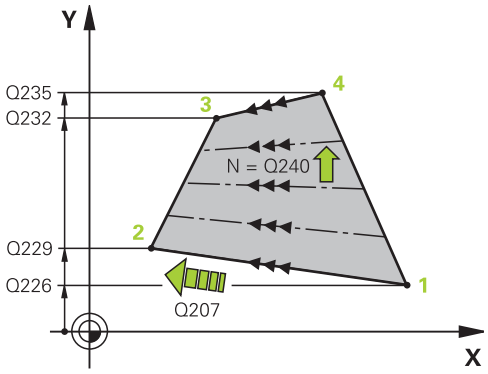

NC blocks

72 CYCL DEF 231 RULED SURFACE	
Q225=+0	;STARTNG PNT 1ST AXIS
Q226=+5	;STARTNG PNT 2ND AXIS
Q227=-2	;STARTNG PNT 3RD AXIS
Q228=+100	;2ND POINT 1ST AXIS
Q229=+15	;2ND POINT 2ND AXIS
Q230=+5	;2ND POINT 3RD AXIS
Q231=+15	;3RD POINT 1ST AXIS
Q232=+125	;3RD POINT 2ND AXIS
Q233=+25	;3RD POINT 3RD AXIS
Q234=+15	;4TH POINT 1ST AXIS
Q235=+125	;4TH POINT 2ND AXIS
Q236=+25	;4TH POINT 3RD AXIS
Q240=40	;NUMBER OF CUTS
Q207=500	;FEED RATE FOR MILLING

- **4th point in 3rd axis** Q236 (absolute): Coordinate of point **4** in the spindle axis. Input range -99999.9999 to 99999.9999
- **Number of cuts** Q240: Number of passes to be made between points **1** and **4**, **2** and **3**. Input range 0 to 99999
- **Feed rate for milling** Q207: Traversing speed of the tool in mm/min while milling. The TNC performs the first step at half the programmed feed rate. Input range 0 to 99999.999, alternatively **FAUTO**, **FU**, **FZ**

10.4 FACE MILLING (Cycle 232, DIN/ISO: G232)

Cycle run

Cycle 232 is used to face mill a level surface in multiple infeeds while taking the finishing allowance into account. Three machining strategies are available:

- **Strategy Q389=0**: Meander machining, stepover outside the surface being machined
- **Strategy Q389=1:** Meander machining, stepover within the surface being machined
- **Strategy Q389=2:** Line-by-line machining, retraction and stepover at the positioning feed rate

1 From the current position, the TNC positions the tool at rapid traverse **FMAX** to the starting position using positioning logic 1: If the current position in the spindle axis is greater than the 2nd set-up clearance, the control positions the tool first in the machining plane and then in the spindle axis. Otherwise it first moves to the 2nd set-up clearance and then in the machining plane. The starting point in the machining plane is offset from the edge of the workpiece by the tool radius and the safety clearance to the side.

2 The tool then moves in the spindle axis at the positioning feed rate to the first plunging depth calculated by the control.

Strategy Q389=0

3 The tool subsequently advances to the stopping point 2 at the programmed feed rate for milling. The end point lies **outside** the surface. The control calculates the end point from the programmed starting point, the programmed length, the programmed safety clearance to the side and the tool radius.

4 The TNC offsets the tool to the starting point in the next pass at the pre-positioning feed rate. The offset is calculated from the programmed width, the tool radius and the maximum path overlap factor.

5 The tool then moves back in the direction of the starting point 1.

6 The process is repeated until the programmed surface has been completed. At the end of the last pass, the tool plunges to the next machining depth.

7 In order to avoid non-productive motions, the surface is then machined in reverse direction.

8 The process is repeated until all infeeds have been machined. In the last infeed, simply the finishing allowance entered is milled at the finishing feed rate.

9 At the end of the cycle, the tool is retracted in **FMAX** to the 2nd set-up clearance.

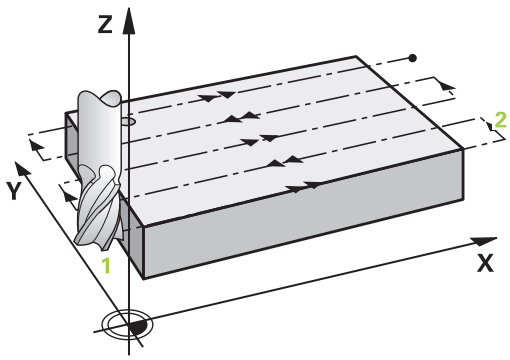

Strategy Q389=1

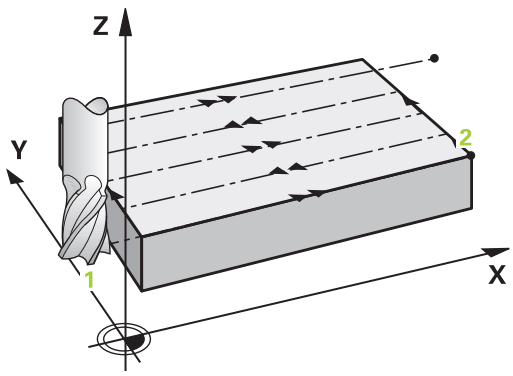

3 The tool subsequently advances to the stopping point **2** at the programmed feed rate for milling. The end point lies **within** the surface. The control calculates the end point from the programmed starting point, the programmed length and the tool radius.
4 The TNC offsets the tool to the starting point in the next pass at the pre-positioning feed rate. The offset is calculated from the programmed width, the tool radius and the maximum path overlap factor.
5 The tool then moves back in the direction of the starting point **1**. The motion to the next line occurs within the workpiece borders.
6 The process is repeated until the programmed surface has been completed. At the end of the last pass, the tool plunges to the next machining depth.
7 In order to avoid non-productive motions, the surface is then machined in reverse direction.
8 The process is repeated until all infeeds have been machined. In the last infeed, simply the finishing allowance entered is milled at the finishing feed rate.
9 At the end of the cycle, the tool is retracted in **FMAX** to the 2nd set-up clearance.

Strategy Q389=2

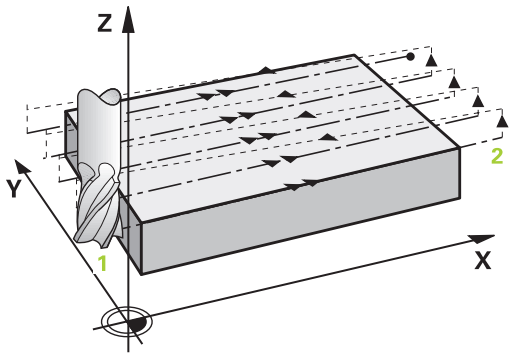

3 The tool subsequently advances to the stopping point **2** at the programmed feed rate for milling. The end point lies outside the surface. The control calculates the end point from the programmed starting point, the programmed length, the programmed safety clearance to the side and the tool radius.
4 The TNC positions the tool in the spindle axis to the set-up clearance over the current infeed depth, and then moves at the pre-positioning feed rate directly back to the starting point in the next line. The TNC calculates the offset from the programmed width, the tool radius and the maximum path overlap factor.
5 The tool then returns to the current infeed depth and moves in the direction of the next end point **2**.
6 The multipass process is repeated until the programmed surface has been completed. At the end of the last pass, the tool plunges to the next machining depth.
7 In order to avoid non-productive motions, the surface is then machined in reverse direction.
8 The process is repeated until all infeeds have been machined. In the last infeed, simply the finishing allowance entered is milled at the finishing feed rate.
9 At the end of the cycle, the tool is retracted in **FMAX** to the 2nd set-up clearance.

Please note while programming:

Enter the 2nd set-up clearance in Q204 such that no collision with the workpiece or the fixtures can occur.

If the starting point in the 3rd axis Q227 and the end point in the 3rd axis Q386 are entered as equal values, the TNC does not run the cycle (depth = 0 has been programmed).

Cycle parameters

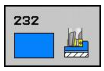

- **Machining strategy (0/1/2)** Q389: Determine how the TNC should machine the surface:
  0: Meander machining, stepover at the positioning feed rate outside the surface being machined
  1: Meander machining, stepover at the feed rate for milling within the surface being machined
  2: Line-by-line machining, retraction and stepover at the positioning feed rate
- **Starting point in 1st axis** Q225 (absolute): Starting point coordinate of the surface to be machined in the reference axis of the working plane. Input range -99999.9999 to 99999.9999
- **Starting point in 2nd axis** Q226 (absolute): Starting point coordinate of the surface to be machined in the minor axis of the working plane. Input range -99999.9999 to 99999.9999
- **Starting point in 3rd axis** Q227 (absolute): Coordinate of the workpiece surface used to calculate the infeeds. Input range -99999.9999 to 99999.9999
- **End point in 3rd axis** Q386 (absolute): Coordinate in the spindle axis to which the surface is to be face milled. Input range -99999.9999 to 99999.9999
- **1st side length** Q218 (incremental value): Length of the surface to be machined in the reference axis of the working plane. Use the algebraic sign to specify the direction of the first milling path in reference to the **starting point in the 1st axis**. Input range -99999.9999 to 99999.9999
- **2nd side length** Q219 (incremental value): Length of the surface to be machined in the minor axis of the working plane. Use the algebraic sign to specify the direction of the first stepover in reference to the **starting point in the 2nd axis**. Input range -99999.9999 to 99999.9999

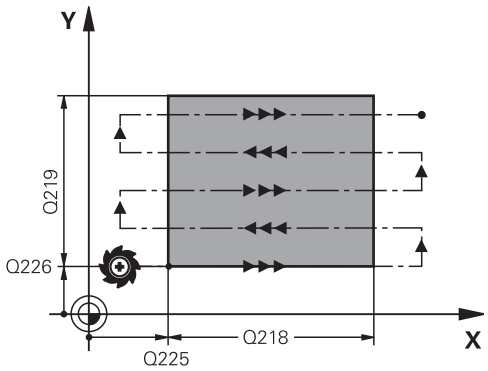

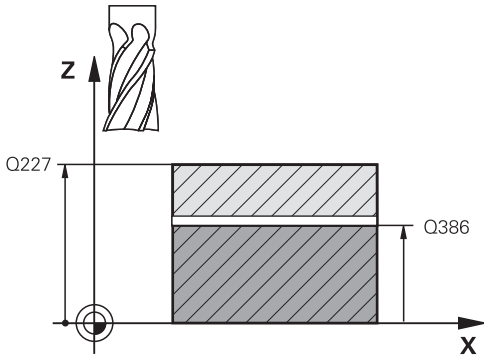

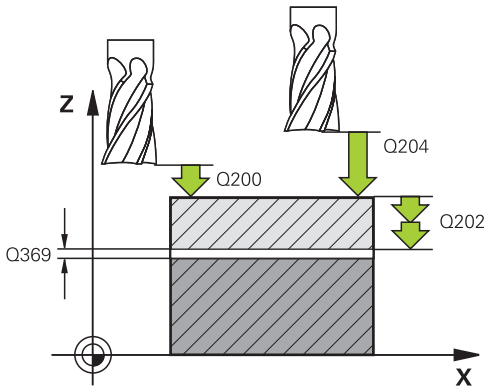

- **Maximum plunging depth** Q202 (incremental value): **Maximum** amount that the tool is advanced each time. The TNC calculates the actual plunging depth from the difference between the end point and starting point of the tool axis (taking the finishing allowance into account), so that uniform plunging depths are used each time. Input range 0 to 99999.9999
- **Allowance for floor** Q369 (incremental): Distance used for the last infeed. Input range 0 to 99999.9999
- **Max. path overlap factor** Q370: **Maximum** stepover factor k. The TNC calculates the actual stepover from the second side length (Q219) and the tool radius so that a constant stepover is used for machining. If you have entered a radius R2 in the tool table (e.g. tooth radius when using a face-milling cutter), the TNC reduces the stepover accordingly. Input range 0.1 to 1.9999
- **Feed rate for milling** Q207: Traversing speed of the tool in mm/min while milling. Input range 0 to 99999.999 alternatively **FAUTO**, **FU**, **FZ**
- **Feed rate for finishing** Q385: Traversing speed of the tool in mm/min, while milling the last infeed. Input range 0 to 99999.9999; alternatively **FAUTO**, **FU**, **FZ**
- **Feed rate for pre-positioning** Q253: Traversing speed of the tool in mm/min when approaching the starting position and when moving to the next pass. If you are moving the tool transversely to the material (Q389=1), the TNC moves the tool at the feed rate for milling Q207. Input range 0 to 99999.9999, alternatively **FMAX**, **FAUTO**
- **Set-up clearance** Q200 (incremental): Distance between tool tip and the starting position in the tool axis. If you are milling with machining strategy Q389=2, the TNC moves the tool at the set-up clearance over the current plunging depth to the starting point of the next pass. Input range 0 to 99999.9999
- **Clearance to side** Q357 (incremental): Safety clearance to the side of the workpiece when the tool approaches the first plunging depth, and distance at which the stepover occurs if the machining strategy Q389=0 or Q389=2 is used. Input range 0 to 99999.9999
- **2nd set-up clearance** Q204 (incremental): Coordinate in the spindle axis at which no collision between tool and workpiece (fixtures) can occur. Input range 0 to 99999.9999, alternatively **PREDEF**

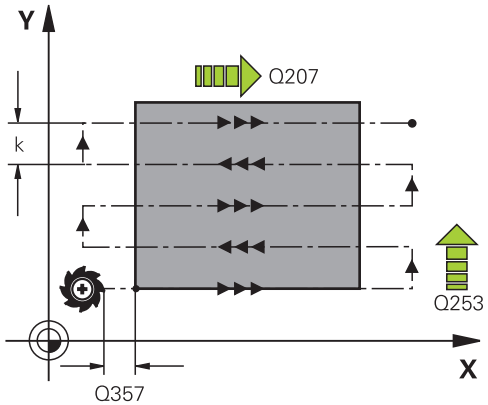

NC blocks

71 CYCL DEF 232 FACE MILLING	
Q389=2	;STRATEGY
Q225=+10	;STARTNG PNT 1ST AXIS
Q226=+12	;STARTNG PNT 2ND AXIS
Q227=+2.5	;STARTNG PNT 3RD AXIS
Q386=-3	;END POINT 3RD AXIS
Q218=150	;FIRST SIDE LENGTH
Q219=75	;2ND SIDE LENGTH
Q202=2	;MAX. PLUNGING DEPTH
Q369=0.5	;ALLOWANCE FOR FLOOR
Q370=1	;MAX. TOOL PATH OVERLAP
Q207=500	;FEED RATE FOR MILLING
Q385=800	;FINISHING FEED RATE
Q253=2000	;F PRE-POSITIONING
Q200=2	;SET-UP CLEARANCE
Q357=2	;CLEARANCE TO SIDE
Q204=2	;2ND SET-UP CLEARANCE

10.5 Programming Examples

Example: Multipass milling

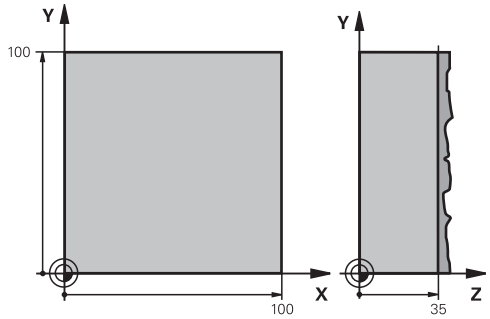

0 BEGIN PGM C230 MM	
1 BLK FORM 0.1 Z X+0 Y+0 Z+0	Definition of workpiece blank
2 BLK FORM 0.2 X+100 Y+100 Z+40	
3 TOOL CALL 1 Z S3500	Tool call
4 L Z+250 R0 FMAX	Retract the tool
5 CYCL DEF 230 MULTIPASS MILLING	Cycle definition: MULTIPASS MILLING
Q225=+0 ;STARTNG PNT 1ST AXIS	
Q226=+0 ;STARTNG PNT 2ND AXIS	
Q227=+35 ;STARTNG PNT 3RD AXIS	
Q218=100 ;FIRST SIDE LENGTH	
Q219=100 ;2ND SIDE LENGTH	
Q240=25 ;NUMBER OF CUTS	
Q206=250 ;FEED RATE FOR PLNGNG	
Q207=400 ;FEED RATE FOR MILLING	
Q209=200 ;STEPOVER FEED RATE	
Q200=2 ;SET-UP CLEARANCE	
6 L X+-25 Y+0 R0 FMAX M3	Pre-position near the starting point
7 CYCL CALL	Cycle call
8 L Z+250 R0 FMAX M2	Retract in the tool axis, end program
9 END PGM C230 MM	

11

Cycles: Coordinate Transformations

11.1 Fundamentals

Overview

Once a contour has been programmed, you can position it on the workpiece at various locations and in different sizes through the use of coordinate transformations. The TNC provides the following coordinate transformation cycles:

Cycle	Soft key	Page
7 DATUM For shifting contours directly within the program or from datum tables	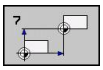	221
247 DATUM SETTING Datum setting during program run	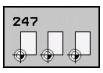	226
8 MIRRORING Mirroring contours	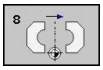	227
10 ROTATION Rotating contours in the working plane	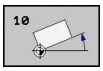	228
11 SCALING FACTOR Increasing or reducing the size of contours	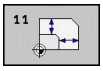	230
26 AXIS-SPECIFIC SCALING Increasing or reducing the size of contours with axis-specific scaling	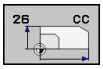	231
19 WORKING PLANE Machining in tilted coordinate system on machines with swivel heads and/or rotary tables		232

Effect of coordinate transformations

Beginning of effect: A coordinate transformation becomes effective as soon as it is defined—it is not called separately. It remains in effect until it is changed or canceled.

To cancel coordinate transformations:

- Define cycles for basic behavior with a new value, such as scaling factor 1.0
- Execute a miscellaneous function M2, M30, or an END PGM block (depending on machine parameter **clearMode**).
- Select a new program

11.2 DATUM SHIFT (Cycle 7, DIN/ISO: G54)

Effect

A DATUM SHIFT allows machining operations to be repeated at various locations on the workpiece.

When the DATUM SHIFT cycle is defined, all coordinate data is based on the new datum. The TNC displays the datum shift in each axis in the additional status display. Input of rotary axes is also permitted.

Resetting

- Program a datum shift to the coordinates X=0, Y=0 etc. directly with a cycle definition.
- Call a datum shift to the coordinates X=0; Y=0 etc. from a datum table.

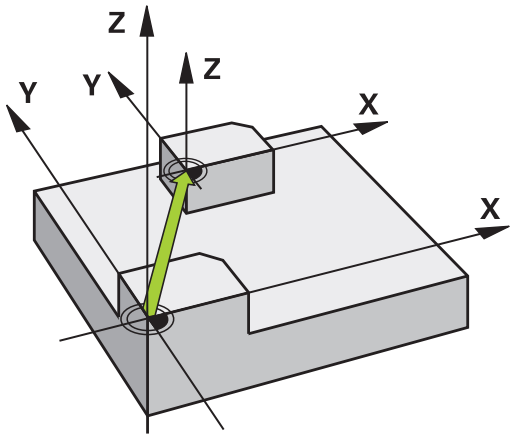

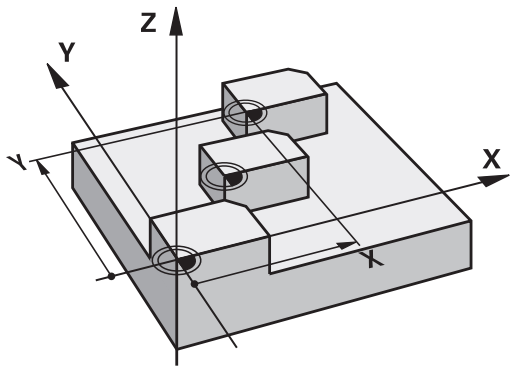

Cycle parameters

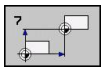

- **Datum shift**: Enter the coordinates of the new datum. Absolute values are referenced to the manually set workpiece datum. Incremental values are always referenced to the datum which was last valid—this can be a datum which has already been shifted. Input range: Up to six NC axes, each from –99999.9999 to 99999.9999

NC blocks

```
13 CYCL DEF 7.0 DATUM SHIFT
14 CYCL DEF 7.1 X+60
16 CYCL DEF 7.3 Z-5
15 CYCL DEF 7.2 Y+40
```

11.3 DATUM SHIFT with datum tables (Cycle 7, DIN/ISO: G53)

Effect

Datum tables are used for:

- Frequently recurring machining sequences at various locations on the workpiece
- Frequent use of the same datum shift

Within a program, you can either program datum points directly in the cycle definition or call them from a datum table.

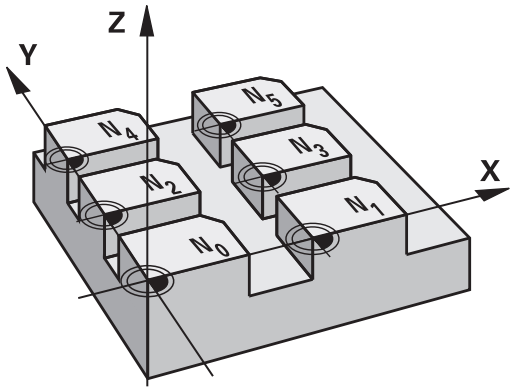

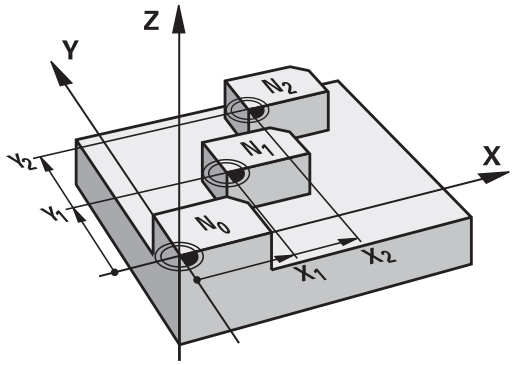

Resetting

- Call a datum shift to the coordinates X=0; Y=0 etc. from a datum table.
- Execute a datum shift to the coordinates X=0, Y=0 etc. directly with a cycle definition

Status displays

In the additional status display, the following data from the datum table are shown:

- Name and path of the active datum table
- Active datum number
- Comment from the DOC column of the active datum number

Please note while programming:

! **Danger of collision!**
Datums from a datum table are **always and exclusively** referenced to the current datum (preset).

If you are using datum shifts with datum tables, then use the **SEL TABLE** function to activate the desired datum table from the NC program.

If you work without **SEL TABLE**, then you must activate the desired datum table before the test run or the program run. (This applies also to the programming graphics).

- Use the file management to select the desired table for a test run in the **Test Run** operating mode: The table receives the status S.
- Use the file management in a program run mode to select the desired table for program run: The table receives the status M.

The coordinate values from datum tables are only effective with absolute coordinate values.

New lines can only be inserted at the end of the table.

If you create datum tables, the file name has to start with a letter.

Cycle parameters

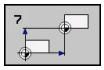

- **Datum shift**: Enter the number of the datum from the datum table or a Q parameter. If you enter a Q parameter, the TNC activates the datum number entered in the Q parameter. Input range: 0 to 9999

NC blocks

```
77 CYCL DEF 7.0 DATUM SHIFT
78 CYCL DEF 7.1 #5
```

Selecting a datum table in the part program

With the **SEL TABLE** function you select the table from which the TNC takes the datums:

- Select the functions for program call: Press the PGM CALL key

- Press the DATUM TABLE soft key
- Select the complete path name of the datum table or the file with the SELECT soft key and confirm your entry with the END key

Program a **SEL TABLE** block before Cycle 7 Datum Shift.

A datum table selected with **SEL TABLE** remains active until you select another datum table with **SEL TABLE** or through PGM MGT.

Editing the datum table in the Programming and Editing mode of operation

> After you have changed a value in a datum table, you must save the change with the ENT key. Otherwise the change might not be included during program run.

Select the datum table in the **Programming and Editing** mode of operation

PGM MGT

- Call the file manager: Press the PGM MGT key
- Display the datum tables: Press the SELECT TYPE and SHOW .D soft keys
- Select the desired table or enter a new file name.
- Edit the file. The soft-key row comprises the following functions for editing:

Function	Soft key
Select beginning of table	BEGIN
Select end of table	END
Go to the previous page	PAGE
Go to next page	PAGE
Insert line (only possible at the end of table)	INSERT LINE
Delete line	DELETE LINE
Find	FIND
Go to beginning of line	BEGIN LINE
Go to end of line	END LINE
Copy the current value	COPY FIELD
Insert the copied value	PASTE FIELD
Add the entered number of lines (datums) to the end of the table	APPEND N LINES

Configuring the datum table

If you do not wish to define a datum for an active axis, press the DEL key. Then the TNC clears the numerical value from the corresponding input field.

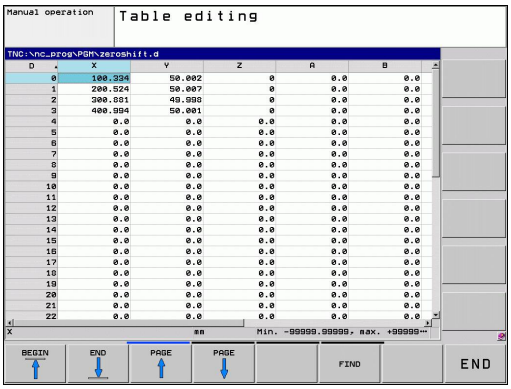

> ⇨ You can change the properties of tables. Enter the code number 555343 in the MOD menu. The TNC then offers the EDIT FORMAT soft key if a table is selected. When you press this soft key, the TNC opens a pop-up window where the properties are shown for each column of the selected table. Any changes made only affect the open table.

To exit a datum table

Select a different type of file in file management and choose the desired file.

> ! After you have changed a value in a datum table, you must save the change with the ENT key. Otherwise the change may not be included during program run.

Status displays

In the additional status display, the TNC shows the values of the active datum shift.

11.4 DATUM SETTING (Cycle 247, DIN/ISO: G247)

Effect

With the DATUM SETTING cycle you can activate as the new datum a preset defined in a preset table.

After a DATUM SETTING cycle definition, all of the coordinate inputs and datum shifts (absolute and incremental) are referenced to the new preset.

Status display

In the status display the TNC shows the active preset number behind the datum symbol.

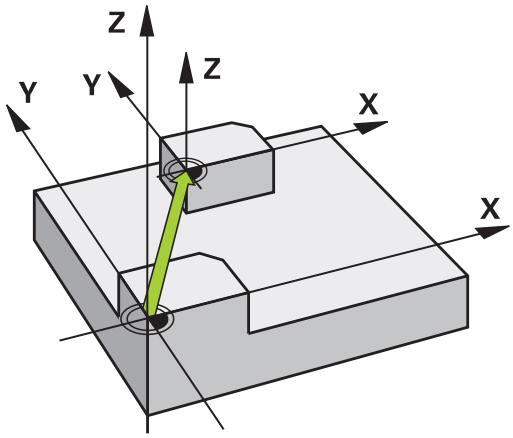

Please note before programming:

When activating a datum from the preset table, the TNC resets the datum shift, mirroring, rotation, scaling factor and axis-specific scaling factor.

If you activate preset number 0 (line 0), then you activate the datum that you last set in a manual operating mode.

Cycle 247 is not functional in Test Run mode.

Cycle parameters

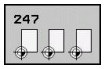

- **Number for datum?**: Enter the number of the datum to be activated from the preset table. Input range: 0 to 65535

NC blocks

```
13 CYCL DEF 247 DATUM SETTING
    Q339=4      ;DATUM NUMBER
```

Status displays

In the additional status display (POS. DISP. STATUS) the TNC shows the active preset number behind the **datum** dialog.

11.5 MIRRORING (Cycle 8, DIN/ISO: G28)

Effect

The TNC can machine the mirror image of a contour in the working plane.

The mirroring cycle becomes effective as soon as it is defined in the program. It is also effective in the Positioning with MDI mode of operation. The active mirrored axes are shown in the additional status display.

- If you mirror only one axis, the machining direction of the tool is reversed (except in SL cycles).
- If you mirror two axes, the machining direction remains the same.

The result of the mirroring depends on the location of the datum:

- If the datum lies on the contour to be mirrored, the element simply flips over.
- If the datum lies outside the contour to be mirrored, the element also "jumps" to another location.

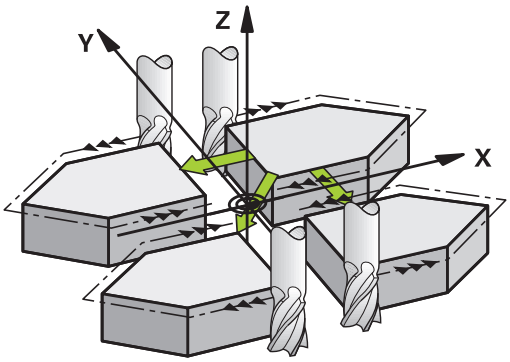

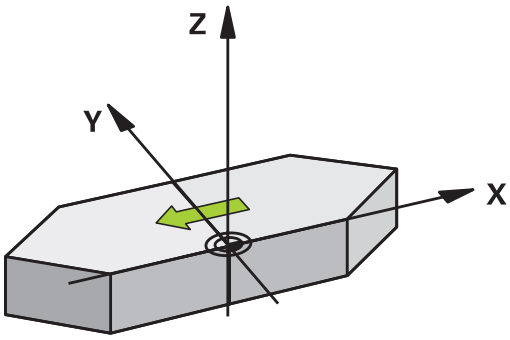

Resetting

Program the MIRROR IMAGE cycle once again with NO ENT.

Please note while programming:

If you mirror only one axis, the machining direction is reversed for the milling cycles (Cycles 2xx). Exception: Cycle 208, in which the direction defined in the cycle applies.

Cycle parameters

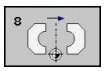

- **Mirrored axis?**: Enter the axis to be mirrored. You can mirror all axes except for the spindle axis—including rotary axes—with the exception of the spindle axis and its associated auxiliary axis. You can enter up to three axes. Input range: Up to three NC axes **X**, **Y**, **Z**, **U**, **V**, **W**, **A**, **B**, **C**

NC blocks

```
79 CYCL DEF 8.0 MIRROR IMAGE
80 CYCL DEF 8.1 X Y Z
```

11.6 ROTATION (Cycle 10, DIN/ISO: G73)

Effect

The TNC can rotate the coordinate system about the active datum in the working plane within a program.

The ROTATION cycle becomes effective as soon as it is defined in the program. It is also effective in the Positioning with MDI mode of operation. The active rotation angle is shown in the additional status display.

Reference axis for the rotation angle:

- X/Y plane: X axis
- Y/Z plane: Y axis
- Z/X plane: Z axis

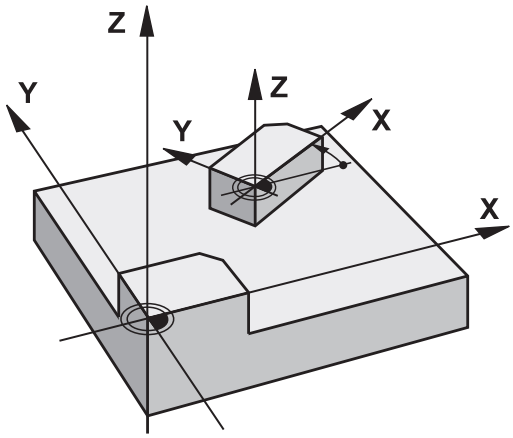

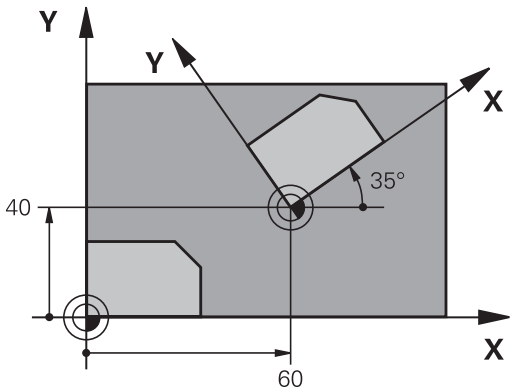

Resetting

Program the ROTATION cycle once again with a rotation angle of 0°.

Please note while programming:

An active radius compensation is canceled by defining Cycle 10 and must therefore be reprogrammed, if necessary.

After defining Cycle 10, you must move both axes of the working plane to activate rotation for all axes.

Cycle parameters

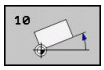

- **Rotation**: Enter the rotation angle in degrees (°). Input range –360.000° to +360.000° (absolute or incremental)

NC blocks

```
12 CALL LBL 1
13 CYCL DEF 7.0 DATUM SHIFT
14 CYCL DEF 7.1 X+60
15 CYCL DEF 7.2 Y+40
16 CYCL DEF 10.0 ROTATION
17 CYCL DEF 10.1 ROT+35
18 CALL LBL 1
```

11.7 SCALING (Cycle 11, DIN/ISO: G72)

Effect

The TNC can increase or reduce the size of contours within a program, enabling you to program shrinkage and oversize allowances.

SCALING becomes effective as soon as it is defined in the program. It is also effective in the Positioning with MDI mode of operation. The active scaling factor is shown in the additional status display.

The scaling factor has an effect on

- all three coordinate axes at the same time
- Dimensions in cycles

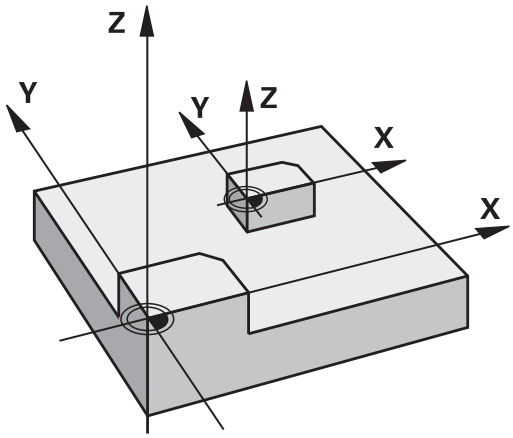

Prerequisite

It is advisable to set the datum to an edge or a corner of the contour before enlarging or reducing the contour.

Enlargement: SCL greater than 1 (up to 99.999 999)

Reduction: SCL less than 1 (down to 0.000 001)

Resetting

Program the SCALING cycle once again with a scaling factor of 1.

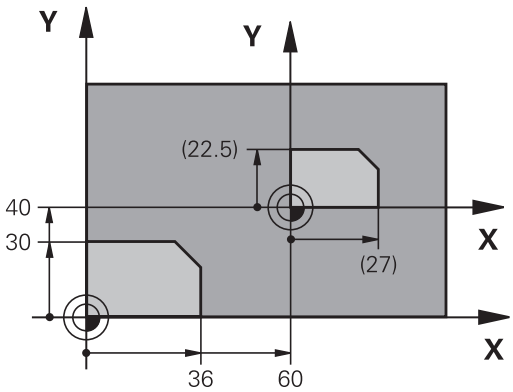

Cycle parameters

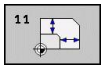

- **Scaling factor?**: Enter the scaling factor SCL. The TNC multiplies the coordinates and radii by the SCL factor (as described under "Effect" above). Input range: 0.000000 to 99.999999

NC blocks

```
11 CALL LBL 1
12 CYCL DEF 7.0 DATUM
13 CYCL DEF 7.1 X+60
14 CYCL DEF 7.2 Y+40
15 CYCL DEF 11.0 SCALING
16 CYCL DEF 11.1 SCL 0.75
17 CALL LBL 1
```

11.8 AXIS-SPECIFIC SCALING (Cycle 26)

Effect

With Cycle 26 you can account for shrinkage and oversize factors for each axis.

SCALING becomes effective as soon as it is defined in the program. It is also effective in the Positioning with MDI mode of operation. The active scaling factor is shown in the additional status display.

Resetting

Program the SCALING cycle once again with a scaling factor of 1 for the same axis.

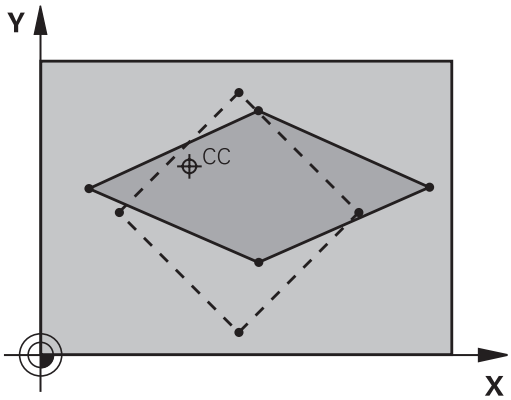

Please note while programming:

Coordinate axes sharing coordinates for arcs must be enlarged or reduced by the same factor.

You can program each coordinate axis with its own axis-specific scaling factor.

In addition, you can enter the coordinates of a center for all scaling factors.

The size of the contour is enlarged or reduced with reference to the center, and not necessarily (as in Cycle 11 SCALING) with reference to the active datum.

Cycle parameters

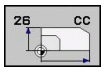

- **Axis and scaling factor**: Select the coordinate axis/axes by soft key and enter the factor(s) involved in enlarging or reducing. Input range: 0.000000 to 99.999999
- **Center coordinates**: Enter the center of the axis-specific enlargement or reduction. Input range -99999.9999 to 99999.9999

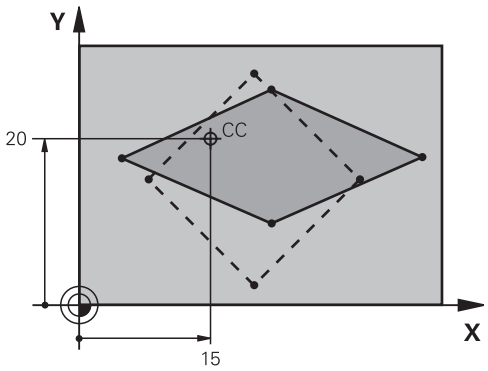

NC blocks

25 CALL LBL 1
26 CYCL DEF 26.0 AXIS-SPECIFIC SCALING
27 CYCL DEF 26.1 X 1.4 Y 0.6 CCX+15 CCY+20
28 CALL LBL 1

11.9 WORKING PLANE (Cycle 19, DIN/ISO: G80, software option 1)

Effect

In Cycle 19 you define the position of the working plane—i.e. the position of the tool axis referenced to the machine coordinate system—by entering tilt angles. There are two ways to determine the position of the working plane:

- Enter the position of the rotary axes directly.
- Describe the position of the working plane using up to 3 rotations (spatial angle) of the **fixed machine** coordinate system. The required spatial angle can be calculated by cutting a perpendicular line through the tilted working plane and considering it from the axis around which you wish to tilt. With two spatial angles, every tool position in space can be defined exactly.

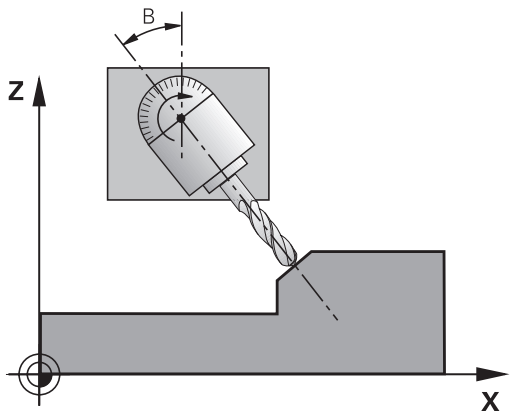

> Note that the position of the tilted coordinate system, and therefore also all movements in the tilted system, are dependent on your description of the tilted plane.

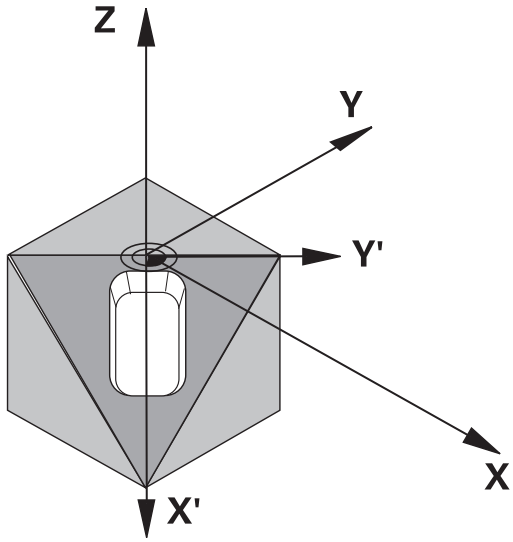

If you program the position of the working plane via spatial angles, the TNC will calculate the required angle positions of the tilted axes automatically and will store these in the parameters Q120 (A axis) to Q122 (C axis). If two solutions are possible, the TNC will choose the shorter path from the zero position of the rotary axes.

The axes are always rotated in the same sequence for calculating the tilt of the plane: The TNC first rotates the A axis, then the B axis, and finally the C axis.

Cycle 19 becomes effective as soon as it is defined in the program. As soon as you move an axis in the tilted system, the compensation for this specific axis is activated. You must move all axes to activate compensation for all axes.

If you set the function **Tilting program run** to **Active** in the Manual Operation mode, the angular value entered in this menu is overwritten by Cycle 19 WORKING PLANE.

Please note while programming:

The functions for tilting the working plane are interfaced to the TNC and the machine tool by the machine tool builder. With some swivel heads and tilting tables, the machine tool builder determines whether the entered angles are interpreted as coordinates of the rotary axes or as angular components of a tilted plane.

Refer to your machine manual.

Because nonprogrammed rotary axis values are interpreted as unchanged, you should always define all three spatial angles, even if one or more angles are at zero.

The working plane is always tilted around the active datum.

If you use Cycle 19 when M120 is active, the TNC automatically rescinds the radius compensation, which also rescinds the M120 function.

Cycle parameters

- **Rotary axis and tilt angle?**: Enter the axes of rotation together with the associated tilt angles. The rotary axes A, B and C are programmed using soft keys. Input range -360.000 to 360.000

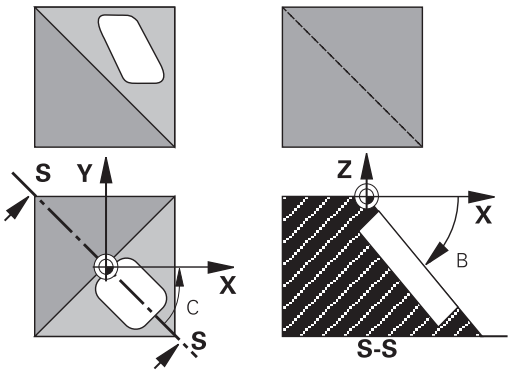

If the TNC automatically positions the rotary axes, you can enter the following parameters:

- **Feed rate? F=**: Traverse speed of the rotary axis during automatic positioning. Input range: 0 to 99999.999
- **Set-up clearance?** (incremental value): The TNC positions the tilting head so that the position that results from the extension of the tool by the set-up clearance does not change relative to the workpiece. Input range: 0 to 99999.9999

Resetting

To cancel the tilt angle, redefine the WORKING PLANE cycle and enter an angular value of 0° for all axes of rotation. You must then program the WORKING PLANE cycle once again and respond to the dialog question with the NO ENT key to disable the function.

Positioning the axes of rotation

The machine tool builder determines whether Cycle 19 positions the axes of rotation automatically or whether they must be positioned manually in the program. Refer to your machine manual.

Manual positioning of rotary axes

If the rotary axes are not positioned automatically in Cycle 19, you must position them in a separate L block after the cycle definition.

If you use axis angles, you can define the axis values right in the L block. If you use spatial angles, then use the Q parameters **Q120** (A-axis value), **Q121** (B-axis value) and **Q122** (C-axis value), which are described by Cycle 19.

For manual positioning, always use the rotary axis positions stored in Q parameters Q120 to Q122.

Avoid using functions, such as M94 (modulo rotary axes), in order to avoid discrepancies between the actual and nominal positions of rotary axes in multiple definitions.

Example NC blocks:

10 L Z+100 R0 FMAX	
11 L X+25 Y+10 R0 FMAX	
12 CYCL DEF 19.0 WORKING PLANE	Define the spatial angle for calculation of the compensation
13 CYCL DEF 19.1 A+0 B+45 C+0	
14 L A+Q120 C+Q122 R0 F1000	Position the rotary axes by using values calculated by Cycle 19
15 L Z+80 R0 FMAX	Activate compensation for the spindle axis
16 L X-8.5 Y-10 R0 FMAX	Activate compensation for the working plane

Automatic positioning of rotary axes

If the rotary axes are positioned automatically in Cycle 19:

- The TNC can position only controlled axes
- In order for the tilted axes to be positioned, you must enter a feed rate and a set-up clearance in addition to the tilting angles, during cycle definition.
- Use only preset tools (the full tool length must be defined).
- The position of the tool tip as referenced to the workpiece surface remains nearly unchanged after tilting
- The TNC performs the tilt at the last programmed feed rate. The maximum feed rate that can be reached depends on the complexity of the swivel head or tilting table.

Example NC blocks:

10 L Z+100 R0 FMAX	
11 L X+25 Y+10 R0 FMAX	
12 CYCL DEF 19.0 WORKING PLANE	Define the angle for calculation of the compensation
13 CYCL DEF 19.1 A+0 B+45 C+0 F5000 SETUP50	Also define the feed rate and the clearance
14 L Z+80 R0 FMAX	Activate compensation for the spindle axis
15 L X-8.5 Y-10 R0 FMAX	Activate compensation for the working plane

Position display in the tilted system

On activation of Cycle 19, the displayed positions (**ACTL** and **NOML**) and the datum indicated in the additional status display are referenced to the tilted coordinate system. The positions displayed immediately after cycle definition might not be the same as the coordinates of the last programmed position before Cycle 19.

Workspace monitoring

The TNC monitors only those axes in the tilted coordinate system that are moved. If necessary, the TNC outputs an error message.

Positioning in a tilted coordinate system

With the miscellaneous function M130 you can move the tool, while the coordinate system is tilted, to positions that are referenced to the non-tilted coordinate system.

Positioning movements with straight lines that are referenced to the machine coordinate system (blocks with M91 or M92) can also be executed in a tilted working plane. Constraints:

- Positioning is without length compensation.
- Positioning is without machine geometry compensation.
- Tool radius compensation is not permitted.

Combining coordinate transformation cycles

When combining coordinate transformation cycles, always make sure the working plane is swiveled around the active datum. You can program a datum shift before activating Cycle 19. In this case, you are shifting the machine-based coordinate system.

If you program a datum shift after having activated Cycle 19, you are shifting the tilted coordinate system.

Important: When resetting the cycles, use the reverse sequence used for defining them:

1. 1st: Activate the datum shift
2. Activate tilting function
3. Activate rotation

...

Workpiece machining

...

1. Reset the rotation
2. Reset the tilting function
3. Reset the datum shift

Procedure for working with Cycle 19 WORKING PLANE

1 Write the program

- Define the tool (not required if TOOL.T is active), and enter the full tool length.
- Call the tool.
- Retract the tool in the tool axis to a position where there is no danger of collision with the workpiece or clamping devices during tilting.
- If required, position the rotary axis or axes with an L block to the appropriate angular value(s) (depending on a machine parameter).
- Activate datum shift if required.
- Define Cycle 19 WORKING PLANE; enter the angular values for the tilt axes
- Traverse all principal axes (X, Y, Z) to activate compensation.
- Write the program as if the machining process were to be executed in a non-tilted plane.
- If required, define Cycle 19 WORKING PLANE with other angular values to execute machining in a different axis position. In this case, it is not necessary to reset Cycle 19. You can define the new angular values directly.
- Reset Cycle 19 WORKING PLANE; program 0° for all tilt axes.
- Disable the WORKING PLANE function; redefine Cycle 19 and answer the dialog question with NO ENT.
- Reset datum shift if required.
- Position the tilt axes to the 0° position if required.

2 Clamp the workpiece

3 Datum setting

- Manually by touch-off
- Controlled with a HEIDENHAIN 3-D touch probe (see the Touch Probe Cycles User's Manual, chapter 2).
- Automatically with a HEIDENHAIN 3-D touch probe (see the Touch Probe Cycles User's Manual, chapter 3).

4 Start the part program in the operating mode Program Run, Full Sequence

5 Manual Operation mode

Use the 3-D ROT soft key to set the TILT WORKING PLANE function to INACTIVE. Enter an angular value of 0° for each rotary axis in the menu.

11.10 Programming Examples

Example: Coordinate transformation cycles

Program sequence

- Program the coordinate transformations in the main program
- Machining within a subprogram

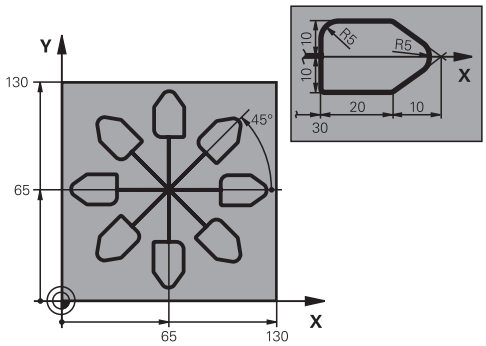

0 BEGIN PGM COTRANS MM	
1 BLK FORM 0.1 Z X+0 Y+0 Z-20	Definition of workpiece blank
2 BLK FORM 0.2 X+130 Y+130 Z+0	
3 TOOL CALL 1 Z S4500	Tool call
4 L Z+250 R0 FMAX	Retract the tool
5 CYCL DEF 7.0 DATUM SHIFT	Shift datum to center
6 CYCL DEF 7.1 X+65	
7 CYCL DEF 7.2 Y+65	
8 CALL LBL 1	Call milling operation
9 LBL 10	Set label for program section repeat
10 CYCL DEF 10.0 ROTATION	Rotate by 45° (incremental)
11 CYCL DEF 10.1 IROT+45	
12 CALL LBL 1	Call milling operation
13 CALL LBL 10 REP 6/6	Return jump to LBL 10; repeat the milling operation six times
14 CYCL DEF 10.0 ROTATION	Reset the rotation
15 CYCL DEF 10.1 ROT+0	
16 CYCL DEF 7.0 DATUM SHIFT	Reset the datum shift
17 CYCL DEF 7.1 X+0	
18 CYCL DEF 7.2 Y+0	
19 L Z+250 R0 FMAX M2	Retract in the tool axis, end program
20 LBL 1	Subprogram 1
21 L X+0 Y+0 R0 FMAX	Define milling operation
22 L Z+2 R0 FMAX M3	
23 L Z-5 R0 F200	
24 L X+30 RL	
25 L IY+10	
26 RND R5	
27 L IX+20	
28 L IX+10 IY-10	
29 RND R5	
30 L IX-10 IY-10	

31 L IX-20	
32 L IY+10	
33 L X+0 Y+0 R0 F5000	
34 L Z+20 R0 FMAX	
35 LBL 0	
36 END PGM COTRANS MM	

12

Cycles: Special Functions

12.1 Fundamentals

Overview

The TNC provides five cycles for the following special purposes:

Cycle	Soft key	Page
9 DWELL TIME		243
12 PROGRAM CALL	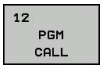	244
13 SPINDLE ORIENTATION	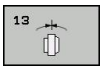	245
32 TOLERANCE	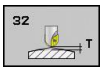	246
225 ENGRAVING of texts		249

12.2 DWELL TIME (Cycle 9, DIN/ISO: G04)

Function

This causes the execution of the next block within a running program to be delayed by the programmed DWELL TIME. A dwell time can be used for such purposes as chip breaking.

The cycle becomes effective as soon as it is defined in the program. Modal conditions such as spindle rotation are not affected.

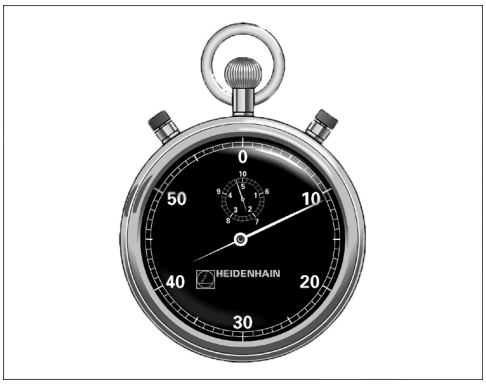

NC blocks

```
89 CYCL DEF 9.0 DWELL TIME
90 CYCL DEF 9.1 DWELL 1.5
```

Cycle parameters

- **Dwell time in seconds**: Enter the dwell time in seconds. Input range: 0 to 3600 s (1 hour) in steps of 0.001 seconds

12.3 PROGRAM CALL (Cycle 12, DIN/ISO: G39)

Cycle function

Routines that you have programmed (such as special drilling cycles or geometrical modules) can be written as main programs. These can then be called like fixed cycles.

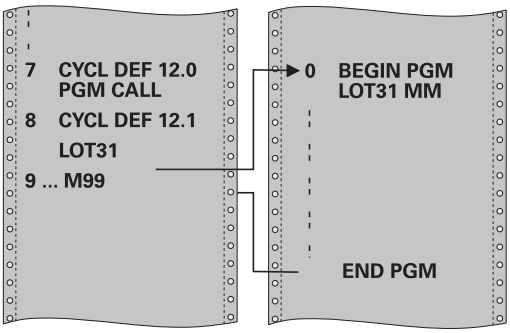

Please note while programming:

The program you are calling must be stored on the hard disk of your TNC.

If the program you are defining to be a cycle is located in the same directory as the program you are calling it from, you need only enter the program name.

If the program you are defining to be a cycle is not located in the same directory as the program you are calling it from, you must enter the complete path, for example **TNC:\KLAR35\FK1\50.H**.

If you want to define a DIN/ISO program to be a cycle, enter the file type .I behind the program name.

As a rule, Q parameters are globally effective when called with Cycle 12. So please note that changes to Q parameters in the called program can also influence the calling program.

Cycle parameters

12
PGM
CALL

- **Program name**: Enter the name of the program you want to call and, if necessary, the directory it is located in or
- Activate the file select dialog with the SELECT soft key and select the program to be called

Call the program with:

- CYCL CALL (separate block) or
- M99 (blockwise) or
- M89 (executed after every positioning block)

Designate program 50 as a cycle and call it with M99

```
55 CYCL DEF 12.0 PGM CALL
56 CYCL DEF 12.1 PGM TNC:
\KLAR35\FK1\50.H
57 L X+20 Y+50 FMAX M99
```

12.4 SPINDLE ORIENTATION (Cycle 13, DIN/ISO: G36)

Cycle function

Machine and TNC must be specially prepared by the machine tool builder for use of this cycle.

The TNC can control the machine tool spindle and rotate it to a given angular position.

Oriented spindle stops are required for

- Tool changing systems with a defined tool change position
- Orientation of the transmitter/receiver window of HEIDENHAIN 3-D touch probes with infrared transmission

The angle of orientation defined in the cycle is positioned to by entering M19 or M20 (depending on the machine).

If you program M19 or M20 without having defined Cycle 13, the TNC positions the machine tool spindle to an angle that has been set by the machine manufacturer (see your machine manual).

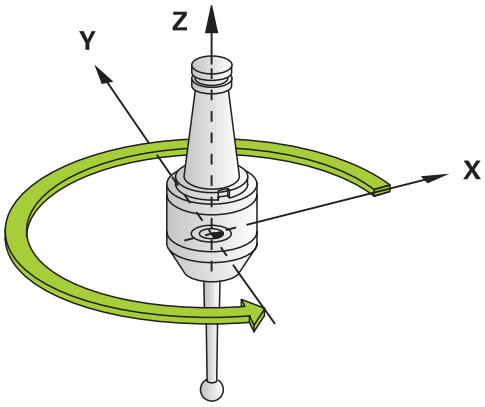

NC blocks

```
93 CYCL DEF 13.0 ORIENTATION
94 CYCL DEF 13.1 ANGLE 180
```

Please note while programming:

Cycle 13 is used internally for Cycles 202, 204 and 209. Please note that, if required, you must program Cycle 13 again in your NC program after one of the machining cycles mentioned above.

Cycle parameters

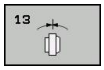

- **Angle of orientation**: Enter the angle referenced to the reference axis of the working plane. Input range: 0.0000° to 360.0000°

12.5 TOLERANCE (Cycle 32, DIN/ISO: G62)

Cycle function

Machine and TNC must be specially prepared by the machine tool builder for use of this cycle.

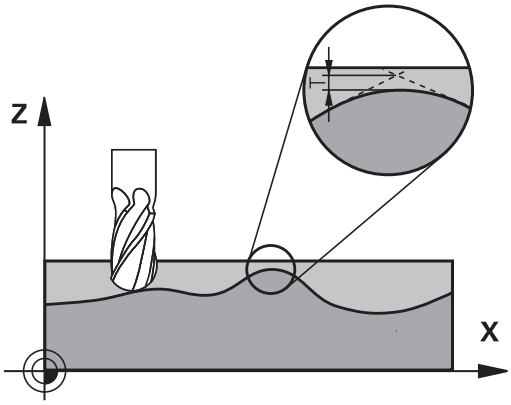

With the entries in Cycle 32 you can influence the result of HSC machining with respect to accuracy, surface definition and speed, inasmuch as the TNC has been adapted to the machine's characteristics.

The TNC automatically smoothens the contour between two path elements (whether compensated or not). The tool has constant contact with the workpiece surface and therefore reduces wear on the machine tool. The tolerance defined in the cycle also affects the traverse paths on circular arcs.

If necessary, the TNC automatically reduces the programmed feed rate so that the program can be machined at the fastest possible speed without short pauses for computing time. **Even if the TNC does not move with reduced speed, it will always comply with the tolerance that you have defined.** The larger you define the tolerance, the faster the TNC can move the axes.

Smoothing the contour results in a certain amount of deviation from the contour. The size of this contour error (**tolerance value**) is set in a machine parameter by the machine manufacturer. With **CYCLE 32** you can change the pre-set tolerance value and select different filter settings, provided that your machine tool builder has implemented these features.

Influences of the geometry definition in the CAM system

The most important factor of influence in offline NC program creation is the chord error S defined in the CAM system.
The maximum point spacing of NC programs generated in a postprocessor (PP) is defined through the chord error. If the chord error is less than or equal to the tolerance value **T** defined in Cycle 32, then the TNC can smooth the contour points unless any special machine settings limit the programmed feed rate.

You will achieve optimal smoothing if in Cycle 32 you choose a tolerance value between 110-% and 200-% of the CAM chord error.

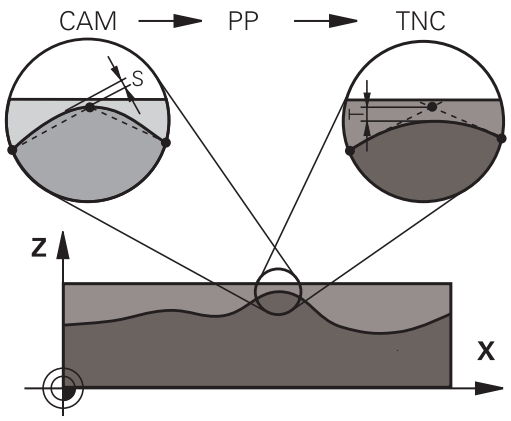

Please note while programming:

With very small tolerance values the machine cannot cut the contour without jerking. These jerking movements are not caused by poor processing power in the TNC, but by the fact that, in order to machine the contour element transitions very exactly, the TNC might have to drastically reduce the speed.

Cycle 32 is DEF active which means that it becomes effective as soon as it is defined in the part program.

The TNC resets Cycle 32 if you

- Redefine it and confirm the dialog question for the **tolerance value** with NO ENT.
- Select a new program with the PGM MGT key.

After you have reset Cycle 32, the TNC reactivates the tolerance that was predefined by machine parameter.

In a program with millimeters set as unit of measure, the TNC interprets the entered tolerance value in millimeters. In an inch program it interprets it as inches.

If you transfer a program with Cycle 32 that contains only the cycle parameter **Tolerance value** T, the control inserts the two remaining parameters with the value 0 if required.

As the tolerance value increases, the diameter of circular movements usually decreases. If the HSC filter is active on your machine (ask your machine tool builder, if necessary), the circle can also become larger.

If Cycle 32 is active, the TNC shows the parameters defined for Cycle 32 on the **CYC** tab of the additional status display.

Cycle parameters

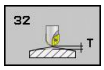

- **Tolerance value T**: Permissible contour deviation in mm (or inches with inch programming). Input range 0 to 99999.9999
- **HSC MODE, Finishing=0, Roughing=1**: Activate filter:
  - Input value 0: **Milling with increased contour accuracy**. The TNC uses internally defined finishing filter settings
  - Input value 1: **Milling at an increased feed rate**. The TNC uses internally defined roughing filter settings
- **Tolerance for rotary axes TA**: Permissible position error of rotary axes in degrees when M128 is active (FUNCTION TCPM). The TNC always reduces the feed rate in such a way that—if more than one axis is traversed—the slowest axis moves at its maximum feed rate. Rotary axes are usually much slower than linear axes. You can significantly reduce the machining time for programs for more than one axis by entering a large tolerance value (e.g. 10°), since the TNC does not always have to move the rotary axis to the given nominal position. The contour will not be damaged by entering a rotary axis tolerance value. Only the position of the rotary axis with respect to the workpiece surface will change. Input range 0 to 179.9999

NC blocks

```
95 CYCL DEF 32.0 TOLERANCE
96 CYCL DEF 32.1 T0.05
97 CYCL DEF 32.2 HSC-MODE:1 TA5
```

12.6 ENGRAVING (Cycle 225, DIN/ISO: G225)

Cycle run

This cycle is used to engrave texts on a flat surface of the workpiece. The texts can be arranged in a straight line or along an arc.

1 The TNC positions the tool in the working plane to the starting point of the first character.
2 The tool plunges perpendicularly to the engraving floor and mills the character. The TNC retracts the tool to the set-up clearance between the characters when required. At the end of the character the tool is at the set-up clearance above the workpiece surface.
3 This process is repeated for all characters to be engraved.
4 Finally, the TNC retracts the tool to the 2nd set-up clearance.

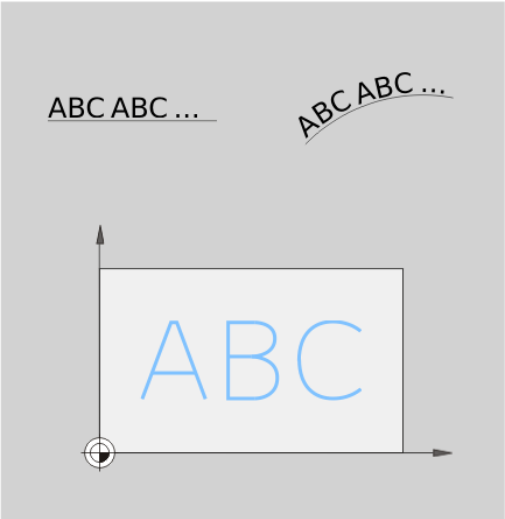

Please note while programming:

The algebraic sign for the cycle parameter DEPTH determines the working direction. If you program DEPTH=0, the cycle will not be executed.

If you engrave the text in a straight line (**Q516=0**), the starting point of the first character is determined by the tool position at the time the cycle is called.

If you engrave the text along an arc (**Q516=1**), the arc's center is determined by the tool position at the time the cycle is called.

The text to be engraved can also be transferred with a string variable (**QS**).

Cycle parameters

- **Engraving text** QS500: Text to be engraved inside quotation marks. Assignment of a string variable through the Q key of the numerical keypad. The Q key on the ASCI keyboard represents normal text input. Allowed entry characters: See "Engraving system variables"
- **Character height** Q513 (absolute): Height of the characters to be engraved in mm. Input range 0 to 99999.9999
- **Space factor** Q514: The font used is a proportional font. Each character has its own width, which is engraved correspondingly by the TNC if you program Q514 = 0. If Q514 is not equal to 0, the TNC scales the space between the characters. Input range 0 to 9.9999
- **Font** Q515: Currently without function
- **Text in a straight line/on arc (0/1)** Q516: Engrave text in a straight line: Input = 0 Engrave text on an arc: Input = 1
- **Angle of rotation** Q374: Center angle if the text is to be arranged on an arc. Input range -360.0000 to +360.0000°
- **Radius of text on an arc** Q517 (absolute): Radius of the arc in mm on which the TNC is to arrange the text. Input range 0 to 99999.9999
- **Feed rate for milling** Q207: Traversing speed of the tool in mm/min while milling. Input range 0 to 99999.999 alternatively **FAUTO**, **FU**, **FZ**
- **Depth** Q201 (incremental value): Distance between workpiece surface and engraving floor
- **Feed rate for plunging** Q206: Traversing speed of the tool when moving into the workpiece in mm/min. Input range 0 to 99999.999 alternatively **FAUTO**, **FU**
- **Set-up clearance** Q200 (incremental): Distance between tool tip and workpiece surface. Input range 0 to 99999.9999, alternatively **PREDEF**
- **Coordinate of workpiece surface** Q203 (absolute): Coordinate of the workpiece surface. Input range -99999.9999 to 99999.9999
- **2nd set-up clearance** Q204 (incremental): Coordinate in the spindle axis at which no collision between tool and workpiece (fixtures) can occur. Input range 0 to 99999.9999, alternatively **PREDEF**

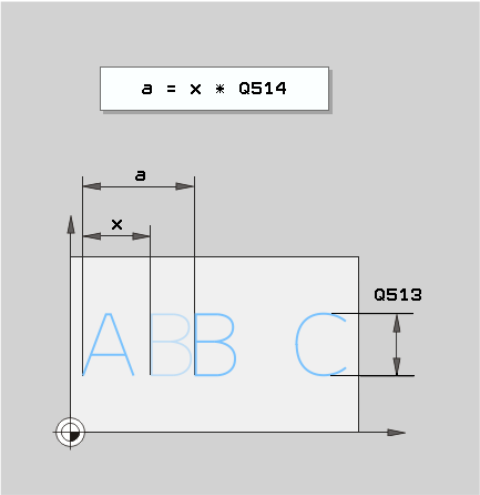

NC blocks

62 CYCL DEF 225 ENGRAVING	
Qs500="A"	;ENGRAVING TEXT
Q513=10	;CHARACTER HEIGHT
Q514=0	;SPACE FACTOR
Q515=0	;FONT
Q516=0	;TEXT LAYOUT
Q374=0	;ANGLE OF ROTATION
Q517=0	;CIRCLE RADIUS
Q207=750	;FEED RATE FOR MILLING
Q201=-0.5	;DEPTH
Q206=150	;FEED RATE FOR PLNGNG
Q200=2	;SET-UP CLEARANCE
Q203=+20	;SURFACE COORDINATE
Q204=50	;2ND SET-UP CLEARANCE

Allowed engraving characters

The following special characters are allowed in addition to lowercase letters, uppercase letters and numbers:

! # $ % & ‘ ( ) * + , - . / : ; < = > ? @ [\ ] _

> The TNC uses the special characters **%** and **** for special functions. These characters must be indicated twice in the text to be engraved (e.g. **%%**) if you want to engrave them.

Characters that cannot be printed

Apart from text, you can also define certain non-printable characters for formatting purposes. Enter the special character **** before the non-printable characters.

The following formatting possibilities are available:

- **\n**: Line break
- **\t**: Horizontal tab (the tab width is permanently set to 8 characters)
- **\t**: Vertical tab (the tab width is permanently set to one line)

Engraving system variables

In addition to the standard characters, you can engrave the contents of certain system variables. Enter the special character **%** before the system variable.

You can also engrave the current date. Enter **%time<x>**. **<x>** defines the date format whose meaning is identical to the function **SYSSTR ID332** (see the User's Manual for Conversational Programming, "Q parameter programming" chapter, "Copying system data to a string" section).

> Keep in mind that you must enter a leading 0 when entering the date formats 1 to 9, e.g. **time08**.

13

Using Touch Probe Cycles

13.1 General information about touch probe cycles

HEIDENHAIN only gives warranty for the function of the probing cycles if HEIDENHAIN touch probes are used.

The TNC must be specially prepared by the machine tool builder for the use of a 3-D touch probe.

Refer to your machine manual.

Method of function

Whenever the TNC runs a touch probe cycle, the 3-D touch probe approaches the workpiece in one linear axis. This is also true during an active basic rotation or with a tilted working plane. The machine tool builder determines the probing feed rate in a machine parameter (see "Before You Start Working with Touch Probe Cycles" later in this chapter).

When the probe stylus contacts the workpiece,

- the 3-D touch probe transmits a signal to the TNC: the coordinates of the probed position are stored,
- the touch probe stops moving, and
- returns to its starting position at rapid traverse.

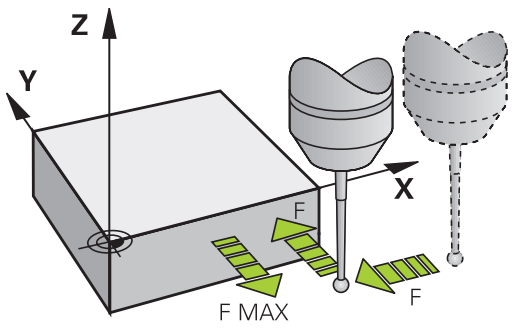

If the stylus is not deflected within a defined distance, the TNC displays an error message (distance: **DIST** from touch probe table).

Consideration of a basic rotation in the Manual Operation mode

During probing the TNC considers an active basic rotation and approaches the workpiece at an angle.

Cycles in the Manual and El. Handwheel modes

In the Manual Operation and El. Handwheel modes, the TNC provides touch probe cycles that allow you to:

- Calibrate the touch probe
- Compensating workpiece misalignment
- Setting datums

Touch probe cycles for automatic operation

Besides the touch probe cycles, which you can use in the Manual and El. Handwheel modes, the TNC provides numerous cycles for a wide variety of applications in automatic mode:

- Calibrating a touch trigger probe
- Compensating workpiece misalignment
- Datum setting
- Automatic workpiece inspection
- Automatic tool measurement

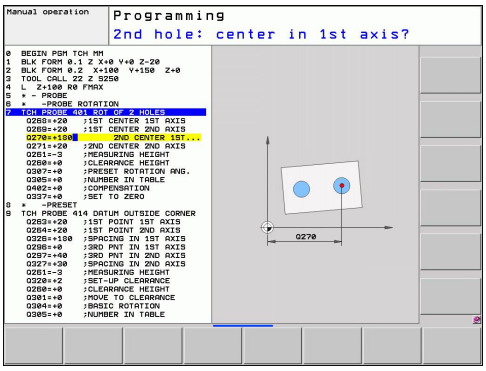

You can program the touch probe cycles in the Programming and Editing operating mode via the TOUCH PROBE key. Like the most recent fixed cycles, touch probe cycles with numbers greater than 400 use Q parameters as transfer parameters. Parameters with specific functions that are required in several cycles always have the same number: For example, Q260 is always assigned the clearance height, Q261 the measuring height, etc.

To simplify programming, the TNC shows a graphic during cycle definition. The graphic shows the parameter that needs to be entered (see figure at right).

Defining the touch probe cycle in the Programming and Editing mode of operation

- The soft-key row shows all available touch probe functions divided into groups.

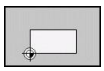

- Select the desired probe cycle group, for example datum setting. Cycles for automatic tool measurement are available only if your machine has been prepared for them.

- Select a cycle, e.g. datum setting at pocket center. The TNC initiates the programming dialog and asks for all required input values. At the same time a graphic of the input parameters is displayed in the right screen window. The parameter that is asked for in the dialog prompt is highlighted.
- Enter all parameters requested by the TNC and conclude each entry with the ENT key.
- The TNC ends the dialog when all required data has been entered

Group of measuring cycles	Soft key	Page
Cycles for automatic measurement and compensation of workpiece misalignment		264
Cycles for automatic workpiece presetting		282
Cycles for automatic workpiece inspection		330
Special cycles	SPECIAL CYCLES	370
Cycles for automatic tool measurement (enabled by the machine tool builder)		384

NC blocks

```
5 TCH PROBE 410 DATUM INSIDE RECTAN.
    Q321=+50   ;CENTER IN 1ST AXIS
    Q322=+50   ;CENTER IN 2ND AXIS
    Q323=60    ;FIRST SIDE LENGTH
    Q324=20    ;2ND SIDE LENGTH
    Q261=-5    ;MEASURING HEIGHT
    Q320=0     ;SET-UP CLEARANCE
    Q260=+20   ;CLEARANCE HEIGHT
    Q301=0     ;MOVE TO CLEARANCE
    Q305=10    ;NO. IN TABLE
    Q331=+0    ;DATUM
    Q332=+0    ;DATUM
    Q303=+1    ;MEAS. VALUE
               TRANSFER
    Q381=1     ;PROBE IN TS AXIS
    Q382=+85   ;1ST CO. FOR TS AXIS
    Q383=+50   ;2ND CO. FOR TS AXIS
    Q384=+0    ;3RD CO. FOR TS AXIS
    Q333=+0    ;DATUM
```

13.2 Before You Start Working with Touch Probe Cycles

To make it possible to cover the widest possible range of applications, machine parameters enable you to determine the behavior common to all touch probe cycles.

Maximum traverse to touch point: DIST in touch probe table

If the stylus is not deflected within the path defined in **DIST**, the TNC outputs an error message.

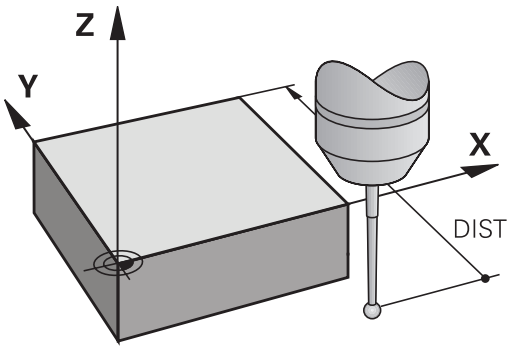

Set-up clearance to touch point: SET_UP in touch probe table

In **SET_UP** you define how far from the defined (or calculated) touch point the TNC is to pre-position the touch probe. The smaller the value you enter, the more exactly you must define the touch point position. In many touch probe cycles you can also define a set-up clearance that is added to **SET_UP**.

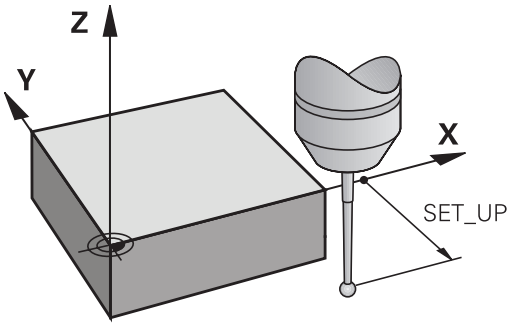

Orient the infrared touch probe to the programmed probe direction: TRACK in touch probe table

To increase measuring accuracy, you can use **TRACK = ON** to have an infrared touch probe oriented in the programmed probe direction before every probe process. In this way the stylus is always deflected in the same direction.

> ⇨ If you change **TRACK = ON**, you must recalibrate the touch probe.

Touch trigger probe, probing feed rate: F in touch probe table

In **F** you define the feed rate at which the TNC is to probe the workpiece.

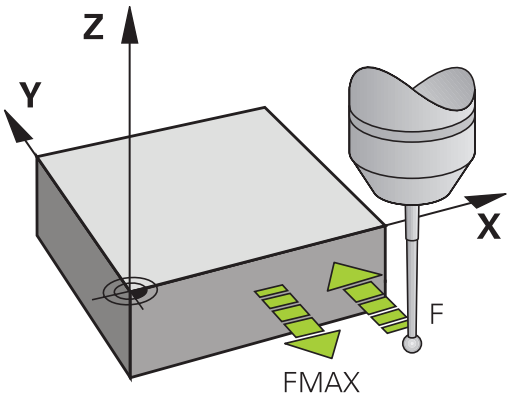

Touch trigger probe, rapid traverse for positioning: FMAX

In **FMAX** you define the feed rate at which the TNC pre-positions the touch probe, or positions it between measuring points.

Touch trigger probe, rapid traverse for positioning: F_PREPOS in touch probe table

In **F_PREPOS** you define whether the TNC is to position the touch probe at the feed rate defined in FMAX or at rapid traverse.

- Input value = **FMAX_PROBE**: Position at feed rate from **FMAX**
- Input value = **FMAX_MACHINE**: Pre-position at rapid traverse

Multiple measurements

To increase measuring certainty, the TNC can run each probing process up to three times in sequence. Define the number of measurements in machine parameter **ProbeSettings** > **Configuration of probe behavior** > **Automatic mode: Multiple measurements with probe function**. If the measured position values differ too greatly, the TNC outputs an error message (the limit value is defined in **Confidence interval of multiple measurements**). With multiple measurement it is possible to detect random errors, e.g. from contamination.

If the measured values lie within the confidence interval, the TNC saves the mean value of the measured positions.

Confidence interval of multiple measurements

When you perform a multiple measurement, you store the value that the measured values may vary in **ProbeSettings** > **Configuration of probe behavior** > **Automatic mode: Confidence interval of multiple measurements**. If the difference in the measured values exceeds the value defined by you, the TNC outputs an error message.

Executing touch probe cycles

All touch probe cycles are DEF active. This means that the TNC runs the cycle automatically as soon as the TNC executes the cycle definition in the program run.

Danger of collision!

When running touch probe cycles, no cycles must be active for coordinate transformation (Cycle 7 DATUM, Cycle 8 MIRROR IMAGE, Cycle 10 ROTATION, and Cycles 11 and 26 SCALING).

You can also run the Touch Probe Cycles 408 to 419 during an active basic rotation. Make sure, however, that the basic rotation angle does not change when you use Cycle 7 DATUM SHIFT with datum tables after the measuring cycle.

Touch probe cycles with a number greater than 400 position the touch probe according to a positioning logic:

- If the current coordinate of the south pole of the stylus is less than the coordinate of the clearance height (defined in the cycle), the TNC retracts the touch probe in the probe axis to the clearance height and then positions it in the working plane to the first starting position.
- If the current coordinate of the stylus south pole is greater than the coordinate of the clearance height, then the TNC first positions the touch probe to the first probe point in the working plane, and then in the touch-probe axis directly to the measuring height.

13.3 Touch probe table

General information

Various data is stored in the touch probe table that defines the probe behavior during the probing process. If you run several touch probes on your machine tool, you can save separate data for each touch probe.

Editing touch probe tables

To edit the touch probe table, proceed as follows:

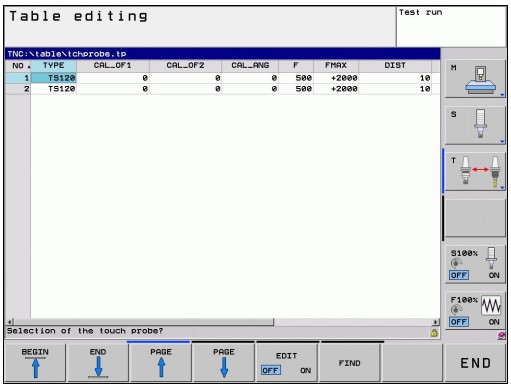

- Select the Manual Operation mode.

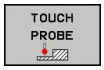

- Select the touch probe functions by pressing the TOUCH PROBE soft key. The TNC displays additional soft keys: see table above

- Select the touch probe table: Press the TCH PROBE TABLE soft key

- Set the EDIT soft key to ON
- Using the arrow keys, select the desired setting.
- Perform desired changes.
- Exit the touch probe table: Press the END soft key

Touch probe data

Abbr.	Inputs	Dialog
NO	Number of the touch probe: Enter this number in the tool table (column: **TP_NO**) under the appropriate tool number	–
TYPE	Selection of the touch probe used	**Selection of touch probe?**
CAL_OF1	Offset of the touch probe axis to the spindle axis for the reference axis	**TS center misalignmt. ref. axis? [mm]**
CAL_OF2	Offset of the touch probe axis to the spindle axis for the minor axis	**TS center misalignmt. aux. axis? [mm]**
CAL_ANG	The TNC orients the touch probe to the orientation angle before calibration or probing (if orientation is possible)	**Spindle angle for calibration?**
F	Feed rate at which the TNC is to probe the workpiece	**Probing feed rate? [mm/min]**
FMAX	Feed rate at which the touch probe pre-positions, or is positioned between the measuring points	**Rapid traverse in probing cycle? [mm/min]**
DIST	If the stylus is not deflected within the defined path, the TNC outputs an error message	**Maximum measuring path? [mm]**
SET_UP	In **SET_UP** you define how far from the defined (or calculated) touch point the TNC is to pre-position the touch probe. The smaller the value you enter, the more exactly you must define the touch point position. In many touch probe cycles you can also define a set-up clearance that is added to the **SET_UP** machine parameter.	**Set-up clearance? [mm]**
F_PREPOS	Defining speed with pre-positioning: ■ Pre-positioning with speed from **FMAX**: **FMAX_PROBE** ■ Pre-positioning with machine rapid traverse: **FMAX_MACHINE**	**Pre-positioning at rap. traverse? ENT/NO ENT**
TRACK	To increase measuring accuracy, you can use **TRACK = ON** to have an infrared touch probe oriented in the programmed probe direction before every probe process. In this way the stylus is always deflected in the same direction: ■ **ON**: Perform spindle tracking ■ **OFF**: Do not perform spindle tracking	**Orient touch probe cycles? Yes=ENT, No=NOENT**

14

Touch Probe Cycles: Automatic Measurement of Workpiece Misalignment

14.1 Fundamentals

Overview

When running touch probe cycles, Cycle 8 MIRROR IMAGE, Cycle 11 SCALING and Cycle 26 AXIS-SPECIFIC SCALING must not be active.

HEIDENHAIN only gives warranty for the function of the probing cycles if HEIDENHAIN touch probes are used.

The TNC must be specially prepared by the machine tool builder for the use of a 3-D touch probe.

Refer to your machine manual.

The TNC provides five cycles that enable you to measure and compensate workpiece misalignment. In addition, you can reset a basic rotation with Cycle 404:

Cycle	Soft key	Page
400 BASIC ROTATION Automatic measurement using two points. Compensation via basic rotation.	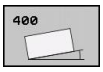	266
401 ROT OF 2 HOLES Automatic measurement using two holes. Compensation via basic rotation.	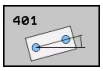	268
402 ROT OF 2 STUDS Automatic measurement using two studs. Compensation via basic rotation.	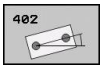	270
403 ROT IN ROTARY AXIS Automatic measurement using two points. Compensation by turning the table.		273
405 ROT IN C AXIS Automatic alignment of an angular offset between a hole center and the positive Y axis. Compensation via table rotation.		277
404 SET BASIC ROTATION Setting any basic rotation.	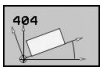	276

Characteristics common to all touch probe cycles for measuring workpiece misalignment

For Cycles 400, 401 and 402 you can define through parameter Q307 **Default setting for basic rotation** whether the measurement result is to be corrected by a known angle # (see figure at right). This enables you to measure the basic rotation against any straight line **1** of the workpiece and to establish the reference to the actual 0° direction **2**.

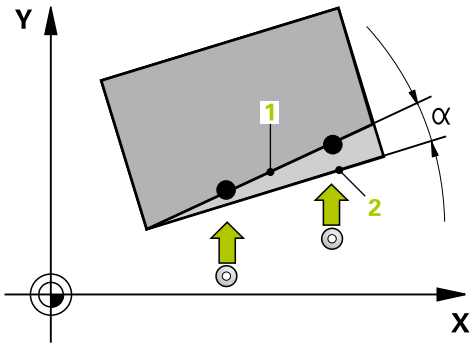

14.2 BASIC ROTATION (Cycle 400, DIN/ISO: G400)

Cycle run

Touch probe cycle 400 determines a workpiece misalignment by measuring two points, which must lie on a straight surface. With the basic rotation function the TNC compensates the measured value.

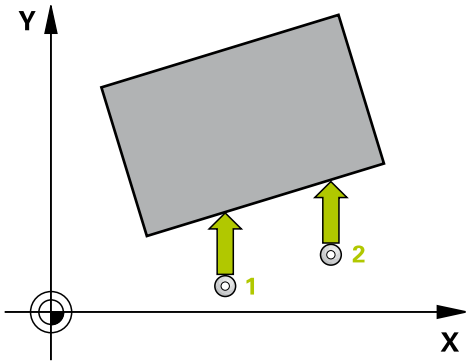

1 The TNC positions the touch probe at rapid traverse (value from **FMAX** column) following the positioning logic (See "Executing touch probe cycles", page 259) to the starting point **1**. The TNC offsets the touch probe by the safety clearance in the direction opposite to the defined traverse direction.
2 Then the touch probe moves to the entered measuring height and runs the first probing process at the probing feed rate (column **F**).
3 Then the touch probe moves to the next starting position **2** and probes the second position.
4 The TNC returns the touch probe to the clearance height and performs the basic rotation.

Please note while programming:

Before a cycle definition you must have programmed a tool call to define the touch probe axis.

The TNC will reset an active basic rotation at the beginning of the cycle.

Cycle parameters

- **1st meas. point 1st axis** Q263 (absolute): Coordinate of the first touch point in the reference axis of the working plane. Input range -99999.9999 to 99999.9999
- **1st meas. point 2nd axis** Q264 (absolute): Coordinate of the first touch point in the minor axis of the working plane. Input range -99999.9999 to 99999.9999
- **2nd meas. point 1st axis** Q265 (absolute): Coordinate of the second touch point in the reference axis of the working plane. Input range -99999.9999 to 99999.9999
- **2nd meas. point 2nd axis** Q266 (absolute): Coordinate of the second touch point in the minor axis of the working plane. Input range -99999.9999 to 99999.9999
- **Measuring axis** Q272: Axis in the working plane in which the measurement is to be made:
  1: Principal axis = measuring axis
  2: Secondary axis = measuring axis

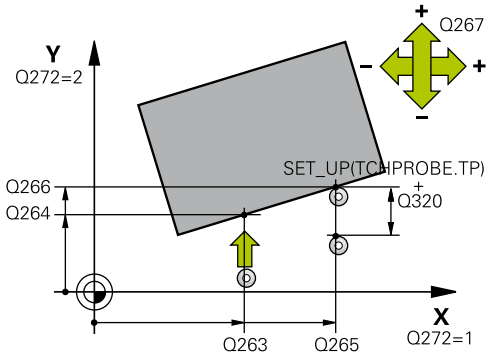

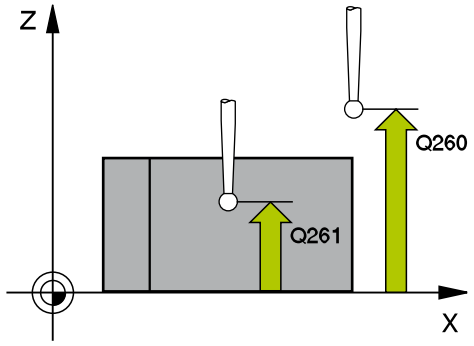

- **Traverse direction 1** Q267: Direction in which the probe is to approach the workpiece:
  -1: Negative Traverse direction
  +1: Positive traverse direction
- **Measuring height in the touch probe axis** Q261 (absolute): Coordinate of the ball tip center (= touch point) in the touch probe axis in which the measurement is to be made. Input range -99999.9999 to 99999.9999
- **Set-up clearance** Q320 (incremental): Additional distance between measuring point and ball tip. Q320 is added to **SET_UP** (touch probe table). Input range 0 to 99999.9999
- **Clearance height** Q260 (absolute): Coordinate in the touch probe axis at which no collision between touch probe and workpiece (fixtures) can occur. Input range -99999.9999 to 99999.9999
- **Traversing to clearance height** Q301: definition of how the touch probe is to move between the measuring points:
  0: Move at measuring height between measuring points
  1: Move at clearance height between measuring points
- **Preset value for rotation angle** Q307 (absolute): If the misalignment is to be measured against a straight line other than the reference axis, enter the angle of this reference line. The TNC will then calculate the difference between the value measured and the angle of the reference line for the basic rotation. Input range -360.000 to 360.000
- **Preset number in table** Q305: Enter the preset number in the table in which the TNC is to save the determined basic rotation. If you enter Q305=0, the TNC automatically places the determined basic rotation in the ROT menu of the Manual Operation mode. Input range 0 to 2999

NC blocks

```
5 TCH PROBE 400 BASIC ROTATION
    Q263=+10  ;1ST POINT 1ST AXIS
    Q264=+3.5 ;1ST POINT 2ND AXIS
    Q265=+25  ;2ND POINT 1ST AXIS
    Q266=+2   ;2ND POINT 2ND AXIS
    Q272=2    ;MEASURING AXIS
    Q267=+1   ;TRAVERSE DIRECTION
    Q261=-5   ;MEASURING HEIGHT
    Q320=0    ;SET-UP CLEARANCE
    Q260=+20  ;CLEARANCE HEIGHT
    Q301=0    ;MOVE TO CLEARANCE
    Q307=0    ;PRESET ROT. ANGLE
    Q305=0    ;NO. IN TABLE
```

14.3 BASIC ROTATION over two holes (Cycle 401, DIN/ISO: G401)

Cycle run

The Touch Probe Cycle 401 measures the centers of two holes. Then the TNC calculates the angle between the reference axis in the working plane and the line connecting the hole centers. With the basic rotation function, the TNC compensates the calculated value. As an alternative, you can also compensate the determined misalignment by rotating the rotary table.

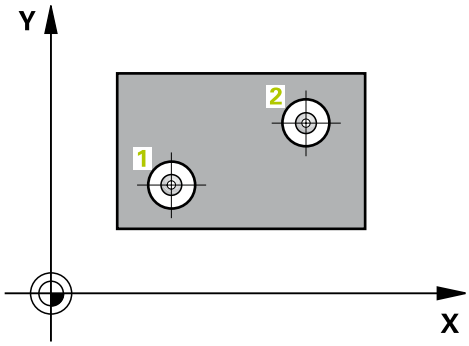

1 Following the positioning logic (See "Executing touch probe cycles", page 259), the control positions the touch probe at rapid traverse (value from column **FMAX**) to the center of the first hole **1**.
2 Then the probe moves to the entered measuring height and probes four points to find the first hole center.
3 The touch probe returns to the clearance height and then to the position entered as center of the second hole **2**.
4 The TNC moves the touch probe to the entered measuring height and probes four points to find the second hole center.
5 Then the TNC returns the touch probe to the clearance height and performs the basic rotation.

Please note while programming:

Before a cycle definition you must have programmed a tool call to define the touch probe axis.

The TNC will reset an active basic rotation at the beginning of the cycle.

If you want to compensate the misalignment by rotating the rotary table, the TNC will automatically use the following rotary axes:

- C for tool axis Z
- B for tool axis Y
- A for tool axis X

Cycle parameters

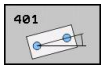

- **1st hole: Center in 1st axis** Q268 (absolute): Center of the first hole in the reference axis of the working plane. Input range -99999.9999 to 99999.9999
- **1st hole: Center in 2nd axis** Q269 (absolute): Center of the first hole in the minor axis of the working plane. Input range -99999.9999 to 99999.9999
- **2nd hole: Center in 1st axis** Q270 (absolute): Center of the second hole in the reference axis of the working plane. Input range -99999.9999 to 99999.9999

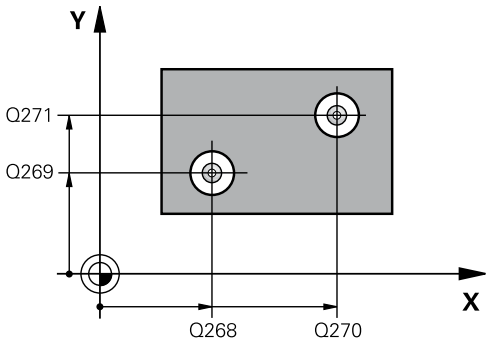

- **2nd hole: Center in 2nd axis** Q271 (absolute): Center of the second hole in the minor axis of the working plane. Input range -99999.9999 to 99999.9999
- **Measuring height in the touch probe axis** Q261 (absolute): Coordinate of the ball tip center (= touch point) in the touch probe axis in which the measurement is to be made. Input range -99999.9999 to 99999.9999
- **Clearance height** Q260 (absolute): Coordinate in the touch probe axis at which no collision between touch probe and workpiece (fixtures) can occur. Input range -99999.9999 to 99999.9999
- **Preset value for rotation angle** Q307 (absolute): If the misalignment is to be measured against a straight line other than the reference axis, enter the angle of this reference line. The TNC will then calculate the difference between the value measured and the angle of the reference line for the basic rotation. Input range -360.000 to 360.000
- **Preset number in table** Q305: Enter the preset number in the table in which the TNC is to save the determined basic rotation. If you enter Q305=0, the TNC automatically places the determined basic rotation in the ROT menu of the Manual Operation mode. The parameter has no effect if the misalignment is to be compensated by a rotation of the rotary table (**Q402=1**). In this case the misalignment is not saved as an angular value. Input range 0 to 2999
- **Compensation** Q402: Define whether the TNC should set the measured misalignment as basic rotation or should align via rotating the rotary table:
  0: Set basic rotation
  1: Rotate the rotary table
  If you specify rotating the rotary table, the TNC does not save the measured misalignment, even if you have defined a table row in parameter **Q305**.
- **Set to zero after alignment** Q337: Define whether the TNC should set the display of the aligned rotary axis to 0:
  0: Do not set the rotary axis display to 0 after alignment
  1: Set the rotary axis display to 0 after alignment. The TNC only sets the display to 0 if you have set **Q402=1**.

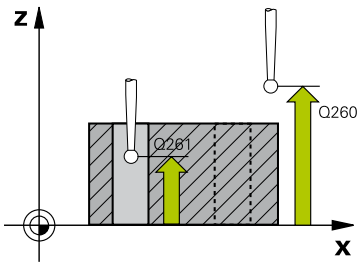

NC blocks

5 TCH PROBE 401 ROT OF 2 HOLES	
Q268=-37	;1ST CENTER IN 1ST AXIS
Q269=+12	;1ST CENTER 2ND AXIS
Q270=+75	;2ND CENTER 1ST AXIS
Q271=+20	;2ND CENTER 2ND AXIS
Q261=-5	;MEASURING HEIGHT
Q260=+20	;CLEARANCE HEIGHT
Q307=0	;PRESET ROT. ANGLE
Q305=0	;NO. IN TABLE
Q402=0	;COMPENSATION
Q337=0	;ZERO RESET

14.4 BASIC ROTATION over two studs (Cycle 402, DIN/ISO: G402)

Cycle run

The Touch Probe Cycle 402 measures the centers of two studs. Then the TNC calculates the angle between the reference axis in the working plane and the line connecting the two stud centers. With the basic rotation function, the TNC compensates the calculated value. As an alternative, you can also compensate the determined misalignment by rotating the rotary table.

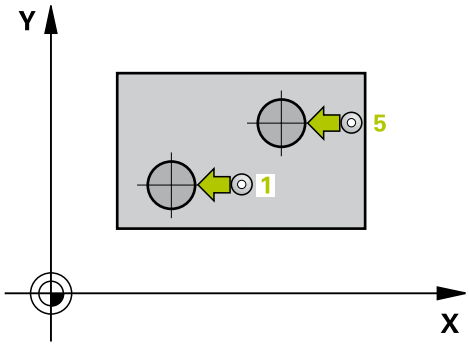

1 Following the positioning logic (See "Executing touch probe cycles", page 259), the TNC positions the touch probe at rapid traverse (value from column FMAX) to the starting point **1** of the first stud.
2 Then the probe moves to the entered **measuring height 1** and probes four points to find the center of the first stud. The touch probe moves on a circular arc between the touch points, each of which is offset by 90°.
3 The touch probe returns to the clearance height and then positions the probe to starting point **5** of the second stud.
4 The probe moves to the entered **measuring height 2** and probes four points to find the center of the second stud.
5 Then the TNC returns the touch probe to the clearance height and performs the basic rotation.

Please note while programming:

Before a cycle definition you must have programmed a tool call to define the touch probe axis.

The TNC will reset an active basic rotation at the beginning of the cycle.

If you want to compensate the misalignment by rotating the rotary table, the TNC will automatically use the following rotary axes:

- C for tool axis Z
- B for tool axis Y
- A for tool axis X

Cycle parameters

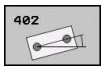

- **1st stud: Center in 1st axis** Q268 (absolute): Center of the first stud in the reference axis of the working plane. Input range -99999.9999 to 99999.9999
- **1st stud: Center in 2nd axis** Q269 (absolute): Center of the first stud in the minor axis of the working plane. Input range -99999.9999 to 99999.9999
- **Diameter of stud 1** Q313: Approximate diameter of the 1st stud. Enter a value that is more likely to be too large than too small. Input range 0 to 99999.9999
- **Measuring height 1 in the probe axis** Q261 (absolute): Coordinate of the ball tip center (= touch point in the touch probe axis) at which stud 1 is to be measured. Input range -99999.9999 to 99999.9999
- **2nd stud: Center in 1st axis** Q270 (absolute): Center of the second stud in the reference axis of the working plane. Input range -99999.9999 to 99999.9999
- **2nd stud: Center in 2nd axis** Q271 (absolute): Center of the second stud in the minor axis of the working plane. Input range -99999.9999 to 99999.9999
- **Diameter of stud 2** Q314: Approximate diameter of the 2nd stud. Enter a value that is more likely to be too large than too small. Input range 0 to 99999.9999
- **Measuring height of stud 2 in the probe axis** Q315 (absolute): Coordinate of the ball tip center (= touch point in the touch probe axis) at which stud 2 is to be measured. Input range -99999.9999 to 99999.9999
- **Set-up clearance** Q320 (incremental): Additional distance between measuring point and ball tip. Q320 is added to **SET_UP** (touch probe table). Input range 0 to 99999.9999
- **Clearance height** Q260 (absolute): Coordinate in the touch probe axis at which no collision between touch probe and workpiece (fixtures) can occur. Input range -99999.9999 to 99999.9999

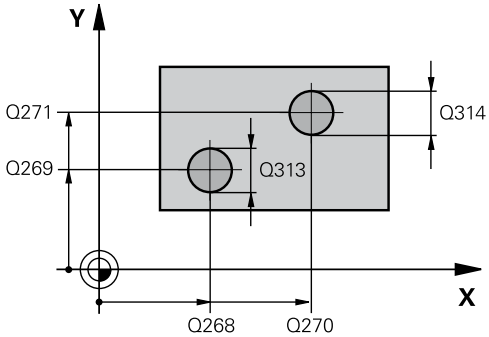

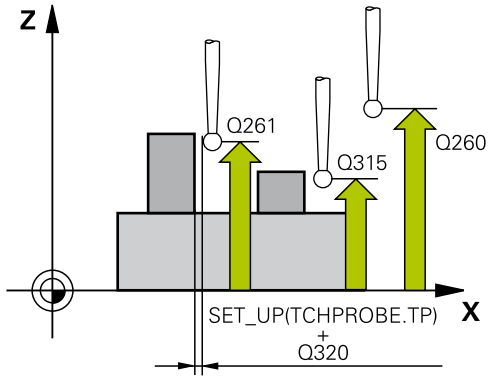

NC blocks

5 TCH PROBE 402 ROT OF 2 STUDS	
Q268=-37	;1ST CENTER IN 1ST AXIS
Q269=+12	;1ST CENTER 2ND AXIS
Q313=60	;DIAMETER OF STUD 1
Q261=-5	;MEASURING HEIGHT 1
Q270=+75	;2ND CENTER 1ST AXIS
Q271=+20	;2ND CENTER 2ND AXIS
Q314=60	;DIAMETER OF STUD 2
Q315=-5	;MEASURING HEIGHT 2
Q320=0	;SET-UP CLEARANCE
Q260=+20	;CLEARANCE HEIGHT
Q301=0	;MOVE TO CLEARANCE
Q307=0	;PRESET ROT. ANGLE
Q305=0	;NO. IN TABLE
Q402=0	;COMPENSATION
Q337=0	;ZERO RESET

- **Traversing to clearance height** Q301: definition of how the touch probe is to move between the measuring points:
  0: Move at measuring height between measuring points
  1: Move at clearance height between measuring points
- **Preset value for rotation angle** Q307 (absolute): If the misalignment is to be measured against a straight line other than the reference axis, enter the angle of this reference line. The TNC will then calculate the difference between the value measured and the angle of the reference line for the basic rotation. Input range -360.000 to 360.000
- **Preset number in table** Q305: Enter the preset number in the table in which the TNC is to save the determined basic rotation. If you enter Q305=0, the TNC automatically places the determined basic rotation in the ROT menu of the Manual Operation mode. The parameter has no effect if the misalignment is to be compensated by a rotation of the rotary table (**Q402=1**). In this case the misalignment is not saved as an angular value. Input range 0 to 2999
- **Compensation** Q402: Define whether the TNC should set the measured misalignment as basic rotation or should align via rotating the rotary table:
  0: Set basic rotation
  1: Rotate the rotary table
  If you specify rotating the rotary table, the TNC does not save the measured misalignment, even if you have defined a table row in parameter **Q305**.
- **Set to zero after alignment** Q337: Define whether the TNC should set the display of the aligned rotary axis to 0:
  0: Do not set the rotary axis display to 0 after alignment
  1: Set the rotary axis display to 0 after alignment. The TNC only sets the display to 0 if you have set **Q402=1**.

14.5 BASIC ROTATION compensation via rotary axis (Cycle 403, DIN/ISO: G403)

Cycle run

Touch Probe Cycle 403 determines a workpiece misalignment by measuring two points, which must lie on a straight surface. The TNC compensates the determined misalignment by rotating the A, B or C axis. The workpiece can be clamped in any position on the rotary table.

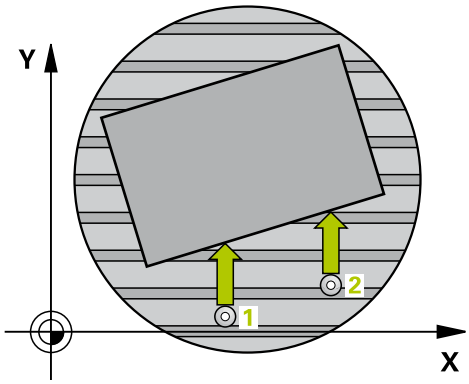

1 The TNC positions the touch probe at rapid traverse (value from **FMAX** column) following the positioning logic (See "Executing touch probe cycles", page 259) to the starting point **1**. The TNC offsets the touch probe by the safety clearance in the direction opposite to the defined traverse direction.
2 Then the touch probe moves to the entered measuring height and runs the first probing process at the probing feed rate (column **F**).
3 Then the touch probe moves to the next starting position **2** and probes the second position.
4 The TNC returns the touch probe to the clearance height and moves the rotary axis, which was defined in the cycle, by the measured value. Optionally you can have the display set to 0 after alignment.

Please note while programming:

! **Danger of collision!**
The TNC does not check whether touch points and compensation axis match. This can result in compensation movements offset by 180°.

⇨ Before a cycle definition you must have programmed a tool call to define the touch probe axis.
The TNC stores the measured angle in parameter **Q150**.

14.5 BASIC ROTATION compensation via rotary axis (Cycle 403, DIN/ISO: G403)

Cycle parameters

- **1st meas. point 1st axis** Q263 (absolute): Coordinate of the first touch point in the reference axis of the working plane. Input range -99999.9999 to 99999.9999
- **1st meas. point 2nd axis** Q264 (absolute): Coordinate of the first touch point in the minor axis of the working plane. Input range -99999.9999 to 99999.9999
- **2nd meas. point 1st axis** Q265 (absolute): Coordinate of the second touch point in the reference axis of the working plane. Input range -99999.9999 to 99999.9999
- **2nd meas. point 2nd axis** Q266 (absolute): Coordinate of the second touch point in the minor axis of the working plane. Input range -99999.9999 to 99999.9999
- **Measuring axis (1...3: 1 = principal axis)** Q272: Axis in which the measurement is to be made:
  1: Principal axis = measuring axis
  2: Secondary axis = measuring axis
  3: Touch probe axis = measuring axis
- **Traverse direction 1** Q267: Direction in which the probe is to approach the workpiece:
  -1: Negative Traverse direction
  +1: Positive traverse direction
- **Measuring height in the touch probe axis** Q261 (absolute): Coordinate of the ball tip center (= touch point) in the touch probe axis in which the measurement is to be made. Input range -99999.9999 to 99999.9999
- **Set-up clearance** Q320 (incremental): Additional distance between measuring point and ball tip. Q320 is added to **SET_UP** (touch probe table). Input range 0 to 99999.9999
- **Clearance height** Q260 (absolute): Coordinate in the touch probe axis at which no collision between touch probe and workpiece (fixtures) can occur. Input range -99999.9999 to 99999.9999
- **Traversing to clearance height** Q301: definition of how the touch probe is to move between the measuring points:
  0: Move at measuring height between measuring points
  1: Move at clearance height between measuring points

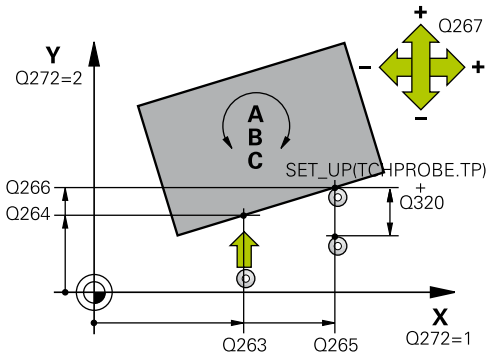

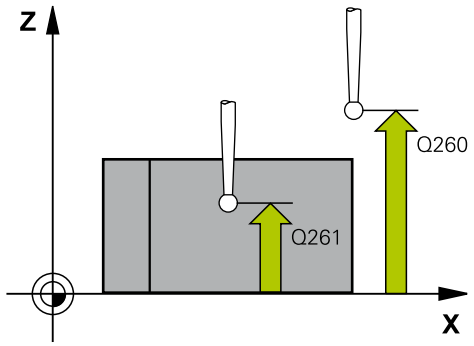

NC blocks

5 TCH PROBE 403 ROT IN ROTARY AXIS	
Q263=+0	;1ST POINT 1ST AXIS
Q264=+0	;1ST POINT 2ND AXIS
Q265=+20	;2ND POINT 1ST AXIS
Q266=+30	;2ND POINT 2ND AXIS
Q272=1	;MEASURING AXIS
Q267=-1	;TRAVERSE DIRECTION
Q261=-5	;MEASURING HEIGHT
Q320=0	;SET-UP CLEARANCE
Q260=+20	;CLEARANCE HEIGHT
Q301=0	;MOVE TO CLEARANCE
Q312=6	;COMPENSATION AXIS
Q337=0	;ZERO RESET
Q305=1	;NO. IN TABLE
Q303=+1	;MEAS. VALUE TRANSFER
Q380=+90	;REFERENCE ANGLE

- **Axis for compensation movement** Q312: Define which rotary axis the TNC uses to compensate the measured misalignment:
  4: Compensate misalignment with rotary axis A
  5: Compensate misalignment with rotary axis B
  6: Compensate misalignment with rotary axis C
- **Set to zero after alignment** Q337: Define whether the TNC should set the display of the aligned rotary axis to 0:
  0: Do not set the rotary axis display to 0 after alignment
  1: Set the rotary axis display to 0 after alignment.
- **Number in table** Q305: Enter the number in the preset table/datum table in which the TNC is to set the rotary axis to zero. Only effective if Q337 is set to 1. Input range 0 to 2999
- **Measured value transfer (0, 1)** Q303: Specify if the determined basic rotation is to be saved in the datum table or in the preset table:
  0: Write the measured basic rotation as datum shift active datum table. The reference system is the active workpiece coordinate system
  1: Write the measured basic rotation into the preset table. The reference system is the machine coordinate system (REF system).
- **Reference angle? (0=ref. axis)** Q380: Angle with which the TNC is to align the probed straight line. Only effective if the rotary axis C is selected (Q312=6). Input range -360.000 to 360.000

14.6 SET BASIC ROTATION (Cycle 404, DIN/ISO: G404)

Cycle run

With Touch Probe Cycle 404, you can set any basic rotation automatically during program run. This cycle is intended primarily for resetting a previous basic rotation.

NC blocks

```
5 TCH PROBE 404 BASIC ROTATION
    Q307=+0    ;PRESET ROT. ANGLE
```

Cycle parameters

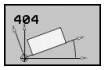

- **Preset value for rotation angle**: Angular value at which the basic rotation is to be set. Input range -360.000 to 360.000

14.7 Compensating workpiece misalignment by rotating the C axis (Cycle 405, DIN/ISO: G405)

Cycle run

With Touch Probe Cycle 405, you can measure

- the angular offset between the positive Y axis of the active coordinate system and the center of a hole, or
- the angular offset between the nominal position and the actual position of a hole center.

The TNC compensates the determined angular offset by rotating the C axis. The workpiece can be clamped in any position on the rotary table, but the Y coordinate of the hole must be positive.
If you measure the angular misalignment of the hole with touch probe axis Y (horizontal position of the hole), it may be necessary to execute the cycle more than once because the measuring strategy causes an inaccuracy of approx. 1% of the misalignment.

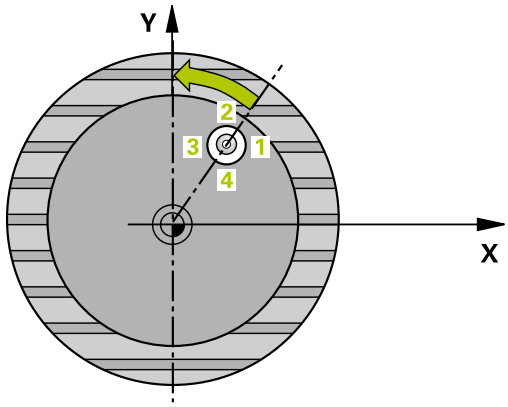

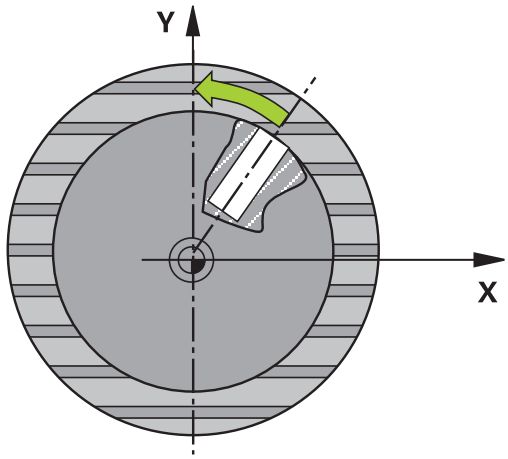

1 The TNC positions the touch probe at rapid traverse (value from **FMAX** column) following the positioning logic (See "Executing touch probe cycles", page 259) to the starting point **1**. The TNC calculates the touch points from the data in the cycle and the safety clearance from the **SET_UP** column of the touch probe table.
2 Then the touch probe moves to the entered measuring height and runs the first probing process at the probing feed rate (column **F**). The TNC derives the probing direction automatically from the programmed starting angle.
3 Then the touch probe moves in a circular arc either at measuring height or at clearance height to the next starting point **2** and probes the second touch point.
4 The TNC positions the touch probe to starting point **3** and then to starting point **4** to probe the third and fourth touch points and positions the touch probe on the hole center measured.
5 Finally the TNC returns the touch probe to the clearance height and and aligns the workpiece by rotating the table.
The TNC rotates the rotary table so that the hole center after compensation lies in the direction of the positive Y axis, or on the nominal position of the hole center—both with a vertical and horizontal touch probe axis. The measured angular misalignment is also available in parameter Q150.

14.7 Compensating workpiece misalignment by rotating the C axis (Cycle 405, DIN/ISO: G405)

Please note while programming:

Danger of collision!

To prevent a collision between the touch probe and the workpiece, enter a **low** estimate for the nominal diameter of the pocket (or hole).

If the dimensions of the pocket and the safety clearance do not permit pre-positioning in the proximity of the touch points, the TNC always starts probing from the center of the pocket. In this case the touch probe does not return to the clearance height between the four measuring points.

Before a cycle definition you must have programmed a tool call to define the touch probe axis.

The smaller the angle, the less accurately the TNC can calculate the circle center. Minimum input value: 5°.

Cycle parameters

- **Center in 1st axis** Q321 (absolute): Center of the hole in the reference axis of the working plane. Input range -99999.9999 to 99999.9999
- **Center in 2nd axis** Q322 (absolute value): Center of the hole in the minor axis of the working plane. If you program Q322 = 0, the TNC aligns the hole center to the positive Y axis. If you program Q322 not equal to 0, then the TNC aligns the hole center to the nominal position (angle of the hole center). Input range -99999.9999 to 99999.9999
- **Nominal diameter** Q262: Approximate diameter of the circular pocket (or hole). Enter a value that is more likely to be too small than too large. Input range 0 to 99999.9999
- **Starting angle** Q325 (absolute): Angle between the reference axis of the working plane and the first touch point. Input range -360.000 to 360.000

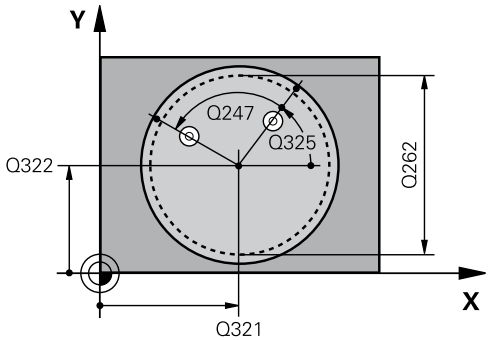

- **Stepping angle** Q247 (incremental): Angle between two measuring points. The algebraic sign of the stepping angle determines the direction of rotation (negative = clockwise) in which the touch probe moves to the next measuring point. If you wish to probe a circular arc instead of a complete circle, then program the stepping angle to be less than 90°. Input range -120.000 to 120.000
- **Measuring height in the touch probe axis** Q261 (absolute): Coordinate of the ball tip center (= touch point) in the touch probe axis in which the measurement is to be made. Input range -99999.9999 to 99999.9999
- **Set-up clearance** Q320 (incremental): Additional distance between measuring point and ball tip. Q320 is added to **SET_UP** (touch probe table). Input range 0 to 99999.9999
- **Clearance height** Q260 (absolute): Coordinate in the touch probe axis at which no collision between touch probe and workpiece (fixtures) can occur. Input range -99999.9999 to 99999.9999
- **Traversing to clearance height** Q301: definition of how the touch probe is to move between the measuring points:
  0: Move at measuring height between measuring points
  1: Move at clearance height between measuring points
- **Set to zero after alignment** Q337: definition of whether the TNC should set the display of the C-axis to zero, or write the angular misalignment in column C of the datum table:
  0: Set the display of the C-axis to zero
  >0: Write the measured angular misalignment with correct algebraic signs in the datum table. Line number = value of Q337. If a C-axis shift is registered in the datum table, the TNC adds the measured angular misalignment.

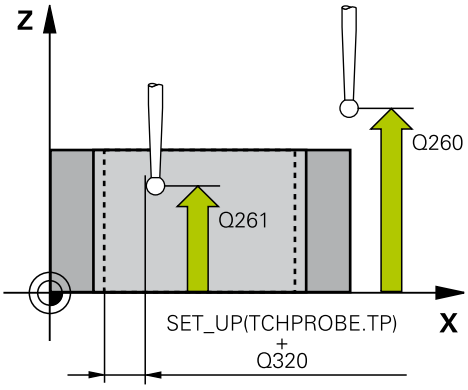

NC blocks

```
5 TCH PROBE 405 ROT IN C AXIS
    Q321=+50   ;CENTER IN 1ST AXIS
    Q322=+50   ;CENTER IN 2ND AXIS
    Q262=10    ;NOMINAL DIAMETER
    Q325=+0    ;STARTING ANGLE
    Q247=90    ;STEPPING ANGLE
    Q261=-5    ;MEASURING HEIGHT
    Q320=0     ;SET-UP CLEARANCE
    Q260=+20   ;CLEARANCE HEIGHT
    Q301=0     ;MOVE TO CLEARANCE
    Q337=0     ;ZERO RESET
```

14.8 Example: Determining a basic rotation from two holes

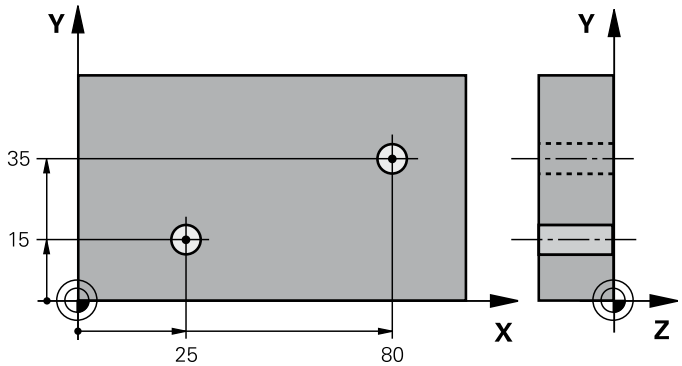

0 BEGIN PGM CYC401 MM		
1 TOOL CALL 69 Z		
2 TCH PROBE 401 ROT OF 2 HOLES		
Q268=+25	;1ST CENTER 1ST AXIS	Center of the 1st hole: X coordinate
Q269=+15	;1ST CENTER 2ND AXIS	Center of the 1st hole: Y coordinate
Q270=+80	;2ND CENTER 1ST AXIS	Center of the 2nd hole: X coordinate
Q271=+35	;2ND CENTER 2ND AXIS	Center of the 2nd hole: Y coordinate
Q261=-5	;MEASURING HEIGHT	Coordinate in the touch probe axis in which the measurement is made
Q260=+20	;CLEARANCE HEIGHT	Height in the touch probe axis at which the probe can traverse without collision
Q307=+0	;PRESET ROT. ANGLE	Angle of the reference line
Q402=1	;COMPENSATION	Compensate misalignment by rotating the rotary table
Q337=1	;ZERO RESET	Set the display to zero after the alignment
3 CALL PGM 35K47		Call part program
4 END PGM CYC401 MM		

15

Touch Probe Cycles: Automatic Datum Setting

15.1 Fundamentals

Overview

When running touch probe cycles, Cycle 8 MIRROR IMAGE, Cycle 11 SCALING and Cycle 26 AXIS-SPECIFIC SCALING must not be active.

HEIDENHAIN only gives warranty for the function of the probing cycles if HEIDENHAIN touch probes are used.

The TNC must be specially prepared by the machine tool builder for the use of a 3-D touch probe.

Refer to your machine manual.

The TNC offers twelve cycles for automatically finding reference points and handling them as follows:

- Setting the determined values directly as display values
- Entering the determined values in the preset table
- Entering the determined values in a datum table

Cycle	Soft key	Page
408 SLOT CENTER REF PT. Measuring the inside width of a slot, and defining the slot center as datum	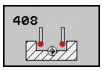	286
409 RIDGE CENTER REF PT. Measuring the outside width of a ridge, and defining the ridge center as datum	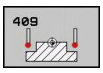	289
410 DATUM INSIDE RECTANGLE Measuring the inside length and width of a rectangle, and defining the center as datum		292
411 DATUM OUTSIDE RECTANGLE Measuring the outside length and width of a rectangle, and defining the center as datum		296
412 DATUM INSIDE CIRCLE Measuring any four points on the inside of a circle, and defining the center as datum		300
413 DATUM OUTSIDE CIRCLE Measuring any four points on the outside of a circle, and defining the center as datum		304
414 DATUM OUTSIDE CORNER Measuring two lines from the outside of the angle, and defining the intersection as datum		308
415 DATUM INSIDE CORNER Measuring two lines from within the angle, and defining the intersection as datum		312
416 DATUM CIRCLE CENTER (2nd soft-key level) Measuring any three holes on a bolt hole circle, and defining the bolt-hole center as datum	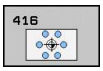	315
417 DATUM IN TS AXIS (2nd soft-key level) Measuring any position in the touch probe axis and defining it as datum	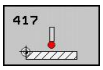	318
418 DATUM FROM 4 HOLES (2nd soft-key level) Measuring 4 holes crosswise and defining the intersection of the lines between them as datum	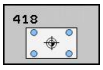	320
419 DATUM IN ONE AXIS (2nd soft-key row) Measuring any position in any axis and defining it as datum	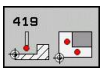	323

Characteristics common to all touch probe cycles for datum setting

You can also run the Touch Probe Cycles 408 to 419 during an active rotation (basic rotation or Cycle 10).

Datum point and touch probe axis

From the touch probe axis that you have defined in the measuring program the TNC determines the working plane for the datum.

Active touch probe axis	Datum setting in
Z	X and Y
Y	Z and X
X	Y and Z

Saving the calculated datum

In all cycles for datum setting you can use the input parameters Q303 and Q305 to define how the TNC is to save the calculated datum:

- **Q305 = 0, Q303 = any value**: The TNC sets the calculated datum in the display. The new datum is active immediately. At the same time, the TNC saves the datum set in the display by the cycle in line 0 of the preset table.
- **Q305 not equal to 0, Q303 = –1**

This combination can only occur if you

- read in programs containing Cycles 410 to 418 created on a TNC 4xx
- read in programs containing Cycles 410 to 418 created with an older software version on an iTNC 530
- did not specifically define the measured-value transfer with parameter Q303 when defining the cycle.

In these cases the TNC outputs an error message, since the complete handling of REF-referenced datum tables has changed. You must define a measured-value transfer yourself with parameter Q303.

- **Q305 not equal to 0, Q303 = 0** The TNC writes the calculated reference point in the active datum table. The reference system is the active workpiece coordinate system. The value of parameter Q305 determines the datum number. **Activate the datum with Cycle 7 in the part program.**
- **Q305 not equal to 0, Q303 = 1** The TNC writes the calculated reference point in the preset table. The reference system is the machine coordinate system (REF coordinates). The value of parameter Q305 determines the preset number. **Activate the preset with Cycle 247 in the part program.**

Measurement results in Q parameters

The TNC saves the measurement results of the respective touch probe cycle in the globally effective Q parameters Q150 to Q160. You can use these parameters in your program. Note the table of result parameters listed with every cycle description.

15.2 DATUM SLOT CENTER (Cycle 408, DIN/ ISO: G408)

Cycle run

Touch Probe Cycle 408 finds the center of a slot and defines its center as datum. If desired, the TNC can also enter the coordinates into a datum table or the preset table.

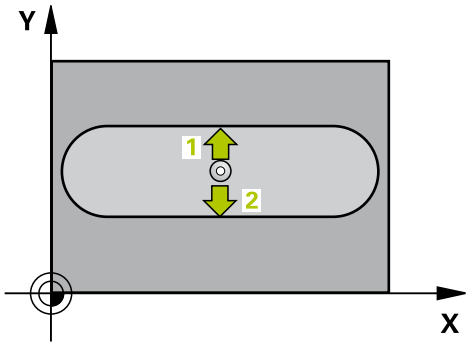

1 The TNC positions the touch probe at rapid traverse (value from **FMAX** column) following the positioning logic (See "Executing touch probe cycles", page 259) to the starting point **1**. The TNC calculates the touch points from the data in the cycle and the safety clearance from the **SET_UP** column of the touch probe table.
2 Then the touch probe moves to the entered measuring height and runs the first probing process at the probing feed rate (column **F**).
3 Then the touch probe moves either paraxially at measuring height or at clearance height to the next starting point **2** and probes the second touch point.
4 Finally the TNC returns the touch probe to the clearance height and processes the determined datum depending on the cycle parameters Q303 and Q305 (See "") and saves the actual values in the Q parameters listed below.
5 If desired, the TNC subsequently measures the datum in the touch probe axis in a separate probing.

Parameter number	Meaning
Q166	Actual value of measured slot width
Q157	Actual value of the centerline

Please note while programming:

!

Danger of collision!

To prevent a collision between touch probe and workpiece, enter a **low** estimate for the slot width.

If the slot width and the safety clearance do not permit pre-positioning in the proximity of the touch points, the TNC always starts probing from the center of the slot. In this case the touch probe does not return to the clearance height between the two measuring points.

Before a cycle definition you must have programmed a tool call to define the touch probe axis.

If you set a datum (Q303 = 0) with the touch probe cycle and also use probe in TS axis (Q381 = 1), then no coordinate transformation must be active.

Cycle parameters

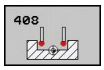

- **Center in 1st axis** Q321 (absolute): Center of the slot in the reference axis of the working plane. Input range -99999.9999 to 99999.9999
- **Center in 2nd axis** Q322 (absolute): Center of the slot in the minor axis of the working plane. Input range -99999.9999 to 99999.9999
- **Width of slot** Q311 (incremental): Width of the slot, regardless of its position in the working plane. Input range 0 to 99999.9999
- **Measuring axis** Q272: Axis in the working plane in which the measurement is to be made:
  1: Principal axis = measuring axis
  2: Secondary axis = measuring axis
- **Measuring height in the touch probe axis** Q261 (absolute): Coordinate of the ball tip center (= touch point) in the touch probe axis in which the measurement is to be made. Input range -99999.9999 to 99999.9999
- **Set-up clearance** Q320 (incremental): Additional distance between measuring point and ball tip. Q320 is added to **SET_UP** (touch probe table). Input range 0 to 99999.9999
- **Clearance height** Q260 (absolute): Coordinate in the touch probe axis at which no collision between touch probe and workpiece (fixtures) can occur. Input range -99999.9999 to 99999.9999
- **Traversing to clearance height** Q301: definition of how the touch probe is to move between the measuring points:
  0: Move at measuring height between measuring points
  1: Move at clearance height between measuring points
- **Number in table** Q305: Enter the number in the datum/preset table in which the TNC is to save the coordinates of the slot center. If you enter Q305=0, the TNC automatically sets the display so that the new datum is on the slot center. Input range 0 to 2999
- **New datum** Q405 (absolute): Coordinate in the measuring axis at which the TNC should set the calculated slot center. Default setting = 0. Input range -99999.9999 to 99999.9999

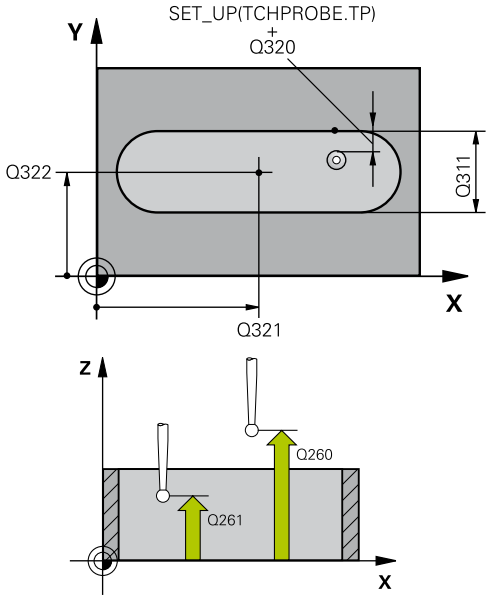

NC blocks

5 TCH PROBE 408 SLOT CENTER REF PT	
Q321=+50	;CENTER IN 1ST AXIS
Q322=+50	;CENTER IN 2ND AXIS
Q311=25	;SLOT WIDTH
Q272=1	;MEASURING AXIS
Q261=-5	;MEASURING HEIGHT
Q320=0	;SET-UP CLEARANCE
Q260=+20	;CLEARANCE HEIGHT
Q301=0	;MOVE TO CLEARANCE
Q305=10	;NO. IN TABLE
Q405=+0	;DATUM
Q303=+1	;MEAS. VALUE TRANSFER
Q381=1	;PROBE IN TS AXIS
Q382=+85	;1ST CO. FOR TS AXIS
Q383=+50	;2ND CO. FOR TS AXIS
Q384=+0	;3RD CO. FOR TS AXIS
Q333=+1	;DATUM

- **Measured value transfer (0, 1)** Q303: Specify if the determined basic rotation is to be saved in the datum table or in the preset table:
  0: Write the measured basic rotation as datum shift active datum table. The reference system is the active workpiece coordinate system
  1: Write the measured basic rotation into the preset table. The reference system is the machine coordinate system (REF system).
- **Probe in TS axis** Q381: Specify whether the TNC should also set the datum in the touch probe axis:
  0: Do not set the datum in the touch probe axis
  1: Set the datum in the touch probe axis
- **Probe TS axis: Coord. 1st axis** Q382 (absolute): Coordinate of the probe point in the reference axis of the working plane at which point the datum is to be set in the touch probe axis. Only effective if Q381 = 1st input range -99999.9999 to 99999.9999
- **Probe TS axis: Coord. 2nd axis** Q383 (absolute): Coordinate of the probe point in the minor axis of the working plane at which point the datum is to be set in the touch probe axis. Only effective if Q381 = 1. Input range -99999.9999 to 99999.9999
- **Probe TS axis: Coord. 3rd axis** Q384 (absolute): Coordinate of the probe point in the touch probe axis, at which point the datum is to be set in the touch probe axis. Only effective if Q381 = 1. Input range -99999.9999 to 99999.9999
- **New datum in TS axis** Q333 (absolute): Coordinate in the touch probe axis at which the TNC should set the datum. Default setting = 0. Input range -99999.9999 to 99999.9999

15.3 DATUM RIDGE CENTER (Cycle 409, DIN/ISO: G409)

Cycle run

Touch Probe Cycle 409 finds the center of a ridge and defines its center as datum. If desired, the TNC can also enter the coordinates into a datum table or the preset table.

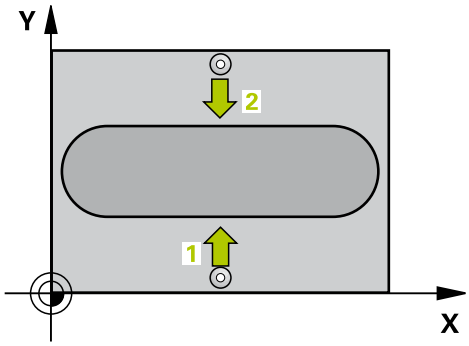

1 The TNC positions the touch probe at rapid traverse (value from **FMAX** column) following the positioning logic (See "Executing touch probe cycles", page 259) to the starting point **1**. The TNC calculates the touch points from the data in the cycle and the safety clearance from the **SET_UP** column of the touch probe table.
2 Then the touch probe moves to the entered measuring height and runs the first probing process at the probing feed rate (column **F**).
3 Then the touch probe moves at clearance height to the next touch point **2** and probes the second touch point.
4 Finally the TNC returns the touch probe to the clearance height and processes the determined datum depending on the cycle parameters Q303 and Q305 (See "Characteristics common to all touch probe cycles for datum setting", page 284) and saves the actual values in the Q parameters listed below.
5 If desired, the TNC subsequently measures the datum in the touch probe axis in a separate probing.

Parameter number	Meaning
Q166	Actual value of measured ridge width
Q157	Actual value of the centerline

Please note while programming:

!

Danger of collision!

To prevent a collision between touch probe and workpiece, enter a **high** estimate for the ridge width.

Before a cycle definition you must have programmed a tool call to define the touch probe axis.

If you set a datum (Q303 = 0) with the touch probe cycle and also use probe in TS axis (Q381 = 1), then no coordinate transformation must be active.

Cycle parameters

- **Center in 1st axis** Q321 (absolute): Center of the ridge in the reference axis of the working plane. Input range -99999.9999 to 99999.9999
- **Center in 2nd axis** Q322 (absolute): Center of the ridge in the minor axis of the working plane. Input range -99999.9999 to 99999.9999
- **Width of ridge** Q311 (incremental): Width of the ridge, regardless of its position in the working plane. Input range 0 to 99999.9999
- **Measuring axis** Q272: Axis in the working plane in which the measurement is to be made:
  1: Principal axis = measuring axis
  2: Secondary axis = measuring axis
- **Measuring height in the touch probe axis** Q261 (absolute): Coordinate of the ball tip center (= touch point) in the touch probe axis in which the measurement is to be made. Input range -99999.9999 to 99999.9999
- **Set-up clearance** Q320 (incremental): Additional distance between measuring point and ball tip. Q320 is added to **SET_UP** (touch probe table). Input range 0 to 99999.9999
- **Clearance height** Q260 (absolute): Coordinate in the touch probe axis at which no collision between touch probe and workpiece (fixtures) can occur. Input range -99999.9999 to 99999.9999
- **Number in table** Q305: Enter the number in the datum/preset table in which the TNC is to save the coordinates of the ridge center. If you enter Q305=0, the TNC automatically sets the display so that the new datum is on the slot center. Input range 0 to 2999
- **New datum** Q405 (absolute): Coordinate in the measuring axis at which the TNC should set the calculated ridge center. Default setting = 0 input range -99999.9999 to 99999.9999
- **Measured value transfer (0, 1)** Q303: Specify if the determined basic rotation is to be saved in the datum table or in the preset table:
  0: Write the measured basic rotation as datum shift active datum table. The reference system is the active workpiece coordinate system
  1: Write the measured basic rotation into the preset table. The reference system is the machine coordinate system (REF system).
- **Probe in TS axis** Q381: Specify whether the TNC should also set the datum in the touch probe axis:
  0: Do not set the datum in the touch probe axis
  1: Set the datum in the touch probe axis

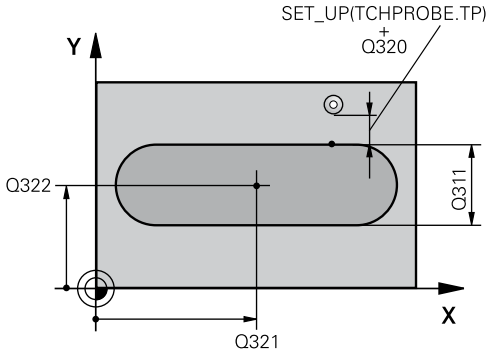

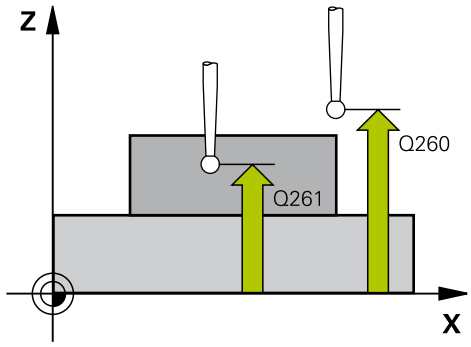

NC blocks

5 TCH PROBE 409 SLOT CENTER RIDGE	
Q321=+50	;CENTER IN 1ST AXIS
Q322=+50	;CENTER IN 2ND AXIS
Q311=25	;SLOT WIDTH
Q272=1	;MEASURING AXIS
Q261=-5	;MEASURING HEIGHT
Q320=0	;SET-UP CLEARANCE
Q260=+20	;CLEARANCE HEIGHT
Q305=10	;NO. IN TABLE
Q405=+0	;DATUM
Q303=+1	;MEAS. VALUE TRANSFER
Q381=1	;PROBE IN TS AXIS
Q382=+85	;1ST CO. FOR TS AXIS
Q383=+50	;2ND CO. FOR TS AXIS
Q384=+0	;3RD CO. FOR TS AXIS
Q333=+1	;DATUM

- **Probe TS axis: Coord. 1st axis** Q382 (absolute): Coordinate of the probe point in the reference axis of the working plane at which point the datum is to be set in the touch probe axis. Only effective if Q381 = 1st input range -99999.9999 to 99999.9999
- **Probe TS axis: Coord. 2nd axis** Q383 (absolute): Coordinate of the probe point in the minor axis of the working plane at which point the datum is to be set in the touch probe axis. Only effective if Q381 = 1. Input range -99999.9999 to 99999.9999
- **Probe TS axis: Coord. 3rd axis** Q384 (absolute): Coordinate of the probe point in the touch probe axis, at which point the datum is to be set in the touch probe axis. Only effective if Q381 = 1. Input range -99999.9999 to 99999.9999
- **New datum in TS axis** Q333 (absolute): Coordinate in the touch probe axis at which the TNC should set the datum. Default setting = 0. Input range -99999.9999 to 99999.9999

15.4 DATUM FROM INSIDE OF RECTANGLE (Cycle 410, DIN/ISO: G410)

Cycle run

Touch Probe Cycle 410 finds the center of a rectangular pocket and defines its center as datum. If desired, the TNC can also enter the coordinates into a datum table or the preset table.

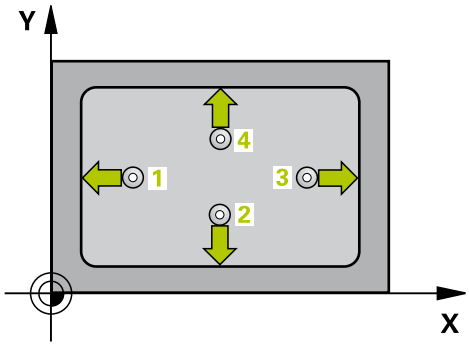

1 The TNC positions the touch probe at rapid traverse (value from **FMAX** column) following the positioning logic (See "Executing touch probe cycles", page 259) to the starting point **1**. The TNC calculates the touch points from the data in the cycle and the safety clearance from the **SET_UP** column of the touch probe table.
2 Then the touch probe moves to the entered measuring height and runs the first probing process at the probing feed rate (column **F**).
3 Then the touch probe moves either paraxially at measuring height or at clearance height to the next starting point **2** and probes the second touch point.
4 The TNC positions the probe to starting point **3** and then to starting point **4** to probe the third and fourth touch points.
5 Finally the TNC returns the touch probe to the clearance height and processes the determined datum depending on the cycle parameters Q303 and Q305. (See "")
6 If desired, the TNC subsequently measures the datum in the touch probe axis in a separate probing and saves the actual values in the following Q parameters.

Parameter number	Meaning
Q151	Actual value of center in reference axis
Q152	Actual value of center in minor axis
Q154	Actual value of length in the reference axis
Q155	Actual value of length in the minor axis

Please note while programming:

Danger of collision!

To prevent a collision between touch probe and workpiece, enter **low** estimates for the lengths of the first and second sides.

If the dimensions of the pocket and the safety clearance do not permit pre-positioning in the proximity of the touch points, the TNC always starts probing from the center of the pocket. In this case the touch probe does not return to the clearance height between the four measuring points.

Before a cycle definition you must have programmed a tool call to define the touch probe axis.

If you set a datum (Q303 = 0) with the touch probe cycle and also use probe in TS axis (Q381 = 1), then no coordinate transformation must be active.

Cycle parameters

- **Center in 1st axis** Q321 (absolute): Center of the pocket in the reference axis of the working plane. Input range -99999.9999 to 99999.9999
- **Center in 2nd axis** Q322 (absolute): Center of the pocket in the minor axis of the working plane. Input range -99999.9999 to 99999.9999
- **1st side length** Q323 (incremental): Pocket length, parallel to the reference axis of the working plane. Input range 0 to 99999.9999
- **2nd side length** Q324 (incremental): Pocket length, parallel to the minor axis of the working plane. Input range 0 to 99999.9999
- **Measuring height in the touch probe axis** Q261 (absolute): Coordinate of the ball tip center (= touch point) in the touch probe axis in which the measurement is to be made. Input range -99999.9999 to 99999.9999

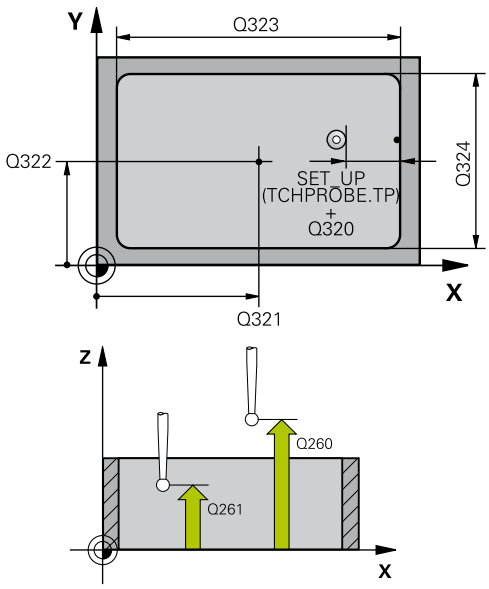

- **Set-up clearance** Q320 (incremental): Additional distance between measuring point and ball tip. Q320 is added to **SET_UP** (touch probe table). Input range 0 to 99999.9999
- **Clearance height** Q260 (absolute): Coordinate in the touch probe axis at which no collision between touch probe and workpiece (fixtures) can occur. Input range -99999.9999 to 99999.9999
- **Traversing to clearance height** Q301: definition of how the touch probe is to move between the measuring points:
  0: Move at measuring height between measuring points
  1: Move at clearance height between measuring points
- **Datum number in table** Q305: Enter the number in the datum/preset table in which the TNC is to save the coordinates of the pocket center. If you enter Q305=0, the TNC automatically sets the display so that the new datum is at the center of the pocket. Input range 0 to 2999
- **New datum for reference axis** Q331 (absolute): Coordinate in the reference axis at which the TNC should set the pocket center. Default setting = 0. Input range -99999.9999 to 99999.9999
- **New datum for minor axis** Q332 (absolute): Coordinate in the minor axis at which the TNC should set the pocket center. Default setting = 0 input range -99999.9999 to 99999.9999
- **Measured-value transfer (0, 1)** Q303: Specify whether the determined datum is to be saved in the datum table or in the preset table:
  -1: Do not use! Is entered by the TNC when old programs are read in (See "Characteristics common to all touch probe cycles for datum setting")
  0: Write determined datum in the active datum table. The reference system is the active workpiece coordinate system
  1: Write the measured datum into the preset table. The reference system is the machine coordinate system (REF system).
- **Probe in TS axis** Q381: Specify whether the TNC should also set the datum in the touch probe axis:
  0: Do not set the datum in the touch probe axis
  1: Set the datum in the touch probe axis
- **Probe TS axis: Coord. 1st axis** Q382 (absolute): Coordinate of the probe point in the reference axis of the working plane at which point the datum is to be set in the touch probe axis. Only effective if Q381 = 1st input range -99999.9999 to 99999.9999

NC blocks

```
5 TCH PROBE 410 DATUM INSIDE RECTAN.
    Q321=+50   ;CENTER IN 1ST AXIS
    Q322=+50   ;CENTER IN 2ND AXIS
    Q323=60    ;FIRST SIDE LENGTH
    Q324=20    ;2ND SIDE LENGTH
    Q261=-5    ;MEASURING HEIGHT
    Q320=0     ;SET-UP CLEARANCE
    Q260=+20   ;CLEARANCE HEIGHT
    Q301=0     ;MOVE TO CLEARANCE
    Q305=10    ;NO. IN TABLE
    Q331=+0    ;DATUM
    Q332=+0    ;DATUM
    Q303=+1    ;MEAS. VALUE
               TRANSFER
    Q381=1     ;PROBE IN TS AXIS
    Q382=+85   ;1ST CO. FOR TS AXIS
    Q383=+50   ;2ND CO. FOR TS AXIS
    Q384=+0    ;3RD CO. FOR TS AXIS
    Q333=+1    ;DATUM
```

- **Probe TS axis: Coord. 2nd axis** Q383 (absolute): Coordinate of the probe point in the minor axis of the working plane at which point the datum is to be set in the touch probe axis. Only effective if Q381 = 1. Input range -99999.9999 to 99999.9999
- **Probe TS axis: Coord. 3rd axis** Q384 (absolute): Coordinate of the probe point in the touch probe axis, at which point the datum is to be set in the touch probe axis. Only effective if Q381 = 1. Input range -99999.9999 to 99999.9999
- **New datum** Q333 (absolute): Coordinate at which the TNC should set the datum. Default setting = 0 input range -99999.9999 to 99999.9999

15.5 DATUM FROM OUTSIDE OF RECTANGLE (Cycle 411, DIN/ ISO: G411)

Cycle run

Touch Probe Cycle 411 finds the center of a rectangular stud and defines its center as datum. If desired, the TNC can also enter the coordinates into a datum table or the preset table.

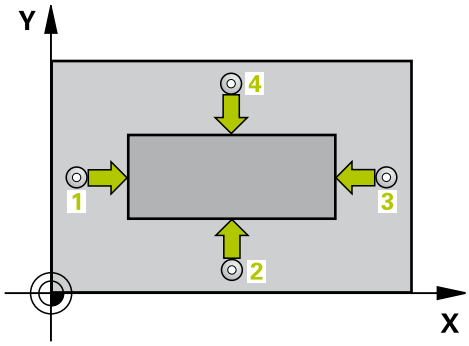

1 The TNC positions the touch probe at rapid traverse (value from **FMAX** column) following the positioning logic (See "Executing touch probe cycles", page 259) to the starting point **1**. The TNC calculates the touch points from the data in the cycle and the safety clearance from the **SET_UP** column of the touch probe table.
2 Then the touch probe moves to the entered measuring height and runs the first probing process at the probing feed rate (column **F**).
3 Then the touch probe moves either paraxially at measuring height or at clearance height to the next starting point **2** and probes the second touch point.
4 The TNC positions the probe to starting point **3** and then to starting point **4** to probe the third and fourth touch points.
5 Finally the TNC returns the touch probe to the clearance height and processes the determined datum depending on the cycle parameters Q303 and Q305. (See "Characteristics common to all touch probe cycles for datum setting", page 284)
6 If desired, the TNC subsequently measures the datum in the touch probe axis in a separate probing and saves the actual values in the following Q parameters.

Parameter number	Meaning
Q151	Actual value of center in reference axis
Q152	Actual value of center in minor axis
Q154	Actual value of length in the reference axis
Q155	Actual value of length in the minor axis

Please note while programming:

Danger of collision!

To prevent a collision between touch probe and workpiece, enter **high** estimates for the lengths of the 1st and 2nd sides.

Before a cycle definition you must have programmed a tool call to define the touch probe axis.

If you set a datum (Q303 = 0) with the touch probe cycle and also use probe in TS axis (Q381 = 1), then no coordinate transformation must be active.

Cycle parameters

- **Center in 1st axis** Q321 (absolute): Center of the stud in the reference axis of the working plane. Input range -99999.9999 to 99999.9999
- **Center in 2nd axis** Q322 (absolute): Center of the stud in the minor axis of the working plane. Input range -99999.9999 to 99999.9999
- **1st side length** Q323 (incremental): Stud length, parallel to the reference axis of the working plane Input range 0 to 99999.9999
- **2nd side length** Q324 (incremental): Stud length, parallel to the minor axis of the working plane. Input range 0 to 99999.9999
- **Measuring height in the touch probe axis** Q261 (absolute): Coordinate of the ball tip center (= touch point) in the touch probe axis in which the measurement is to be made. Input range -99999.9999 to 99999.9999
- **Set-up clearance** Q320 (incremental): Additional distance between measuring point and ball tip. Q320 is added to **SET_UP** (touch probe table). Input range 0 to 99999.9999

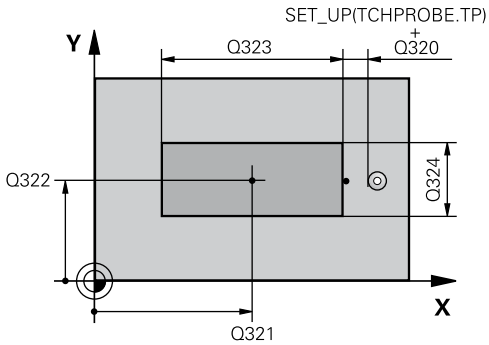

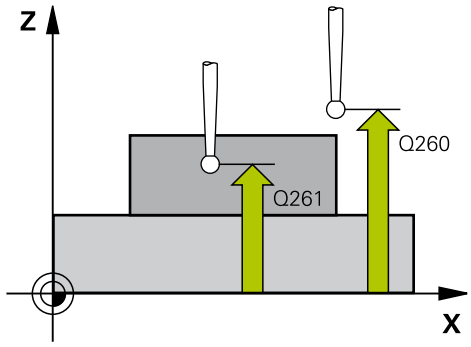

15.5 DATUM FROM OUTSIDE OF RECTANGLE (Cycle 411, DIN/ ISO: G411)

- **Clearance height** Q260 (absolute): Coordinate in the touch probe axis at which no collision between touch probe and workpiece (fixtures) can occur. Input range -99999.9999 to 99999.9999
- **Traversing to clearance height** Q301: definition of how the touch probe is to move between the measuring points:
  0: Move at measuring height between measuring points
  1: Move at clearance height between measuring points
- **Datum number in table** Q305: Enter the number in the datum/preset table in which the TNC is to save the coordinates of the stud center. If you enter Q305=0, the TNC automatically sets the display so that the new datum is on the stud center. Input range 0 to 2999
- **New datum for reference axis** Q331 (absolute): Coordinate in the reference axis at which the TNC should set the stud center. Default setting = 0 input range -99999.9999 to 99999.9999
- **New datum for minor axis** Q332 (absolute): Coordinate in the minor axis at which the TNC should set the stud center. Default setting = 0 input range -99999.9999 to 99999.9999
- **Measured-value transfer (0, 1)** Q303: Specify whether the determined datum is to be saved in the datum table or in the preset table:
  -1: Do not use! Is entered by the TNC when old programs are read in (See "Characteristics common to all touch probe cycles for datum setting")
  0: Write determined datum in the active datum table. The reference system is the active workpiece coordinate system
  1: Write the measured datum into the preset table. The reference system is the machine coordinate system (REF system).
- **Probe in TS axis** Q381: Specify whether the TNC should also set the datum in the touch probe axis:
  0: Do not set the datum in the touch probe axis
  1: Set the datum in the touch probe axis
- **Probe TS axis: Coord. 1st axis** Q382 (absolute): Coordinate of the probe point in the reference axis of the working plane at which point the datum is to be set in the touch probe axis. Only effective if Q381 = 1st input range -99999.9999 to 99999.9999

NC blocks

```
5 TCH PROBE 411 DATUM OUTS. RECTAN.
    Q321=+50   ;CENTER IN 1ST AXIS
    Q322=+50   ;CENTER IN 2ND AXIS
    Q323=60    ;FIRST SIDE LENGTH
    Q324=20    ;2ND SIDE LENGTH
    Q261=-5    ;MEASURING HEIGHT
    Q320=0     ;SET-UP CLEARANCE
    Q260=+20   ;CLEARANCE HEIGHT
    Q301=0     ;MOVE TO CLEARANCE
    Q305=0     ;NO. IN TABLE
    Q331=+0    ;DATUM
    Q332=+0    ;DATUM
    Q303=+1    ;MEAS. VALUE
               TRANSFER
    Q381=1     ;PROBE IN TS AXIS
    Q382=+85   ;1ST CO. FOR TS AXIS
    Q383=+50   ;2ND CO. FOR TS AXIS
    Q384=+0    ;3RD CO. FOR TS AXIS
    Q333=+1    ;DATUM
```

- **Probe TS axis: Coord. 2nd axis** Q383 (absolute): Coordinate of the probe point in the minor axis of the working plane at which point the datum is to be set in the touch probe axis. Only effective if Q381 = 1. Input range -99999.9999 to 99999.9999
- **Probe TS axis: Coord. 3rd axis** Q384 (absolute): Coordinate of the probe point in the touch probe axis, at which point the datum is to be set in the touch probe axis. Only effective if Q381 = 1. Input range -99999.9999 to 99999.9999
- **New datum in TS axis** Q333 (absolute): Coordinate in the touch probe axis at which the TNC should set the datum. Default setting = 0. Input range -99999.9999 to 99999.9999

15.6 DATUM FROM INSIDE OF CIRCLE (Cycle 412, DIN/ISO: G412)

Cycle run

Touch Probe Cycle 412 finds the center of a circular pocket (or of a hole) and defines its center as datum. If desired, the TNC can also enter the coordinates into a datum table or the preset table.

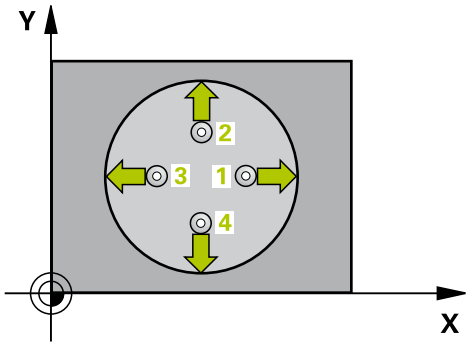

1 The TNC positions the touch probe at rapid traverse (value from **FMAX** column) following the positioning logic (See "Executing touch probe cycles", page 259) to the starting point **1**. The TNC calculates the touch points from the data in the cycle and the safety clearance from the **SET_UP** column of the touch probe table.
2 Then the touch probe moves to the entered measuring height and runs the first probing process at the probing feed rate (column **F**). The TNC derives the probing direction automatically from the programmed starting angle.
3 Then the touch probe moves in a circular arc either at measuring height or at clearance height to the next starting point **2** and probes the second touch point.
4 The TNC positions the probe to starting point **3** and then to starting point **4** to probe the third and fourth touch points.
5 Finally the TNC returns the touch probe to the clearance height and processes the determined datum depending on the cycle parameters Q303 and Q305 (See "Characteristics common to all touch probe cycles for datum setting", page 284) and saves the actual values in the Q parameters listed below.
6 If desired, the TNC subsequently measures the datum in the touch probe axis in a separate probing.

Parameter number	Meaning
Q151	Actual value of center in reference axis
Q152	Actual value of center in minor axis
Q153	Actual value of diameter

Please note while programming:

Danger of collision!

To prevent a collision between the touch probe and the workpiece, enter a **low** estimate for the nominal diameter of the pocket (or hole).

If the dimensions of the pocket and the safety clearance do not permit pre-positioning in the proximity of the touch points, the TNC always starts probing from the center of the pocket. In this case the touch probe does not return to the clearance height between the four measuring points.

The smaller the angle increment Q247, the less accurately the TNC can calculate the datum. Minimum input value: 5°.

Before a cycle definition you must have programmed a tool call to define the touch probe axis.

If you set a datum (Q303 = 0) with the touch probe cycle and also use probe in TS axis (Q381 = 1), then no coordinate transformation must be active.

Cycle parameters

- **Center in 1st axis** Q321 (absolute): Center of the pocket in the reference axis of the working plane. Input range -99999.9999 to 99999.9999
- **Center in 2nd axis** Q322 (absolute): Center of the pocket in the minor axis of the working plane. If you program Q322 = 0, the TNC aligns the hole center to the positive Y axis. If you program Q322 not equal to 0, then the TNC aligns the hole center to the nominal position. Input range -99999.9999 to 99999.9999
- **Nominal diameter** Q262: Approximate diameter of the circular pocket (or hole). Enter a value that is more likely to be too small than too large. Input range 0 to 99999.9999
- **Starting angle** Q325 (absolute): Angle between the reference axis of the working plane and the first touch point. Input range -360.000 to 360.000

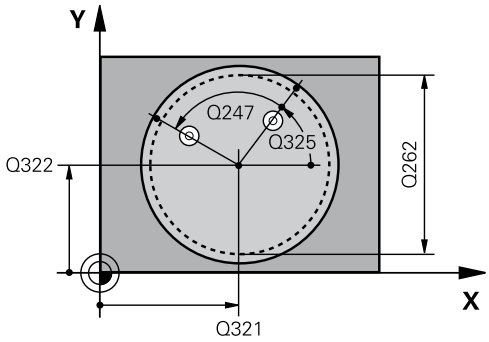

- **Stepping angle** Q247 (incremental): Angle between two measuring points. The algebraic sign of the stepping angle determines the direction of rotation (negative = clockwise) in which the touch probe moves to the next measuring point. If you wish to probe a circular arc instead of a complete circle, then program the stepping angle to be less than 90°. Input range -120.000 to 120.000
- **Measuring height in the touch probe axis** Q261 (absolute): Coordinate of the ball tip center (= touch point) in the touch probe axis in which the measurement is to be made. Input range -99999.9999 to 99999.9999
- **Set-up clearance** Q320 (incremental): Additional distance between measuring point and ball tip. Q320 is added to **SET_UP** (touch probe table). Input range 0 to 99999.9999
- **Clearance height** Q260 (absolute): Coordinate in the touch probe axis at which no collision between touch probe and workpiece (fixtures) can occur. Input range -99999.9999 to 99999.9999
- **Traversing to clearance height** Q301: definition of how the touch probe is to move between the measuring points:
  0: Move at measuring height between measuring points
  1: Move at clearance height between measuring points
- **Datum number in table** Q305: Enter the number in the datum/preset table in which the TNC is to save the coordinates of the pocket center. If you enter Q305=0, the TNC automatically sets the display so that the new datum is at the center of the pocket. Input range 0 to 2999
- **New datum for reference axis** Q331 (absolute): Coordinate in the reference axis at which the TNC should set the pocket center. Default setting = 0. Input range -99999.9999 to 99999.9999
- **New datum for minor axis** Q332 (absolute): Coordinate in the minor axis at which the TNC should set the pocket center. Default setting = 0 input range -99999.9999 to 99999.9999

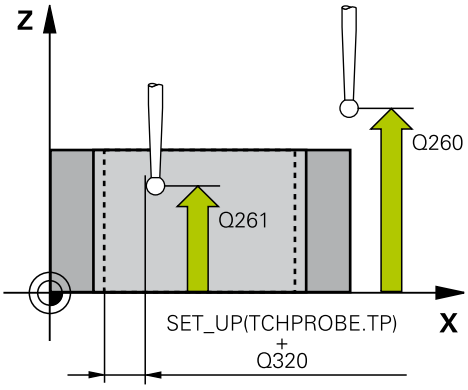

NC blocks

5 TCH PROBE 412 DATUM INSIDE CIRCLE	
Q321=+50	;CENTER IN 1ST AXIS
Q322=+50	;CENTER IN 2ND AXIS
Q262=75	;NOMINAL DIAMETER
Q325=+0	;STARTING ANGLE
Q247=+60	;STEPPING ANGLE
Q261=-5	;MEASURING HEIGHT
Q320=0	;SET-UP CLEARANCE
Q260=+20	;CLEARANCE HEIGHT
Q301=0	;MOVE TO CLEARANCE
Q305=12	;NO. IN TABLE
Q331=+0	;DATUM
Q332=+0	;DATUM
Q303=+1	;MEAS. VALUE TRANSFER
Q381=1	;PROBE IN TS AXIS
Q382=+85	;1ST CO. FOR TS AXIS
Q383=+50	;2ND CO. FOR TS AXIS
Q384=+0	;3RD CO. FOR TS AXIS
Q333=+1	;DATUM
Q423=4	;NO. OF PROBE POINTS
Q365=1	;TYPE OF TRAVERSE

- **Measured-value transfer (0, 1)** Q303: Specify whether the determined datum is to be saved in the datum table or in the preset table:
  -1: Do not use! Is entered by the TNC when old programs are read in (See "Characteristics common to all touch probe cycles for datum setting")
  0: Write determined datum in the active datum table. The reference system is the active workpiece coordinate system
  1: Write the measured datum into the preset table. The reference system is the machine coordinate system (REF system).
- **Probe in TS axis** Q381: Specify whether the TNC should also set the datum in the touch probe axis:
  0: Do not set the datum in the touch probe axis
  1: Set the datum in the touch probe axis
- **Probe TS axis: Coord. 1st axis** Q382 (absolute): Coordinate of the probe point in the reference axis of the working plane at which point the datum is to be set in the touch probe axis. Only effective if Q381 = 1st input range -99999.9999 to 99999.9999
- **Probe TS axis: Coord. 2nd axis** Q383 (absolute): Coordinate of the probe point in the minor axis of the working plane at which point the datum is to be set in the touch probe axis. Only effective if Q381 = 1. Input range -99999.9999 to 99999.9999
- **Probe TS axis: Coord. 3rd axis** Q384 (absolute): Coordinate of the probe point in the touch probe axis, at which point the datum is to be set in the touch probe axis. Only effective if Q381 = 1. Input range -99999.9999 to 99999.9999
- **New datum in TS axis** Q333 (absolute): Coordinate in the touch probe axis at which the TNC should set the datum. Default setting = 0. Input range -99999.9999 to 99999.9999
- **No. of measuring points (4/3)** Q423: Specify whether the TNC should measure the stud with 4 or 3 probing points:
  4: Use 4 measuring points (default setting)
  3: Use 3 measuring points
- **Type of traverse? Line=0/Arc=1** Q365: Definition of the path function with which the tool is to move between the measuring points if "traverse to clearance height" (Q301=1) is active:
  0: Move in a straight line between machining operations
  1: Move in a circular arc on the pitch circle diameter between machining operations

15.7 DATUM FROM OUTSIDE OF CIRCLE (Cycle 413, DIN/ISO: G413)

Cycle run

Touch Probe Cycle 413 finds the center of a circular stud and defines it as datum. If desired, the TNC can also enter the coordinates into a datum table or the preset table.

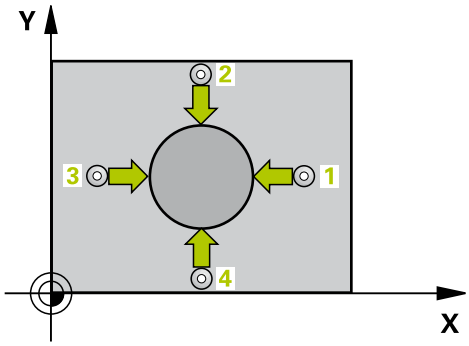

1 The TNC positions the touch probe at rapid traverse (value from **FMAX** column) following the positioning logic (See "Executing touch probe cycles", page 259) to the starting point **1**. The TNC calculates the touch points from the data in the cycle and the safety clearance from the **SET_UP** column of the touch probe table.
2 Then the touch probe moves to the entered measuring height and runs the first probing process at the probing feed rate (column **F**). The TNC derives the probing direction automatically from the programmed starting angle.
3 Then the touch probe moves in a circular arc either at measuring height or at clearance height to the next starting point **2** and probes the second touch point.
4 The TNC positions the probe to starting point **3** and then to starting point **4** to probe the third and fourth touch points.
5 Finally the TNC returns the touch probe to the clearance height and processes the determined datum depending on the cycle parameters Q303 and Q305 (See "Characteristics common to all touch probe cycles for datum setting", page 284) and saves the actual values in the Q parameters listed below.
6 If desired, the TNC subsequently measures the datum in the touch probe axis in a separate probing.

Parameter number	Meaning
Q151	Actual value of center in reference axis
Q152	Actual value of center in minor axis
Q153	Actual value of diameter

Please note while programming:

!

Danger of collision!

To prevent a collision between touch probe and workpiece, enter a **high** estimate for the nominal diameter of the stud.

Before a cycle definition you must have programmed a tool call to define the touch probe axis.

The smaller the angle increment Q247, the less accurately the TNC can calculate the datum. Minimum input value: 5°.

If you set a datum (Q303 = 0) with the touch probe cycle and also use probe in TS axis (Q381 = 1), then no coordinate transformation must be active.

Cycle parameters

- **Center in 1st axis** Q321 (absolute): Center of the stud in the reference axis of the working plane. Input range -99999.9999 to 99999.9999
- **Center in 2nd axis** Q322 (absolute): Center of the stud in the minor axis of the working plane. If you program Q322 = 0, the TNC aligns the hole center to the positive Y axis. If you program Q322 not equal to 0, then the TNC aligns the hole center to the nominal position. Input range -99999.9999 to 99999.9999
- **Nominal diameter** Q262: Approximate diameter of the stud. Enter a value that is more likely to be too large than too small. Input range 0 to 99999.9999
- **Starting angle** Q325 (absolute): Angle between the reference axis of the working plane and the first touch point. Input range -360.000 to 360.000
- **Stepping angle** Q247 (incremental): Angle between two measuring points. The algebraic sign of the stepping angle determines the direction of rotation (negative = clockwise) in which the touch probe moves to the next measuring point. If you wish to probe a circular arc instead of a complete circle, then program the stepping angle to be less than 90°. Input range -120.000 to 120.000
- **Measuring height in the touch probe axis** Q261 (absolute): Coordinate of the ball tip center (= touch point) in the touch probe axis in which the measurement is to be made. Input range -99999.9999 to 99999.9999
- **Set-up clearance** Q320 (incremental): Additional distance between measuring point and ball tip. Q320 is added to **SET_UP** (touch probe table). Input range 0 to 99999.9999
- **Clearance height** Q260 (absolute): Coordinate in the touch probe axis at which no collision between touch probe and workpiece (fixtures) can occur. Input range -99999.9999 to 99999.9999
- **Traversing to clearance height** Q301: definition of how the touch probe is to move between the measuring points:
  0: Move at measuring height between measuring points
  1: Move at clearance height between measuring points
- **Datum number in table** Q305: Enter the number in the datum/preset table in which the TNC is to save the coordinates of the stud center. If you enter Q305=0, the TNC automatically sets the display so that the new datum is on the stud center. Input range 0 to 2999

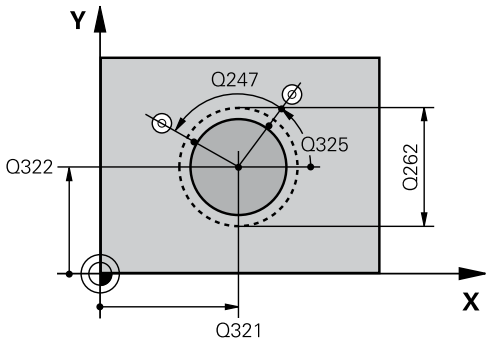

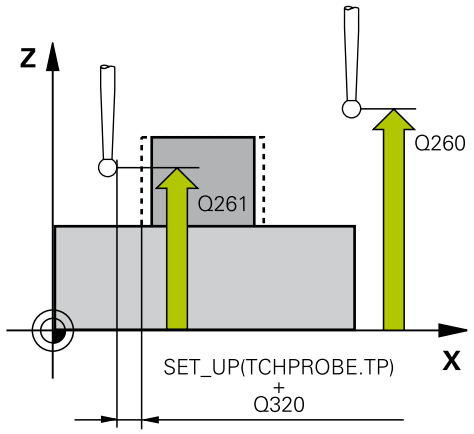

NC blocks

5 TCH PROBE 413 DATUM OUTSIDE CIRCLE	
Q321=+50	;CENTER IN 1ST AXIS
Q322=+50	;CENTER IN 2ND AXIS
Q262=75	;NOMINAL DIAMETER
Q325=+0	;STARTING ANGLE
Q247=+60	;STEPPING ANGLE
Q261=-5	;MEASURING HEIGHT
Q320=0	;SET-UP CLEARANCE
Q260=+20	;CLEARANCE HEIGHT
Q301=0	;MOVE TO CLEARANCE
Q305=15	;NO. IN TABLE
Q331=+0	;DATUM
Q332=+0	;DATUM
Q303=+1	;MEAS. VALUE TRANSFER
Q381=1	;PROBE IN TS AXIS
Q382=+85	;1ST CO. FOR TS AXIS
Q383=+50	;2ND CO. FOR TS AXIS
Q384=+0	;3RD CO. FOR TS AXIS
Q333=+1	;DATUM
Q423=4	;NO. OF PROBE POINTS
Q365=1	;TYPE OF TRAVERSE

- **New datum for reference axis** Q331 (absolute): Coordinate in the reference axis at which the TNC should set the stud center. Default setting = 0 input range -99999.9999 to 99999.9999
- **New datum for minor axis** Q332 (absolute): Coordinate in the minor axis at which the TNC should set the stud center. Default setting = 0 input range -99999.9999 to 99999.9999
- **Measured-value transfer (0, 1)** Q303: Specify whether the determined datum is to be saved in the datum table or in the preset table:
  -1: Do not use! Is entered by the TNC when old programs are read in (See "Characteristics common to all touch probe cycles for datum setting")
  0: Write determined datum in the active datum table. The reference system is the active workpiece coordinate system
  1: Write the measured datum into the preset table. The reference system is the machine coordinate system (REF system).
- **Probe in TS axis** Q381: Specify whether the TNC should also set the datum in the touch probe axis:
  0: Do not set the datum in the touch probe axis
  1: Set the datum in the touch probe axis
- **Probe TS axis: Coord. 1st axis** Q382 (absolute): Coordinate of the probe point in the reference axis of the working plane at which point the datum is to be set in the touch probe axis. Only effective if Q381 = 1st input range -99999.9999 to 99999.9999
- **Probe TS axis: Coord. 2nd axis** Q383 (absolute): Coordinate of the probe point in the minor axis of the working plane at which point the datum is to be set in the touch probe axis. Only effective if Q381 = 1. Input range -99999.9999 to 99999.9999
- **Probe TS axis: Coord. 3rd axis** Q384 (absolute): Coordinate of the probe point in the touch probe axis, at which point the datum is to be set in the touch probe axis. Only effective if Q381 = 1. Input range -99999.9999 to 99999.9999

- **New datum in TS axis** Q333 (absolute): Coordinate in the touch probe axis at which the TNC should set the datum. Default setting = 0. Input range -99999.9999 to 99999.9999
- **No. of measuring points (4/3)** Q423: Specify whether the TNC should measure the stud with 4 or 3 probing points:
  4: Use 4 measuring points (default setting)
  3: Use 3 measuring points
- **Type of traverse? Line=0/Arc=1** Q365: Definition of the path function with which the tool is to move between the measuring points if "traverse to clearance height" (Q301=1) is active:
  0: Move in a straight line between machining operations
  1: Move in a circular arc on the pitch circle diameter between machining operations

15.8 DATUM FROM OUTSIDE OF CORNER (Cycle 414, DIN/ISO: G414)

Cycle run

Touch Probe Cycle 414 finds the intersection of two lines and defines it as the datum. If desired, the TNC can also enter the intersection into a datum table or preset table.

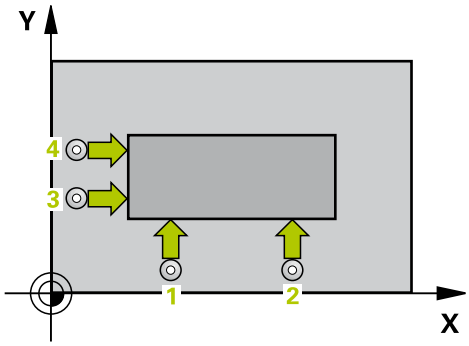

1 Following the positioning logic (See "Executing touch probe cycles", page 259), the TNC positions the touch probe at rapid traverse (value from **FMAX** column) to the first touch point **1** (see figure at upper right). The TNC offsets the touch probe by the safety clearance in the direction opposite to the respective traverse direction.
2 Then the touch probe moves to the entered measuring height and runs the first probing process at the probing feed rate (column **F**). The TNC derives the probing direction automatically from the programmed 3rd measuring point.

1 Then the touch probe moves to the next starting position **2** and from there probes the second position.
2 The TNC positions the probe to starting point **3** and then to starting point **4** to probe the third and fourth touch points.
3 Finally the TNC returns the touch probe to the clearance height and processes the determined datum depending on the cycle parameters Q303 and Q305 (See "Characteristics common to all touch probe cycles for datum setting", page 284) and saves the coordinates of the determined corner in the Q parameters listed below.
4 If desired, the TNC subsequently measures the datum in the touch probe axis in a separate probing.

Parameter number	Meaning
Q151	Actual value of corner in reference axis
Q152	Actual value of corner in minor axis

Please note while programming:

Danger of collision!
If you set a datum (Q303 = 0) with the touch probe cycle and also use probe in TS axis (Q381 = 1), then no coordinate transformation must be active.

Before a cycle definition you must have programmed a tool call to define the touch probe axis.

The TNC always measures the first line in the direction of the minor axis of the working plane.

By defining the positions of the measuring points 1 and 3 you also determine the corner at which the TNC sets the datum (see figure at right and table below).

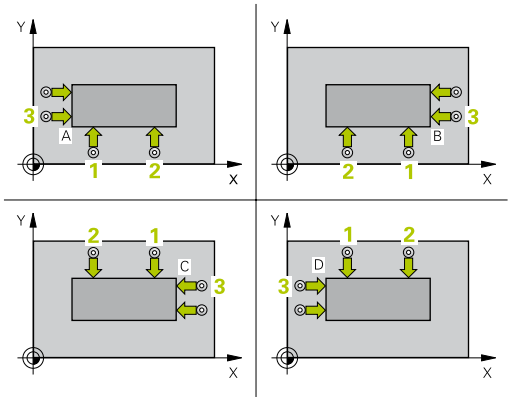

Corner	X coordinate	Y coordinate
A	Point 1 greater than point 3	Point 1 less than point 3
B	Point 1 less than point 3	Point 1 less than point 3
C	Point 1 less than point 3	Point 1 greater than point 3
D	Point 1 greater than point 3	Point 1 greater than point 3

Cycle parameters

- **1st meas. point 1st axis** Q263 (absolute): Coordinate of the first touch point in the reference axis of the working plane. Input range -99999.9999 to 99999.9999
- **1st meas. point 2nd axis** Q264 (absolute): Coordinate of the first touch point in the minor axis of the working plane. Input range -99999.9999 to 99999.9999
- **Spacing in 1st axis** Q326 (incremental): Distance between the first and second measuring points in the reference axis of the working plane. Input range 0 to 99999.9999

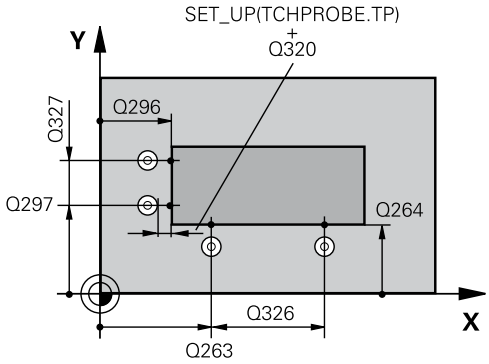

- **3rd meas. point 1st axis** Q296 (absolute): Coordinate of the third touch point in the reference axis of the working plane. Input range -99999.9999 to 99999.9999
- **3rd meas. point 2nd axis** Q297 (absolute): Coordinate of the third touch point in the minor axis of the working plane. Input range -99999.9999 to 99999.9999
- **Spacing in 2nd axis** Q327 (incremental): Distance between third and fourth measuring points in the minor axis of the working plane. Input range 0 to 99999.9999
- **Measuring height in the touch probe axis** Q261 (absolute): Coordinate of the ball tip center (= touch point) in the touch probe axis in which the measurement is to be made. Input range -99999.9999 to 99999.9999
- **Set-up clearance** Q320 (incremental): Additional distance between measuring point and ball tip. Q320 is added to **SET_UP** (touch probe table). Input range 0 to 99999.9999
- **Clearance height** Q260 (absolute): Coordinate in the touch probe axis at which no collision between touch probe and workpiece (fixtures) can occur. Input range -99999.9999 to 99999.9999
- **Traversing to clearance height** Q301: definition of how the touch probe is to move between the measuring points:
  0: Move at measuring height between measuring points
  1: Move at clearance height between measuring points
- **Execute basic rotation** Q304: Definition of whether the TNC should compensate workpiece misalignment with a basic rotation:
  0: Do not execute basic rotation
  1: Execute basic rotation
- **Datum number in table** Q305: Enter the datum number in the datum or preset table in which the TNC is to save the coordinates of the corner. If you enter Q305=0, the TNC automatically sets the display so that the new datum is on the corner. Input range 0 to 2999
- **New datum for reference axis** Q331 (absolute): Coordinate in the reference axis at which the TNC should set the corner. Default setting = 0 input range -99999.9999 to 99999.9999
- **New datum for minor axis** Q332 (absolute): Coordinate in the minor axis at which the TNC should set the calculated corner. Default setting = 0 input range -99999.9999 to 99999.9999

NC blocks

```
5 TCH PROBE 414 DATUM INSIDE CORNER
    Q263=+37   ;1ST POINT 1ST AXIS
    Q264=+7    ;1ST POINT 2ND AXIS
    Q326=50    ;SPACING IN 1ST AXIS
    Q296=+95   ;3RD POINT 1ST AXIS
    Q297=+25   ;3RD POINT 2ND AXIS
    Q327=45    ;SPACING IN 2ND AXIS
    Q261=-5    ;MEASURING HEIGHT
    Q320=0     ;SET-UP CLEARANCE
    Q260=+20   ;CLEARANCE HEIGHT
    Q301=0     ;MOVE TO CLEARANCE
    Q304=0     ;BASIC ROTATION
    Q305=7     ;NO. IN TABLE
    Q331=+0    ;DATUM
    Q332=+0    ;DATUM
    Q303=+1    ;MEAS. VALUE
               TRANSFER
    Q381=1     ;PROBE IN TS AXIS
    Q382=+85   ;1ST CO. FOR TS AXIS
    Q383=+50   ;2ND CO. FOR TS AXIS
    Q384=+0    ;3RD CO. FOR TS AXIS
    Q333=+1    ;DATUM
```

- **Measured-value transfer (0, 1)** Q303: Specify whether the determined datum is to be saved in the datum table or in the preset table:
  -1: Do not use! Is entered by the TNC when old programs are read in (See "Characteristics common to all touch probe cycles for datum setting")
  0: Write determined datum in the active datum table. The reference system is the active workpiece coordinate system
  1: Write the measured datum into the preset table. The reference system is the machine coordinate system (REF system).
- **Probe in TS axis** Q381: Specify whether the TNC should also set the datum in the touch probe axis:
  0: Do not set the datum in the touch probe axis
  1: Set the datum in the touch probe axis
- **Probe TS axis: Coord. 1st axis** Q382 (absolute): Coordinate of the probe point in the reference axis of the working plane at which point the datum is to be set in the touch probe axis. Only effective if Q381 = 1st input range -99999.9999 to 99999.9999
- **Probe TS axis: Coord. 2nd axis** Q383 (absolute): Coordinate of the probe point in the minor axis of the working plane at which point the datum is to be set in the touch probe axis. Only effective if Q381 = 1. Input range -99999.9999 to 99999.9999
- **Probe TS axis: Coord. 3rd axis** Q384 (absolute): Coordinate of the probe point in the touch probe axis, at which point the datum is to be set in the touch probe axis. Only effective if Q381 = 1. Input range -99999.9999 to 99999.9999
- **New datum in TS axis** Q333 (absolute): Coordinate in the touch probe axis at which the TNC should set the datum. Default setting = 0. Input range -99999.9999 to 99999.9999

15.9 DATUM FROM INSIDE OF CORNER (Cycle 415, DIN/ISO: G415)

Cycle run

Touch Probe Cycle 415 finds the intersection of two lines and defines it as the datum. If desired, the TNC can also enter the intersection into a datum table or preset table.

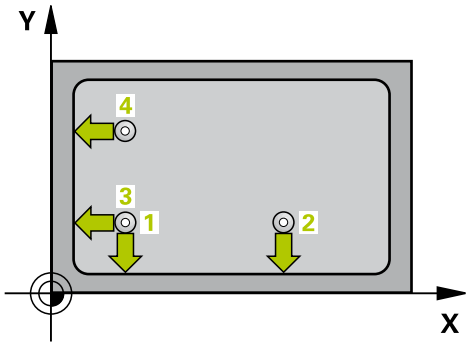

1 Following the positioning logic (See "Executing touch probe cycles", page 259), the TNC positions the touch probe at rapid traverse (value from **FMAX** column) to the first touch point **1** (see figure at upper right) that you have defined in the cycle. The TNC offsets the touch probe by the safety clearance in the direction opposite to the respective traverse direction.
2 Then the touch probe moves to the entered measuring height and runs the first probing process at the probing feed rate (column **F**). The probing direction is derived from the number by which you identify the corner.

1 Then the touch probe moves to the next starting position **2** and from there probes the second position.
2 The TNC positions the probe to starting point **3** and then to starting point **4** to probe the third and fourth touch points.
3 Finally the TNC returns the touch probe to the clearance height and processes the determined datum depending on the cycle parameters Q303 and Q305 (See "Characteristics common to all touch probe cycles for datum setting", page 284) and saves the coordinates of the determined corner in the Q parameters listed below.
4 If desired, the TNC subsequently measures the datum in the touch probe axis in a separate probing.

Parameter number	Meaning
Q151	Actual value of corner in reference axis
Q152	Actual value of corner in minor axis

Please note while programming:

Danger of collision!
If you set a datum (Q303 = 0) with the touch probe cycle and also use probe in TS axis (Q381 = 1), then no coordinate transformation must be active.

Before a cycle definition you must have programmed a tool call to define the touch probe axis.
The TNC always measures the first line in the direction of the minor axis of the working plane.

Cycle parameters

- **1st meas. point 1st axis** Q263 (absolute): Coordinate of the first touch point in the reference axis of the working plane. Input range -99999.9999 to 99999.9999
- **1st meas. point 2nd axis** Q264 (absolute): Coordinate of the first touch point in the minor axis of the working plane. Input range -99999.9999 to 99999.9999
- **Spacing in 1st axis** Q326 (incremental): Distance between the first and second measuring points in the reference axis of the working plane. Input range 0 to 99999.9999
- **Spacing in 2nd axis** Q327 (incremental): Distance between third and fourth measuring points in the minor axis of the working plane. Input range 0 to 99999.9999
- **Corner** Q308: Number identifying the corner which the TNC is to set as datum. Input range 1 to 4
- **Measuring height in the touch probe axis** Q261 (absolute): Coordinate of the ball tip center (= touch point) in the touch probe axis in which the measurement is to be made. Input range -99999.9999 to 99999.9999
- **Set-up clearance** Q320 (incremental): Additional distance between measuring point and ball tip. Q320 is added to **SET_UP** (touch probe table). Input range 0 to 99999.9999
- **Clearance height** Q260 (absolute): Coordinate in the touch probe axis at which no collision between touch probe and workpiece (fixtures) can occur. Input range -99999.9999 to 99999.9999
- **Traversing to clearance height** Q301: definition of how the touch probe is to move between the measuring points:
  0: Move at measuring height between measuring points
  1: Move at clearance height between measuring points
- **Execute basic rotation** Q304: Definition of whether the TNC should compensate workpiece misalignment with a basic rotation:
  0: Do not execute basic rotation
  1: Execute basic rotation
- **Datum number in table** Q305: Enter the datum number in the datum or preset table in which the TNC is to save the coordinates of the corner. If you enter Q305=0, the TNC automatically sets the display so that the new datum is on the corner. Input range 0 to 2999

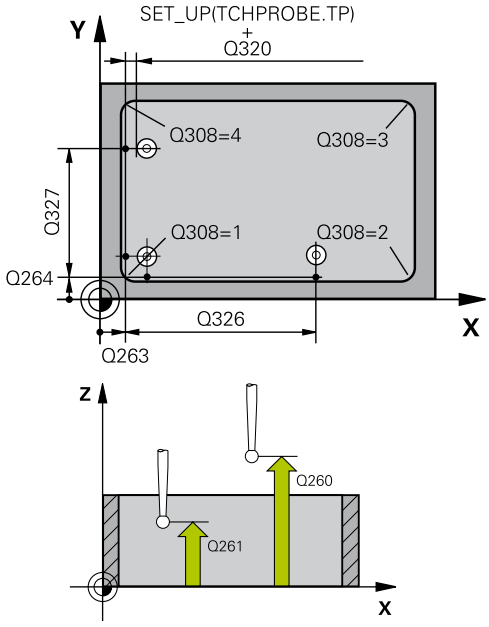

NC blocks

5 TCH PROBE 415 DATUM OUTSIDE CORNER	
Q263=+37	;1ST POINT 1ST AXIS
Q264=+7	;1ST POINT 2ND AXIS
Q326=50	;SPACING IN 1ST AXIS
Q296=+95	;3RD POINT 1ST AXIS
Q297=+25	;3RD POINT 2ND AXIS
Q327=45	;SPACING IN 2ND AXIS
Q261=-5	;MEASURING HEIGHT
Q320=0	;SET-UP CLEARANCE
Q260=+20	;CLEARANCE HEIGHT
Q301=0	;MOVE TO CLEARANCE
Q304=0	;BASIC ROTATION
Q305=7	;NO. IN TABLE
Q331=+0	;DATUM
Q332=+0	;DATUM
Q303=+1	;MEAS. VALUE TRANSFER
Q381=1	;PROBE IN TS AXIS
Q382=+85	;1ST CO. FOR TS AXIS
Q383=+50	;2ND CO. FOR TS AXIS
Q384=+0	;3RD CO. FOR TS AXIS
Q333=+1	;DATUM

- **New datum for reference axis** Q331 (absolute): Coordinate in the reference axis at which the TNC should set the corner. Default setting = 0 input range -99999.9999 to 99999.9999
- **New datum for minor axis** Q332 (absolute): Coordinate in the minor axis at which the TNC should set the calculated corner. Default setting = 0 input range -99999.9999 to 99999.9999
- **Measured-value transfer (0, 1)** Q303: Specify whether the determined datum is to be saved in the datum table or in the preset table:
  -1: Do not use! Is entered by the TNC when old programs are read in (See "Characteristics common to all touch probe cycles for datum setting")
  0: Write determined datum in the active datum table. The reference system is the active workpiece coordinate system
  1: Write the measured datum into the preset table. The reference system is the machine coordinate system (REF system).
- **Probe in TS axis** Q381: Specify whether the TNC should also set the datum in the touch probe axis:
  0: Do not set the datum in the touch probe axis
  1: Set the datum in the touch probe axis
- **Probe TS axis: Coord. 1st axis** Q382 (absolute): Coordinate of the probe point in the reference axis of the working plane at which point the datum is to be set in the touch probe axis. Only effective if Q381 = 1st input range -99999.9999 to 99999.9999
- **Probe TS axis: Coord. 2nd axis** Q383 (absolute): Coordinate of the probe point in the minor axis of the working plane at which point the datum is to be set in the touch probe axis. Only effective if Q381 = 1. Input range -99999.9999 to 99999.9999
- **Probe TS axis: Coord. 3rd axis** Q384 (absolute): Coordinate of the probe point in the touch probe axis, at which point the datum is to be set in the touch probe axis. Only effective if Q381 = 1. Input range -99999.9999 to 99999.9999
- **New datum in TS axis** Q333 (absolute): Coordinate in the touch probe axis at which the TNC should set the datum. Default setting = 0. Input range -99999.9999 to 99999.9999

15.10 DATUM CIRCLE CENTER (Cycle 416, DIN/ISO: G416)

Cycle run

Touch Probe Cycle 416 finds the center of a bolt hole circle and defines its center as datum. If desired, the TNC can also enter the coordinates into a datum table or the preset table.

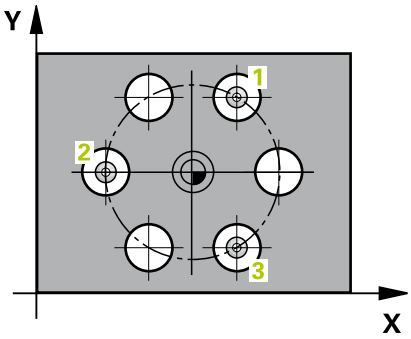

1 Following the positioning logic (See "Executing touch probe cycles", page 259), the control positions the touch probe at rapid traverse (value from column **FMAX**) to the center of the first hole **1**.
2 Then the probe moves to the entered measuring height and probes four points to find the first hole center.
3 The touch probe returns to the clearance height and then to the position entered as center of the second hole **2**.
4 The TNC moves the touch probe to the entered measuring height and probes four points to find the second hole center.
5 The touch probe returns to the clearance height and then to the position entered as center of the third hole **3**.
6 The TNC moves the touch probe to the entered measuring height and probes four points to find the third hole center.
7 Finally the TNC returns the touch probe to the clearance height and processes the determined datum depending on the cycle parameters Q303 and Q305 (See "Characteristics common to all touch probe cycles for datum setting", page 284) and saves the actual values in the Q parameters listed below.
8 If desired, the TNC subsequently measures the datum in the touch probe axis in a separate probing.

Parameter number	Meaning
Q151	Actual value of center in reference axis
Q152	Actual value of center in minor axis
Q153	Actual value of bolt hole circle diameter

Please note while programming:

Danger of collision!
If you set a datum (Q303 = 0) with the touch probe cycle and also use probe in TS axis (Q381 = 1), then no coordinate transformation must be active.

Before a cycle definition you must have programmed a tool call to define the touch probe axis.

Cycle parameters

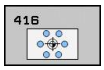

- **Center in 1st axis** Q273 (absolute): Bolt hole circle center (nominal value) in the reference axis of the working plane. Input range -99999.9999 to 99999.9999
- **Center in 2nd axis** Q274 (absolute): Bolt hole circle center (nominal value) in the minor axis of the working plane. Input range -99999.9999 to 99999.9999
- **Nominal diameter** Q262: Enter the approximate bolt hole circle diameter. The smaller the hole diameter, the more exact the nominal diameter must be. Input range 0 to 99999.9999
- **Angle of 1st hole** Q291 (absolute): Polar coordinate angle of the first hole center in the working plane. Input range -360.0000 to 360.0000
- **Angle of 2nd hole** Q292 (absolute): Polar coordinate angle of the second hole center in the working plane. Input range -360.0000 to 360.0000
- **Angle of 3rd hole** Q293 (absolute): Polar coordinate angle of the third hole center in the working plane. Input range -360.0000 to 360.0000
- **Measuring height in the touch probe axis** Q261 (absolute): Coordinate of the ball tip center (= touch point) in the touch probe axis in which the measurement is to be made. Input range -99999.9999 to 99999.9999
- **Clearance height** Q260 (absolute): Coordinate in the touch probe axis at which no collision between touch probe and workpiece (fixtures) can occur. Input range -99999.9999 to 99999.9999
- **Datum number in table** Q305: Enter the number in the datum or preset table in which the TNC is to save the coordinates of the bolt-hole circle center. If you enter Q305=0, the TNC automatically sets the display so that the new datum is on the bolt hole center. Input range 0 to 2999
- **New datum for reference axis** Q331 (absolute): Coordinate in the reference axis at which the TNC should set the bolt-hole center. Default setting = 0 input range -99999.9999 to 99999.9999
- **New datum for minor axis** Q332 (absolute): Coordinate in the minor axis at which the TNC should set the bolt-hole center. Default setting = 0 input range -99999.9999 to 99999.9999

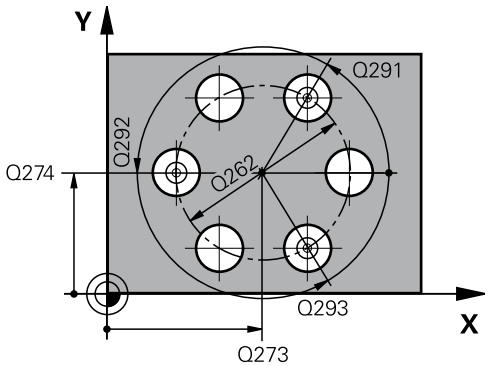

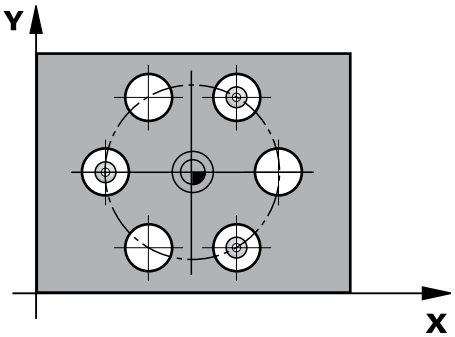

NC blocks

5 TCH PROBE 416 DATUM CIRCLE CENTER	
Q273=+50	;CENTER IN 1ST AXIS
Q274=+50	;CENTER IN 2ND AXIS
Q262=90	;NOMINAL DIAMETER
Q291=+34	;ANGLE OF 1ST HOLE
Q292=+70	;ANGLE OF 2ND HOLE
Q293=+210	;ANGLE OF 3RD HOLE
Q261=-5	;MEASURING HEIGHT
Q260=+20	;CLEARANCE HEIGHT
Q305=12	;NO. IN TABLE
Q331=+0	;DATUM
Q332=+0	;DATUM
Q303=+1	;MEAS. VALUE TRANSFER
Q381=1	;PROBE IN TS AXIS
Q382=+85	;1ST CO. FOR TS AXIS
Q383=+50	;2ND CO. FOR TS AXIS
Q384=+0	;3RD CO. FOR TS AXIS
Q333=+1	;DATUM
Q320=0	;SET-UP CLEARANCE

- **Measured-value transfer (0, 1)** Q303: Specify whether the determined datum is to be saved in the datum table or in the preset table:
  -1: Do not use! Is entered by the TNC when old programs are read in (See "Characteristics common to all touch probe cycles for datum setting")
  0: Write determined datum in the active datum table. The reference system is the active workpiece coordinate system
  1: Write the measured datum into the preset table. The reference system is the machine coordinate system (REF system).
- **Probe in TS axis** Q381: Specify whether the TNC should also set the datum in the touch probe axis:
  0: Do not set the datum in the touch probe axis
  1: Set the datum in the touch probe axis
- **Probe TS axis: Coord. 1st axis** Q382 (absolute): Coordinate of the probe point in the reference axis of the working plane at which point the datum is to be set in the touch probe axis. Only effective if Q381 = 1st input range -99999.9999 to 99999.9999
- **Probe TS axis: Coord. 2nd axis** Q383 (absolute): Coordinate of the probe point in the minor axis of the working plane at which point the datum is to be set in the touch probe axis. Only effective if Q381 = 1. Input range -99999.9999 to 99999.9999
- **Probe TS axis: Coord. 3rd axis** Q384 (absolute): Coordinate of the probe point in the touch probe axis, at which point the datum is to be set in the touch probe axis. Only effective if Q381 = 1. Input range -99999.9999 to 99999.9999
- **New datum in TS axis** Q333 (absolute): Coordinate in the touch probe axis at which the TNC should set the datum. Default setting = 0. Input range -99999.9999 to 99999.9999
- **Set-up clearance** Q320 (incremental): Additional distance between measuring point and ball tip. Q320 is added to **SET_UP** (touch probe table), and is only effective when the datum is probed in the touch probe axis. Input range 0 to 99999.9999

15.11 DATUM IN TOUCH PROBE AXIS (Cycle 417, DIN/ISO: G417)

Cycle run

Touch Probe Cycle 417 measures any coordinate in the touch probe axis and defines it as datum. If desired, the TNC can also enter the measured coordinate in a datum table or preset table.

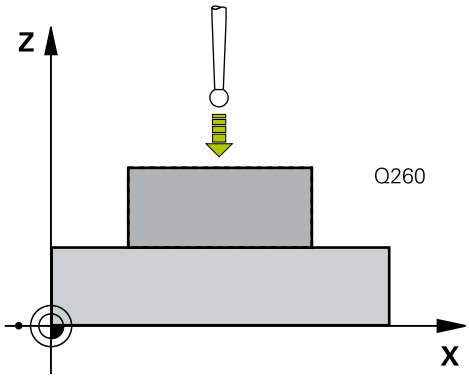

1 The TNC positions the touch probe at rapid traverse (value from **FMAX** column) following the positioning logic (See "Executing touch probe cycles", page 259) to the starting point **1**. The TNC offsets the touch probe by the safety clearance in the positive direction of the touch probe axis.
2 Then the touch probe moves in its own axis to the coordinate entered as starting point **1** and measures the actual position with a simple probing movement.
3 Finally the TNC returns the touch probe to the clearance height and processes the determined datum depending on the cycle parameters Q303 and Q305 (See "Characteristics common to all touch probe cycles for datum setting", page 284) and saves the actual value in the Q parameters listed below.

Parameter number	Meaning
Q160	Actual value of measured point

Please note while programming:

Danger of collision!
If you set a datum (Q303 = 0) with the touch probe cycle and also use probe in TS axis (Q381 = 1), then no coordinate transformation must be active.

Before a cycle definition you must have programmed a tool call to define the touch probe axis.
The TNC then sets the datum in this axis.

Cycle parameters

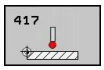

- **1st meas. point 1st axis** Q263 (absolute): Coordinate of the first touch point in the reference axis of the working plane. Input range -99999.9999 to 99999.9999
- **1st meas. point 2nd axis** Q264 (absolute): Coordinate of the first touch point in the minor axis of the working plane. Input range -99999.9999 to 99999.9999
- **1st meas. point 3rd axis** Q294 (absolute): Coordinate of the first touch point in the touch probe axis. Input range -99999.9999 to 99999.9999
- **Set-up clearance** Q320 (incremental): Additional distance between measuring point and ball tip. Q320 is added to **SET_UP** (touch probe table). Input range 0 to 99999.9999
- **Clearance height** Q260 (absolute): Coordinate in the touch probe axis at which no collision between touch probe and workpiece (fixtures) can occur. Input range -99999.9999 to 99999.9999
- **Datum number in table** Q305: Enter the number in the datum or preset table in which the TNC is to save the coordinate. If you enter Q305=0, the TNC automatically sets the display so that the new datum is on the probed surface. Input range 0 to 2999
- **New datum** Q333 (absolute): Coordinate at which the TNC should set the datum. Default setting = 0 input range -99999.9999 to 99999.9999
- **Measured-value transfer (0, 1)** Q303: Specify whether the determined datum is to be saved in the datum table or in the preset table:
  -1: Do not use! Is entered by the TNC when old programs are read in (See "Characteristics common to all touch probe cycles for datum setting")
  0: Write determined datum in the active datum table. The reference system is the active workpiece coordinate system
  1: Write the measured datum into the preset table. The reference system is the machine coordinate system (REF system).

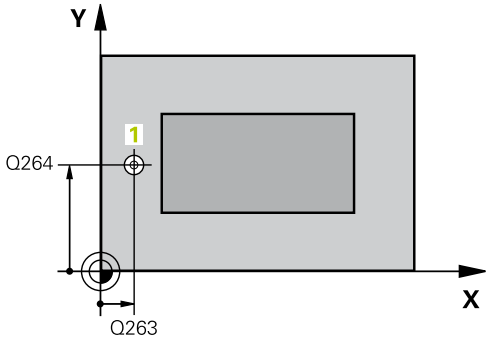

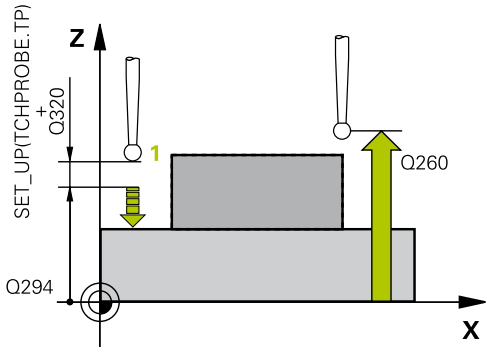

NC blocks

5 TCH PROBE 417 DATUM IN TS AXIS	
Q263=+25	;1ST POINT 1ST AXIS
Q264=+25	;1ST POINT 2ND AXIS
Q294=+25	;1ST POINT 3RD AXIS
Q320=0	;SET-UP CLEARANCE
Q260=+50	;CLEARANCE HEIGHT
Q305=0	;NO. IN TABLE
Q333=+0	;DATUM
Q303=+1	;MEAS. VALUE TRANSFER

15.12 DATUM AT CENTER OF 4 HOLES (Cycle 418, DIN/ISO: G418)

Cycle run

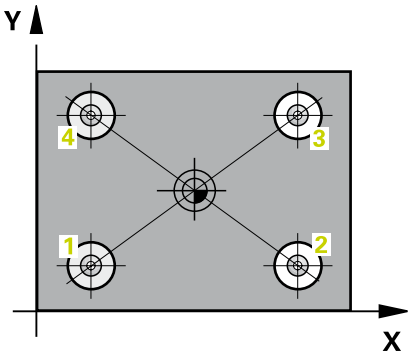

Touch Probe Cycle 418 calculates the intersection of the lines connecting opposite holes and sets the datum at the intersection. If desired, the TNC can also enter the intersection into a datum table or preset table.

1 Following the positioning logic (See "Executing touch probe cycles", page 259), the control positions the touch probe at rapid traverse (value from column **FMAX**) to the center of the first hole **1**.
2 Then the probe moves to the entered measuring height and probes four points to find the first hole center.
3 The touch probe returns to the clearance height and then to the position entered as center of the second hole **2**.
4 The TNC moves the touch probe to the entered measuring height and probes four points to find the second hole center.
5 The TNC repeats steps 3 and 4 for holes **3** and **4**.
6 Finally the TNC returns the touch probe to the clearance height and processes the determined datum depending on the cycle parameters Q303 and Q305 (See "Characteristics common to all touch probe cycles for datum setting", page 284). The TNC calculates the datum as the intersection of the lines connecting the centers of holes **1**/**3** and **2**/**4** and saves the actual values in the Q parameters listed below.
7 If desired, the TNC subsequently measures the datum in the touch probe axis in a separate probing.

Parameter number	Meaning
Q151	Actual value of intersection point in reference axis
Q152	Actual value of intersection point in minor axis

Please note while programming:

Danger of collision!
If you set a datum (Q303 = 0) with the touch probe cycle and also use probe in TS axis (Q381 = 1), then no coordinate transformation must be active.

Before a cycle definition you must have programmed a tool call to define the touch probe axis.

Cycle parameters

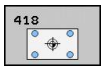

- **1st hole: Center in 1st axis** Q268 (absolute): Center of the first hole in the reference axis of the working plane. Input range -99999.9999 to 99999.9999
- **1st hole: Center in 2nd axis** Q269 (absolute): Center of the first hole in the minor axis of the working plane. Input range -99999.9999 to 99999.9999
- **2nd hole: Center in 1st axis** Q270 (absolute): Center of the second hole in the reference axis of the working plane. Input range -99999.9999 to 99999.9999
- **2nd hole: Center in 2nd axis** Q271 (absolute): Center of the second hole in the minor axis of the working plane. Input range -99999.9999 to 99999.9999
- **3rd center in 1st axis** Q316 (absolute): center of the 3rd hole in the reference axis of the working plane. Input range -99999.9999 to 99999.9999
- **3rd center in 2nd axis** Q317 (absolute): center of the 3rd hole in the minor axis of the working plane. Input range -99999.9999 to 99999.9999
- **4th center in 1st axis** Q318 (absolute): center of the 4th hole in the reference axis of the working plane. Input range -99999.9999 to 99999.9999
- **4th center in 2nd axis** Q319 (absolute): center of the 4th hole in the minor axis of the working plane. Input range -99999.9999 to 99999.9999
- **Measuring height in the touch probe axis** Q261 (absolute): Coordinate of the ball tip center (= touch point) in the touch probe axis in which the measurement is to be made. Input range -99999.9999 to 99999.9999
- **Clearance height** Q260 (absolute): Coordinate in the touch probe axis at which no collision between touch probe and workpiece (fixtures) can occur. Input range -99999.9999 to 99999.9999
- **Datum number in table** Q305: Enter the number in the datum or preset table in which the TNC is to save the coordinates of the line intersection. If you enter Q305=0, the TNC automatically sets the display so that the new datum is at the intersection of the connecting lines. Input range 0 to 2999
- **New datum for reference axis** Q331 (absolute): Coordinate in the reference axis at which the TNC should set the calculated intersection of the connecting lines. Default setting = 0 input range -99999.9999 to 99999.9999

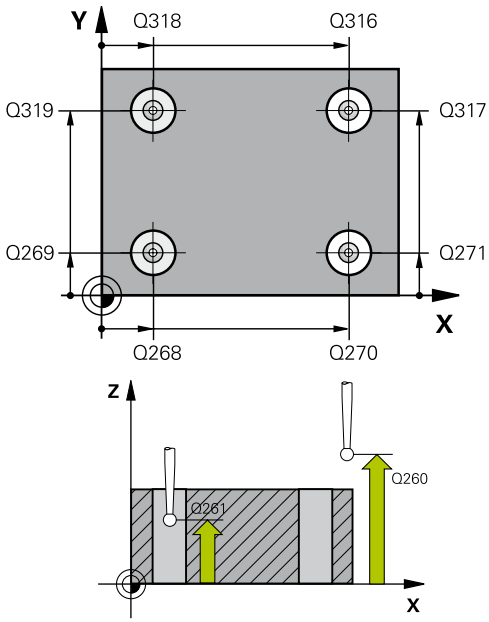

NC blocks

5 TCH PROBE 418 DATUM FROM 4 HOLES	
Q268=+20	;1ST CENTER 1ST AXIS
Q269=+25	;1ST CENTER 2ND AXIS
Q270=+150	;2ND CENTER 1ST AXIS
Q271=+25	;2ND CENTER 2ND AXIS
Q316=+150	;3RD CENTER 1ST AXIS
Q317=+85	;3RD CENTER 2ND AXIS
Q318=+22	;4TH CENTER 1ST AXIS
Q319=+80	;4TH CENTER 2ND AXIS
Q261=-5	;MEASURING HEIGHT
Q260=+10	;CLEARANCE HEIGHT
Q305=12	;NO. IN TABLE
Q331=+0	;DATUM
Q332=+0	;DATUM
Q303=+1	;MEAS. VALUE TRANSFER
Q381=1	;PROBE IN TS AXIS
Q382=+85	;1ST CO. FOR TS AXIS
Q383=+50	;2ND CO. FOR TS AXIS
Q384=+0	;3RD CO. FOR TS AXIS
Q333=+0	;DATUM

- **New datum for minor axis** Q332 (absolute): Coordinate in the minor axis at which the TNC should set the calculated intersection of the connecting lines. Default setting = 0 input range -99999.9999 to 99999.9999
- **Measured-value transfer (0, 1)** Q303: Specify whether the determined datum is to be saved in the datum table or in the preset table:
  -1: Do not use! Is entered by the TNC when old programs are read in (See "Characteristics common to all touch probe cycles for datum setting")
  0: Write determined datum in the active datum table. The reference system is the active workpiece coordinate system
  1: Write the measured datum into the preset table. The reference system is the machine coordinate system (REF system).
- **Probe in TS axis** Q381: Specify whether the TNC should also set the datum in the touch probe axis:
  0: Do not set the datum in the touch probe axis
  1: Set the datum in the touch probe axis
- **Probe TS axis: Coord. 1st axis** Q382 (absolute): Coordinate of the probe point in the reference axis of the working plane at which point the datum is to be set in the touch probe axis. Only effective if Q381 = 1st input range -99999.9999 to 99999.9999
- **Probe TS axis: Coord. 2nd axis** Q383 (absolute): Coordinate of the probe point in the minor axis of the working plane at which point the datum is to be set in the touch probe axis. Only effective if Q381 = 1. Input range -99999.9999 to 99999.9999
- **Probe TS axis: Coord. 3rd axis** Q384 (absolute): Coordinate of the probe point in the touch probe axis, at which point the datum is to be set in the touch probe axis. Only effective if Q381 = 1. Input range -99999.9999 to 99999.9999
- **New datum in TS axis** Q333 (absolute): Coordinate in the touch probe axis at which the TNC should set the datum. Default setting = 0. Input range -99999.9999 to 99999.9999

15.13 DATUM IN ONE AXIS (Cycle 419, DIN/ISO: G419)

Cycle run

Touch Probe Cycle 419 measures any coordinate in any axis and defines it as datum. If desired, the TNC can also enter the measured coordinate in a datum table or preset table.

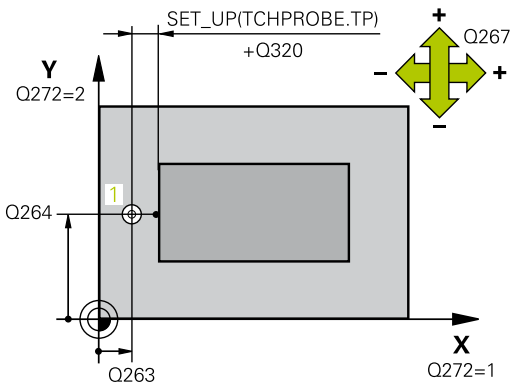

1 The TNC positions the touch probe at rapid traverse (value from **FMAX** column) following the positioning logic (See "Executing touch probe cycles", page 259) to the starting point **1**. The TNC offsets the touch probe by the safety clearance in the direction opposite the programmed probing direction.
2 Then the touch probe moves to the programmed measuring height and measures the actual position with a simple probing movement.
3 Finally the TNC returns the touch probe to the clearance height and processes the determined datum depending on the cycle parameters Q303 and Q305. (See "Characteristics common to all touch probe cycles for datum setting", page 284)

Please note while programming:

Before a cycle definition you must have programmed a tool call to define the touch probe axis.

If you use Cycle 419 several times in succession to save the datum in more than one axis in the preset table, you must activate the preset number last written to by Cycle 419 after every execution of Cycle 419 (this is not required if you overwrite the active preset).

Cycle parameters

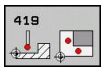

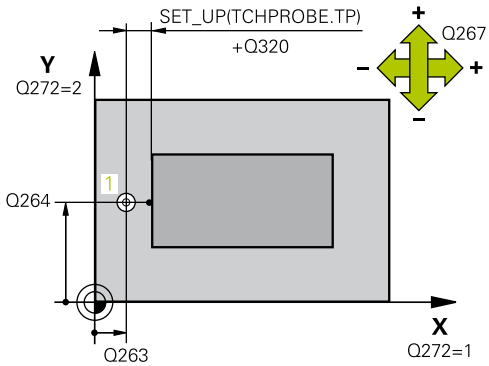

- **1st meas. point 1st axis** Q263 (absolute): Coordinate of the first touch point in the reference axis of the working plane. Input range -99999.9999 to 99999.9999
- **1st meas. point 2nd axis** Q264 (absolute): Coordinate of the first touch point in the minor axis of the working plane. Input range -99999.9999 to 99999.9999
- **Measuring height in the touch probe axis** Q261 (absolute): Coordinate of the ball tip center (= touch point) in the touch probe axis in which the measurement is to be made. Input range -99999.9999 to 99999.9999

- **Set-up clearance** Q320 (incremental): Additional distance between measuring point and ball tip. Q320 is added to **SET_UP** (touch probe table). Input range 0 to 99999.9999
- **Clearance height** Q260 (absolute): Coordinate in the touch probe axis at which no collision between touch probe and workpiece (fixtures) can occur. Input range -99999.9999 to 99999.9999
- **Measuring axis (1...3: 1 = principal axis)** Q272: Axis in which the measurement is to be made:
  1: Principal axis = measuring axis
  2: Secondary axis = measuring axis
  3: Touch probe axis = measuring axis

Axis assignment

Active touch probe axis: Q272= 3	Corresponding reference axis: Q272= 1	Corresponding minor axis: Q272= 2
Z	X	Y
Y	Z	X
X	Y	Z

- **Traverse direction 1** Q267: Direction in which the probe is to approach the workpiece:
  -1: Negative Traverse direction
  +1: Positive traverse direction
- **Datum number in table** Q305: Enter the number in the datum or preset table in which the TNC is to save the coordinate. If you enter Q305=0, the TNC automatically sets the display so that the new datum is on the probed surface. Input range 0 to 2999
- **New datum** Q333 (absolute): Coordinate at which the TNC should set the datum. Default setting = 0 input range -99999.9999 to 99999.9999
- **Measured-value transfer (0, 1)** Q303: Specify whether the determined datum is to be saved in the datum table or in the preset table:
  -1: Do not use! Is entered by the TNC when old programs are read in (See "Characteristics common to all touch probe cycles for datum setting")
  0: Write determined datum in the active datum table. The reference system is the active workpiece coordinate system
  1: Write the measured datum into the preset table. The reference system is the machine coordinate system (REF system).

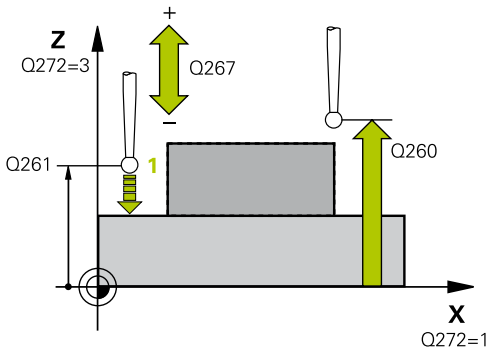

NC blocks

```
5 TCH PROBE 419 DATUM IN ONE AXIS
    Q263=+25   ;1ST POINT 1ST AXIS
    Q264=+25   ;1ST POINT 2ND AXIS
    Q261=+25   ;MEASURING HEIGHT
    Q320=0     ;SET-UP CLEARANCE
    Q260=+50   ;CLEARANCE HEIGHT
    Q272=+1    ;MEASURING AXIS
    Q267=+1    ;TRAVERSE DIRECTION
    Q305=0     ;NO. IN TABLE
    Q333=+0    ;DATUM
    Q303=+1    ;MEAS. VALUE
               TRANSFER
```

15.14 Example: Datum setting in center of a circular segment and on top surface of workpiece

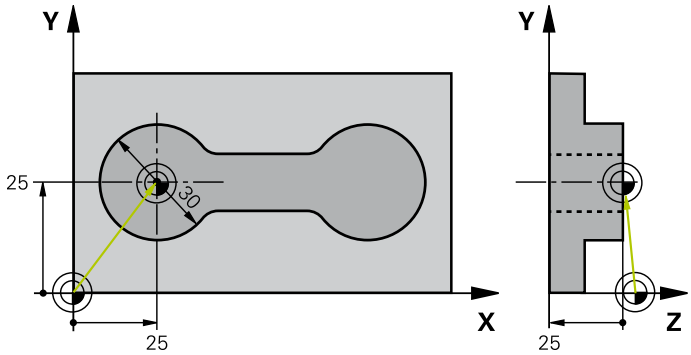

0 BEGIN PGM CYC413 MM		
1 TOOL CALL 69 Z		Call tool 0 to define the touch probe axis
2 TCH PROBE 413 DATUM OUTSIDE CIRCLE		
Q321=+25	;CENTER 1ST AXIS	Center of circle: X coordinate
Q322=+25	;CENTER 2ND AXIS	Center of circle: Y coordinate
Q262=30	;NOMINAL DIAMETER	Circle diameter
Q325=+90	;STARTING ANGLE	Polar coordinate angle for 1st touch point
Q247=+45	;STEPPING ANGLE	Stepping angle for calculating the starting points 2 to 4
Q261=-5	;MEASURING HEIGHT	Coordinate in the touch probe axis in which the measurement is made
Q320=2	;SET-UP CLEARANCE	Safety clearance in addition to SET_UP column
Q260=+10	;CLEARANCE HEIGHT	Height in the touch probe axis at which the probe can traverse without collision
Q301=0	;MOVE TO CLEARANCE	Do not move to clearance height between measuring points
Q305=0	;NO. IN TABLE	Set display
Q331=+0	;DATUM	Set the display in X to 0
Q332=+10	;DATUM	Set the display in Y to 10
Q303=+0	;MEAS. VALUE TRANSFER	Without function, since display is to be set
Q381=1	;PROBE IN TS AXIS	Also set datum in the touch probe axis
Q382=+25	;1ST CO. FOR TS AXIS	X coordinate of touch point
Q383=+25	;2ND CO. FOR TS AXIS	Y coordinate of touch point
Q384=+25	;3RD CO. FOR TS AXIS	Z coordinate of touch point
Q333=+0	;DATUM	Set the display in Z to 0
Q423=4	;NO. OF PROBE POINTS	Measure circle with 4 probes
Q365=0	;TYPE OF TRAVERSE	Move on circular path between measuring points
3 CALL PGM 35K47		Call part program
4 END PGM CYC413 MM		

15.15 Example: Datum setting on top surface of workpiece and in center of a bolt hole circle

The measured bolt hole center shall be written in the preset table so that it may be used at a later time.

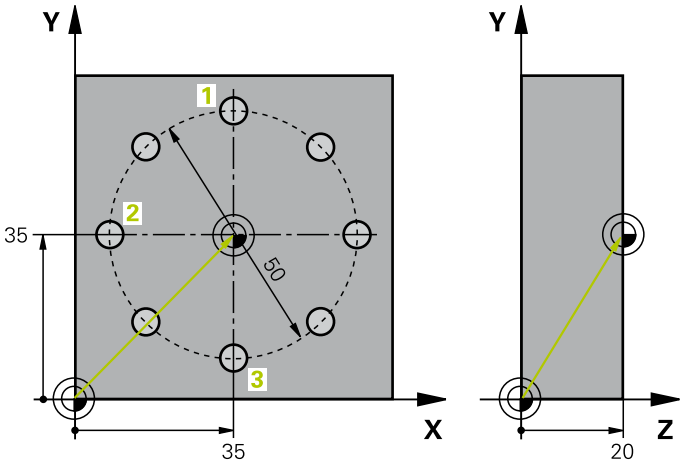

0 BEGIN PGM CYC416 MM		
1 TOOL CALL 69 Z		Call tool 0 to define the touch probe axis
2 TCH PROBE 417 DATUM IN TS AXIS		Cycle definition for datum setting in the touch probe axis
Q263=+7.5	;1ST POINT 1ST AXIS	Touch point: X coordinate
Q264=+7.5	;1ST POINT 2ND AXIS	Touch point: Y coordinate
Q294=+25	;1ST POINT 3RD AXIS	Touch point: Z coordinate
Q320=0	;SET-UP CLEARANCE	Safety clearance in addition to SET_UP column
Q260=+50	;CLEARANCE HEIGHT	Height in the touch probe axis at which the probe can traverse without collision
Q305=1	;NO. IN TABLE	Write Z coordinate in line 1
Q333=+0	;DATUM	Set touch-probe axis to 0
Q303=+1	;MEAS. VALUE TRANSFER	In the preset table PRESET.PR, save the calculated datum referenced to the machine-based coordinate system (REF system)
3 TCH PROBE 416 DATUM CIRCLE CENTER		
Q273=+35	;CENTER IN 1ST AXIS	Center of the bolt hole circle: X coordinate
Q274=+35	;CENTER IN 2ND AXIS	Center of the bolt hole circle: Y coordinate
Q262=50	;NOMINAL DIAMETER	Diameter of the bolt hole circle
Q291=+90	;ANGLE OF 1ST HOLE	Polar coordinate angle for 1st hole center 1
Q292=+180	;ANGLE OF 2ND HOLE	Polar coordinate angle for 2nd hole center 2
Q293=+270	;ANGLE OF 3RD HOLE	Polar coordinate angle for 3rd hole center 3
Q261=+15	;MEASURING HEIGHT	Coordinate in the touch probe axis in which the measurement is made
Q260=+10	;CLEARANCE HEIGHT	Height in the touch probe axis at which the probe can traverse without collision
Q305=1	;NO. IN TABLE	Enter center of bolt hole circle (X and Y) in line 1
Q331=+0	;DATUM	
Q332=+0	;DATUM	

Example: Datum setting on top surface of workpiece and in center of a bolt hole circle 15.15

Q303=+1	;MEAS. VALUE TRANSFER	In the preset table PRESET.PR, save the calculated datum referenced to the machine-based coordinate system (REF system)
Q381=0	;PROBE IN TS AXIS	Do not set a datum in the touch probe axis
Q382=+0	;1ST CO. FOR TS AXIS	No function
Q383=+0	;2ND CO. FOR TS AXIS	No function
Q384=+0	;3RD CO. FOR TS AXIS	No function
Q333=+0	;DATUM	No function
Q320=0	;SET-UP CLEARANCE	Safety clearance in addition to SET_UP column
4 CYCL DEF 247 DATUM SETTING		Activate new preset with Cycle 247
Q339=1	;DATUM NUMBER	
6 CALL PGM 35KLZ		Call part program
7 END PGM CYC416 MM		

16

Touch Probe Cycles: Automatic Workpiece Inspection

16.1 Fundamentals

Overview

When running touch probe cycles, Cycle 8 MIRROR IMAGE, Cycle 11 SCALING and Cycle 26 AXIS-SPECIFIC SCALING must not be active.

HEIDENHAIN only gives warranty for the function of the probing cycles if HEIDENHAIN touch probes are used.

The TNC must be specially prepared by the machine tool builder for the use of a 3-D touch probe.

Refer to your machine manual.

The TNC offers twelve cycles for measuring workpieces automatically.

Cycle	Soft key	Page
0 REFERENCE PLANE Measuring a coordinate in a selectable axis		336
1 POLAR DATUM PLANE Measuring a point in a probing direction	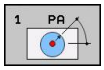	337
420 MEASURE ANGLE Measuring an angle in the working plane	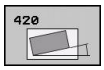	338
421 MEASURE HOLE Measuring the position and diameter of a hole	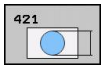	340
422 MEASURE CIRCLE OUTSIDE Measuring the position and diameter of a circular stud	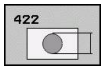	343
423 MEASURE RECTANGLE INSIDE Measuring the position, length and width of a rectangular pocket	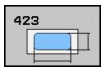	346
424 MEASURE RECTANGLE OUTSIDE Measuring the position, length and width of a rectangular stud	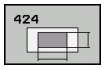	350
425 MEASURE INSIDE WIDTH (2nd soft-key level) Measuring slot width	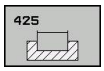	353
426 MEASURE RIDGE WIDTH (2nd soft-key row) Measuring the width of a ridge	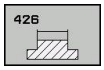	356

Cycle	Soft key	Page
427 MEASURE COORDINATE (2nd soft-key row) Measuring any coordinate in a selectable axis	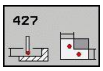	358
430 MEASURE BOLT HOLE CIRCLE (2nd soft-key row) Measuring position and diameter of a bolt hole circle	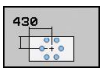	360
431 MEASURE PLANE (2nd soft-key row) Measuring the A and B axis angles of a plane	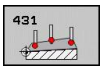	363

Recording the results of measurement

For all cycles in which you automatically measure workpieces (with the exception of Cycles 0 and 1), you can have the TNC record the measurement results. In the respective probing cycle you can define if the TNC is to

- Save the measuring log to a file
- Interrupt program run and display the measuring log on the screen
- Create no measuring log

If you want to save the measuring log to a file, the TNC, by default, saves the data as an ASCII file in the directory TNC:\..

Use the HEIDENHAIN data transfer software TNCRemo if you wish to output the measuring log over the data interface.

Example: Measuring log for touch probe cycle 421:

Measuring log for Probing Cycle 421 Hole Measuring

Date: 30-06-2005

Time: 6:55:04

Measuring program: TNC:\GEH35712\CHECK1.H

Nominal values:

Center in reference axis:	50.0000
Center in minor axis:	65.0000
Diameter:	12.0000

Given limit values:

Maximum limit for center in reference axis:	50.1000
Minimum limit for center in reference axis:	49.9000
Maximum limit for center in minor axis:	65.1000
Minimum limit for center in minor axis:	64.9000
Maximum dimension for hole:	12.0450
Minimum dimension for hole:	12.0000

Actual values:

Center in reference axis:	50.0810
Center in minor axis:	64.9530
Diameter:	12.0259

Deviations:

Center in reference axis:	0.0810
Center in minor axis:	-0.0470
Diameter:	0.0259

Further measuring results: Measuring height:	-5.0000

End of measuring log

Measurement results in Q parameters

The TNC saves the measurement results of the respective touch probe cycle in the globally effective Q parameters Q150 to Q160. Deviations from the nominal value are saved in the parameters Q161 to Q166. Note the table of result parameters listed with every cycle description.

During cycle definition the TNC also shows the result parameters for the respective cycle in a help graphic (see figure at upper right). The highlighted result parameter belongs to that input parameter.

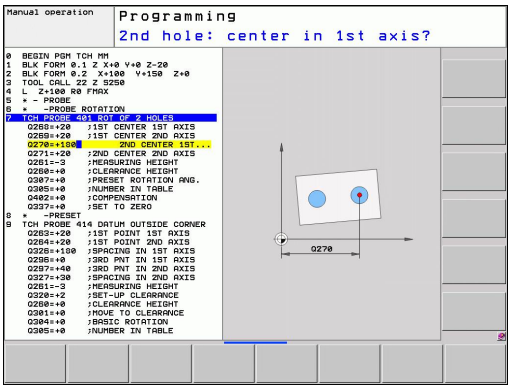

Classification of results

For some cycles you can inquire the status of measuring results through the globally effective Q parameters Q180 to Q182.

Class of results	Parameter value
Measurement results are within tolerance	Q180 = 1
Rework is required	Q181 = 1
Scrap	Q182 = 1

The TNC sets the rework or scrap marker as soon as one of the measuring values falls outside of tolerance. To determine which of the measuring results lies outside of tolerance, check the measuring log, or compare the respective measuring results (Q150 to Q160) with their limit values.

In Cycle 427 the TNC assumes that you are measuring an outside dimension (stud). However, you can correct the status of the measurement by entering the correct maximum and minimum dimension together with the probing direction.

> The TNC also sets the status markers if you have not defined any tolerance values or maximum/minimum dimensions.

Tolerance monitoring

For most of the cycles for workpiece inspection you can have the TNC perform tolerance monitoring. This requires that you define the necessary limit values during cycle definition. If you do not wish to monitor for tolerances, simply leave the 0 (the default value) in the monitoring parameters.

Tool monitoring

For some cycles for workpiece inspection you can have the TNC perform tool monitoring. The TNC then monitors whether

- The tool radius should be compensated because of the deviations from the nominal value (values in Q16x).
- The deviations from the nominal value (values in Q16x) are greater than the tool breakage tolerance.

Tool compensation

This function works only:

- If the tool table is active.
- If tool monitoring is switched on in the cycle (enter a tool name or **Q330** unequal to 0). Select the tool name input by soft key. The TNC no longer displays the right single quotation mark.

If you perform several compensation measurements, the TNC adds the respective measured deviation to the value stored in the tool table.

The TNC always compensates the tool radius in the DR column of the tool table, even if the measured deviation lies within the given tolerance. You can inquire whether re-working is necessary via parameter Q181 in the NC program (Q181=1: must be reworked).

For Cycle 427:

- If an axis of the active working plane is defined as measuring axis (Q272 = 1 or 2), the TNC compensates the tool radius as described above. From the defined traversing direction (Q267) the TNC determines the direction of compensation.
- If the touch probe axis is defined as measuring axis (Q272 = 3), the TNC compensates the tool length.

Tool breakage monitoring

This function works only:
- If the tool table is active.
- If tool monitoring is switched on in the cycle (enter Q330 not equal to 0).
- If the breakage tolerance RBREAK for the tool number entered in the table is greater than 0 (see also the User's Manual, section 5.2 "Tool Data").

The TNC will output an error message and stop program run if the measured deviation is greater than the breakage tolerance of the tool. At the same time the tool will be deactivated in the tool table (column TL = L).

Reference system for measurement results

The TNC transfers all the measurement results to the result parameters and the log file in the active coordinate system, or as the case may be, the shifted and/or rotated/tilted coordinate system.

16.2 DATUM PLANE (Cycle 0, DIN/ISO: G55)

Cycle run

1 The touch probe moves at rapid traverse (value from **FMAX** column) to the starting position **1** programmed in the cycle.
2 Then the touch probe runs the probing process at the probing feed rate (column **F**). The probing direction is defined in the cycle.
3 After the TNC has saved the position, the probe retracts to the starting point and saves the measured coordinate in a Q parameter. The TNC also stores the coordinates of the touch probe position at the time of the triggering signal in the parameters Q115 to Q119. For the values in these parameters the TNC does not account for the stylus length and radius.

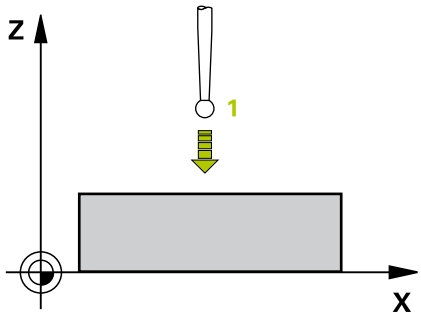

Please note while programming:

Danger of collision!
Pre-position the touch probe in order to avoid a collision when the programmed pre-positioning point is approached.

Cycle parameters

- **Parameter number for result:** Enter the number of the Q parameter to which you want to assign the coordinate. Input range 0 to 1999
- **Probing axis/Probing direction**: Enter the probing axis with the axis selection keys or ASCII keyboard and the algebraic sign for the probing direction. Confirm your entry with the ENT key. Input range: All NC axes
- **Nominal position value:** Use the axis selection keys or the ASCII keyboard to enter all coordinates of the nominal pre-positioning point values for the touch probe. Input range -99999.9999 to 99999.9999
- To conclude the input, press the ENT key.

NC blocks

```
67 TCH PROBE 0.0 REF. PLANE Q5 X-
68 TCH PROBE 0.1 X+5 Y+0 Z-5
```

16.3 POLAR DATUM PLANE (Cycle 1)

Cycle run

Touch Probe Cycle 1 measures any position on the workpiece in any direction.

1 The touch probe moves at rapid traverse (value from **FMAX** column) to the starting position **1** programmed in the cycle.
2 Then the touch probe runs the probing process at the probing feed rate (column **F**). During probing the TNC moves simultaneously in two axes (depending on the probing angle). The probing direction is defined by the polar angle entered in the cycle.
3 After the TNC has saved the position, the probe returns to the starting point. The TNC also stores the coordinates of the touch probe position at the time of the triggering signal in parameters Q115 to Q119.

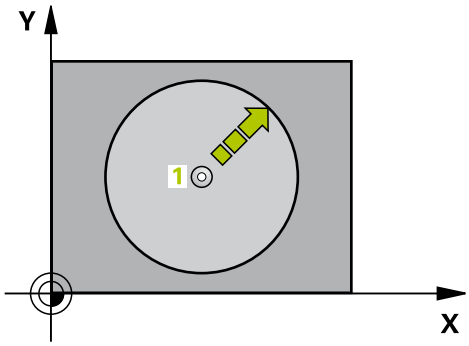

Please note while programming:

Danger of collision!
Pre-position the touch probe in order to avoid a collision when the programmed pre-positioning point is approached.

The probing axis defined in the cycle specifies the probing plane:
Probing axis X: X/Y plane
Probing axis Y: Y/Z plane
Probing axis Z: Z/X plane

Cycle parameters

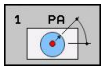

- **Probing axis:** Enter the probing axis with the axis selection keys or ASCII keyboard. Confirm your entry with the ENT key. Input range: **X**, **Y** or **Z**
- **Probing angle:** Angle, measured from the probing axis, at which the touch probe is to move. Input range -180.0000 to 180.0000
- **Nominal position value:** Use the axis selection keys or the ASCII keyboard to enter all coordinates of the nominal pre-positioning point values for the touch probe. Input range -99999.9999 to 99999.9999
- To conclude the input, press the ENT key.

NC blocks

```
67 TCH PROBE 1.0 POLAR REFERENCE PLANE
68 TCH PROBE 1.1 X ANGLE: +30
69 TCH PROBE 1.2 X+5 Y+0 Z-5
```

16.4 MEASURE ANGLE (Cycle 420, DIN/ISO: G420)

Cycle run

Touch Probe Cycle 420 measures the angle that any straight surface on the workpiece describes with respect to the reference axis of the working plane.

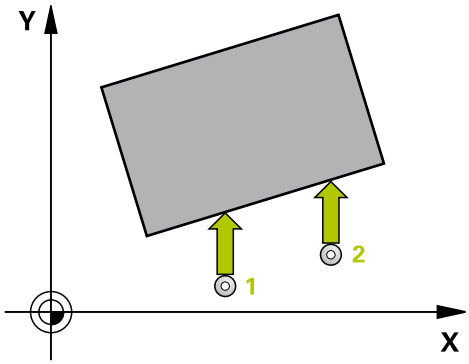

1 The TNC positions the touch probe at rapid traverse (value from **FMAX** column) following the positioning logic (See "Executing touch probe cycles", page 259) to the starting point **1**. The TNC offsets the touch probe by the safety clearance in the direction opposite to the defined traverse direction.
2 Then the touch probe moves to the entered measuring height and runs the first probing process at the probing feed rate (column **F**).
3 Then the touch probe moves to the next starting position **2** and from there probes the second position.
4 The TNC returns the touch probe to the clearance height and saves the measured angle in the following Q parameter:

Parameter number	Meaning
Q150	The measured angle is referenced to the reference axis of the machining plane.

Please note while programming:

Before a cycle definition you must have programmed a tool call to define the touch probe axis.

If touch probe axis = measuring axis, set **Q263** equal to **Q265** if the angle about the A axis is to be measured; set **Q263** not equal to **Q265** if the angle is to be measured about the B axis.

Cycle parameters

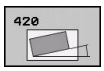

- **1st meas. point 1st axis** Q263 (absolute): Coordinate of the first touch point in the reference axis of the working plane. Input range -99999.9999 to 99999.9999
- **1st meas. point 2nd axis** Q264 (absolute): Coordinate of the first touch point in the minor axis of the working plane. Input range -99999.9999 to 99999.9999
- **2nd meas. point 1st axis** Q265 (absolute): Coordinate of the second touch point in the reference axis of the working plane. Input range -99999.9999 to 99999.9999

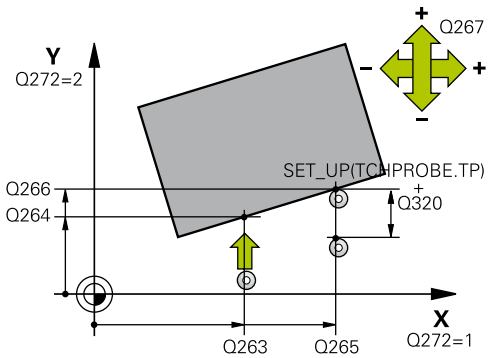

- **2nd meas. point 2nd axis** Q266 (absolute): Coordinate of the second touch point in the minor axis of the working plane. Input range -99999.9999 to 99999.9999
- **Measuring axis** Q272: Axis in which the measurement is to be made:
  1: Principal axis = measuring axis
  2: Secondary axis = measuring axis
  3: Touch probe axis = measuring axis
- **Traverse direction 1** Q267: Direction in which the probe is to approach the workpiece:
  -1: Negative Traverse direction
  +1: Positive traverse direction
- **Measuring height in the touch probe axis** Q261 (absolute): Coordinate of the ball tip center (= touch point) in the touch probe axis in which the measurement is to be made. Input range -99999.9999 to 99999.9999
- **Set-up clearance** Q320 (incremental): Additional distance between measuring point and ball tip. Q320 is added to **SET_UP** (touch probe table). Input range 0 to 99999.9999
- **Clearance height** Q260 (absolute): Coordinate in the touch probe axis at which no collision between touch probe and workpiece (fixtures) can occur. Input range -99999.9999 to 99999.9999
- **Traversing to clearance height** Q301: definition of how the touch probe is to move between the measuring points:
  0: Move at measuring height between measuring points
  1: Move at clearance height between measuring points
- **Measuring log** Q281: Define whether the TNC should create a measuring log:
  0: Do not create a measuring log
  1: Create a measuring log: The TNC saves the **log file TCHPR420.TXT** as standard in the directory TNC:\.
  2: Interrupt program run and output measuring log to the TNC screen. Resume program run with NC Start.

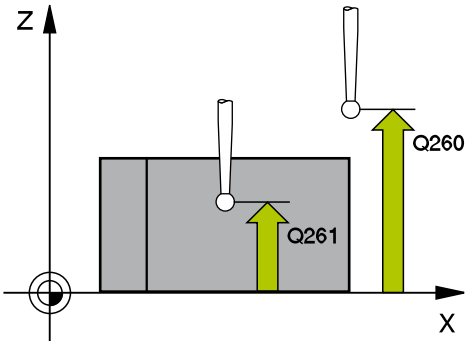

NC blocks

```
5 TCH PROBE 420 MEASURE ANGLE
    Q263=+10  ;1ST POINT 1ST AXIS
    Q264=+10  ;1ST POINT 2ND AXIS
    Q265=+15  ;2ND POINT 1ST AXIS
    Q266=+95  ;2ND POINT 2ND AXIS
    Q272=1    ;MEASURING AXIS
    Q267=-1   ;TRAVERSE DIRECTION
    Q261=-5   ;MEASURING HEIGHT
    Q320=0    ;SET-UP CLEARANCE
    Q260=+10  ;CLEARANCE HEIGHT
    Q301=1    ;MOVE TO CLEARANCE
    Q281=1    ;MEASURING LOG
```

16.5 MEASURE HOLE (Cycle 421, DIN/ISO: G421)

Cycle run

Touch Probe Cycle 421 measures the center and diameter of a hole (or circular pocket). If you define the corresponding tolerance values in the cycle, the TNC makes a nominal-to-actual value comparison and saves the deviation value in system parameters.

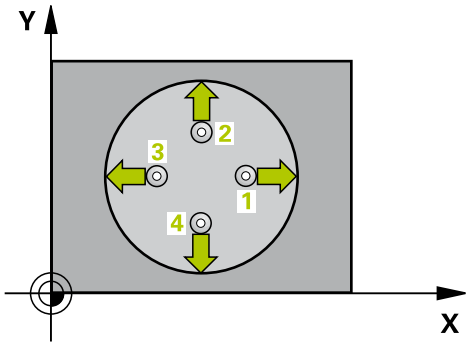

1 The TNC positions the touch probe at rapid traverse (value from **FMAX** column) following the positioning logic (See "Executing touch probe cycles", page 259) to the starting point **1**. The TNC calculates the touch points from the data in the cycle and the safety clearance from the SET_UP column of the touch probe table.
2 Then the touch probe moves to the entered measuring height and runs the first probing process at the probing feed rate (column **F**). The TNC derives the probing direction automatically from the programmed starting angle.
3 Then the touch probe moves in a circular arc either at measuring height or at clearance height to the next starting point **2** and probes the second touch point.
4 The TNC positions the probe to starting point **3** and then to starting point **4** to probe the third and fourth touch points.
5 Finally the TNC returns the touch probe to the clearance height and saves the actual values and the deviations in the following Q parameters:

Parameter number	Meaning
Q151	Actual value of center in reference axis
Q152	Actual value of center in minor axis
Q153	Actual value of diameter
Q161	Deviation at center of reference axis
Q162	Deviation at center of minor axis
Q163	Deviation from diameter

Please note while programming:

Before a cycle definition you must have programmed a tool call to define the touch probe axis.

The smaller the angle, the less accurately the TNC can calculate the hole dimensions. Minimum input value: 5°

Cycle parameters

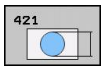

- **Center in 1st axis** Q273 (absolute): Center of the hole in the reference axis of the working plane. Input range -99999.9999 to 99999.9999
- **Center in 2nd axis** Q274 (absolute value): Center of the hole in the minor axis of the working plane. Input range -99999.9999 to 99999.9999
- **Nominal diameter** Q262: Enter the diameter of the hole. Input range 0 to 99999.9999
- **Starting angle** Q325 (absolute): Angle between the reference axis of the working plane and the first touch point. Input range -360.000 to 360.000
- **Stepping angle** Q247 (incremental): Angle between two measuring points. The algebraic sign of the stepping angle determines the direction of rotation (negative = clockwise) in which the touch probe moves to the next measuring point. If you wish to probe a circular arc instead of a complete circle, then program the stepping angle to be less than 90°. Input range -120.000 to 120.000
- **Measuring height in the touch probe axis** Q261 (absolute): Coordinate of the ball tip center (= touch point) in the touch probe axis in which the measurement is to be made. Input range -99999.9999 to 99999.9999
- **Set-up clearance** Q320 (incremental): Additional distance between measuring point and ball tip. Q320 is added to **SET_UP** (touch probe table). Input range 0 to 99999.9999
- **Clearance height** Q260 (absolute): Coordinate in the touch probe axis at which no collision between touch probe and workpiece (fixtures) can occur. Input range -99999.9999 to 99999.9999
- **Traversing to clearance height** Q301: definition of how the touch probe is to move between the measuring points:
  0: Move at measuring height between measuring points
  1: Move at clearance height between measuring points
- **Maximum limit of size for hole** Q275: Maximum permissible diameter for the hole (circular pocket). Input range 0 to 99999.9999
- **Minimum limit of size for hole** Q276: Minimum permissible diameter for the hole (circular pocket). Input range 0 to 99999.9999
- **Tolerance for center 1st axis** Q279: Permissible position deviation in the reference axis of the working plane. Input range 0 to 99999.9999

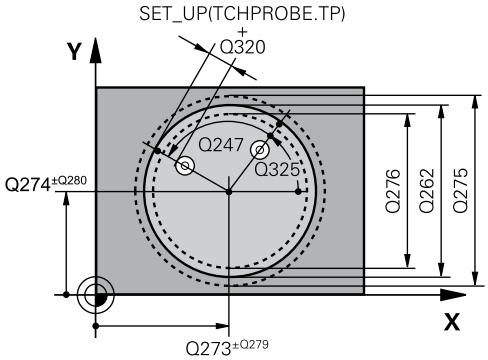

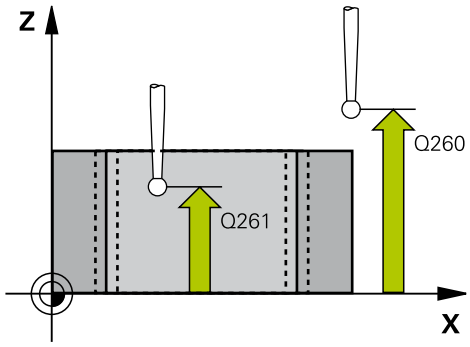

NC blocks

5 TCH PROBE 421 MEASURE HOLE	
Q273=+50	;CENTER IN 1ST AXIS
Q274=+50	;CENTER IN 2ND AXIS
Q262=75	;NOMINAL DIAMETER
Q325=+0	;STARTING ANGLE
Q247=+60	;STEPPING ANGLE
Q261=-5	;MEASURING HEIGHT
Q320=0	;SET-UP CLEARANCE
Q260=+20	;CLEARANCE HEIGHT
Q301=1	;MOVE TO CLEARANCE
Q275=75.12	;MAXIMUM DIMENSION
Q276=74.95	;MINIMUM DIMENSION
Q279=0.1	;TOLERANCE 1ST CENTER
Q280=0.1	;TOLERANCE 2ND CENTER
Q281=1	;MEASURING LOG
Q309=0	;PGM STOP IF ERROR
Q330=0	;TOOL
Q423=4	;NO. OF PROBE POINTS
Q365=1	;TYPE OF TRAVERSE

- **Tolerance for center 2nd axis** Q280: Permissible position deviation in the minor axis of the working plane. Input range 0 to 99999.9999
- **Measuring log** Q281: Define whether the TNC should create a measuring log:
  0: Do not create a measuring log
  1: Create a measuring log: The TNC saves the **log file TCHPR421.TXT** as standard in the directory TNC:\.
  2: Interrupt program run and output measuring log to the TNC screen. Resume program run with NC Start.
- **PGM stop if tolerance error** Q309: Definition of whether in the event of a violation of tolerance limits the TNC is to interrupt program run and output an error message:
  0: Do not interrupt program run, do not output an error message
  1: Interrupt program run and output an error message
- **Tool for monitoring** Q330: Definition of whether the TNC is to monitor the tool (See "Tool monitoring"). Input range 0 to 32767.9, alternatively tool name with maximum of 16 characters
  0: Monitoring inactive
  >0: Tool number in the tool table TOOL.T
- **No. of measuring points (4/3)** Q423: Specify whether the TNC should measure the stud with 4 or 3 probing points:
  4: Use 4 measuring points (default setting)
  3: Use 3 measuring points
- **Type of traverse? Line=0/Arc=1** Q365: Definition of the path function with which the tool is to move between the measuring points if "traverse to clearance height" (Q301=1) is active:
  0: Move in a straight line between machining operations
  1: Move in a circular arc on the pitch circle diameter between machining operations

16.6 MEASURE HOLE OUTSIDE (Cycle 422, DIN/ISO: G422)

Cycle run

Touch Probe Cycle 422 measures the center and diameter of a circular stud. If you define the corresponding tolerance values in the cycle, the TNC makes a nominal-to-actual value comparison and saves the deviation value in system parameters.

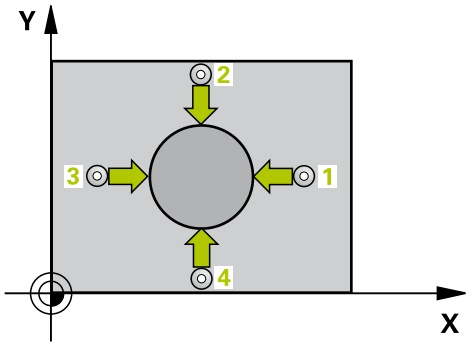

1 The TNC positions the touch probe at rapid traverse (value from **FMAX** column) following the positioning logic (See "Executing touch probe cycles", page 259) to the starting point **1**. The TNC calculates the touch points from the data in the cycle and the safety clearance from the **SET_UP** column of the touch probe table.
2 Then the touch probe moves to the entered measuring height and runs the first probing process at the probing feed rate (column **F**). The TNC derives the probing direction automatically from the programmed starting angle.
3 Then the touch probe moves in a circular arc either at measuring height or at clearance height to the next starting point **2** and probes the second touch point.
4 The TNC positions the probe to starting point **3** and then to starting point **4** to probe the third and fourth touch points.
5 Finally the TNC returns the touch probe to the clearance height and saves the actual values and the deviations in the following Q parameters:

Parameter number	Meaning
Q151	Actual value of center in reference axis
Q152	Actual value of center in minor axis
Q153	Actual value of diameter
Q161	Deviation at center of reference axis
Q162	Deviation at center of minor axis
Q163	Deviation from diameter

Please note while programming:

Before a cycle definition you must have programmed a tool call to define the touch probe axis.

The smaller the angle, the less accurately the TNC can calculate the dimensions of the stud. Minimum input value: 5°

Cycle parameters

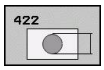

- **Center in 1st axis** Q273 (absolute): Center of the stud in the reference axis of the working plane. Input range -99999.9999 to 99999.9999
- **Center in 2nd axis** Q274 (absolute): Center of the stud in the minor axis of the working plane. Input range -99999.9999 to 99999.9999
- **Nominal diameter** Q262: Enter the diameter of the stud. Input range 0 to 99999.9999
- **Starting angle** Q325 (absolute): Angle between the reference axis of the working plane and the first touch point. Input range -360.0000 to 360.0000
- **Stepping angle** Q247 (incremental): Angle between two measuring points. The algebraic sign of the stepping angle determines the direction of rotation (negative = clockwise). If you wish to probe a circular arc instead of a complete circle, then program the stepping angle to be less than 90°. Input range -120.0000 to 120.0000
- **Measuring height in the touch probe axis** Q261 (absolute): Coordinate of the ball tip center (= touch point) in the touch probe axis in which the measurement is to be made. Input range -99999.9999 to 99999.9999
- **Set-up clearance** Q320 (incremental): Additional distance between measuring point and ball tip. Q320 is added to **SET_UP** (touch probe table). Input range 0 to 99999.9999
- **Clearance height** Q260 (absolute): Coordinate in the touch probe axis at which no collision between touch probe and workpiece (fixtures) can occur. Input range -99999.9999 to 99999.9999
- **Traversing to clearance height** Q301: definition of how the touch probe is to move between the measuring points:
  0: Move at measuring height between measuring points
  1: Move at clearance height between measuring points
- **Maximum limit of size for stud** Q277: Maximum permissible diameter for the stud. Input range 0 to 99999.9999
- **Minimum limit of size for the stud** Q278: Minimum permissible diameter for the stud. Input range 0 to 99999.9999
- **Tolerance for center 1st axis** Q279: Permissible position deviation in the reference axis of the working plane. Input range 0 to 99999.9999

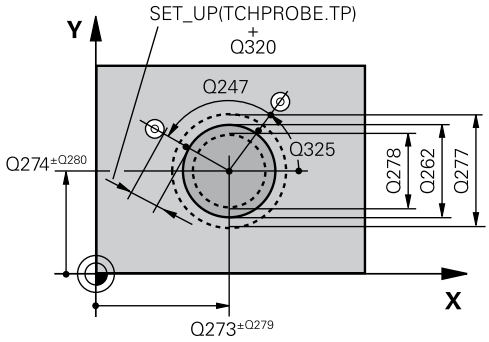

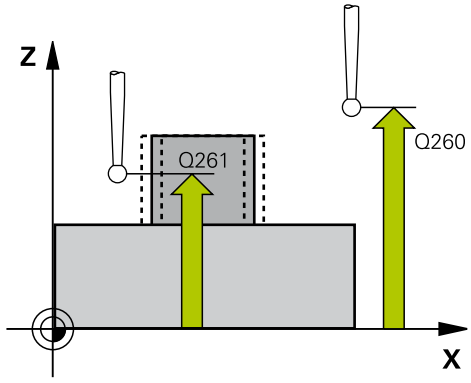

NC blocks

5 TCH PROBE 422 MEAS. CIRCLE OUTSIDE	
Q273=+50	;CENTER IN 1ST AXIS
Q274=+50	;CENTER IN 2ND AXIS
Q262=75	;NOMINAL DIAMETER
Q325=+90	;STARTING ANGLE
Q247=+30	;STEPPING ANGLE
Q261=-5	;MEASURING HEIGHT
Q320=0	;SET-UP CLEARANCE
Q260=+10	;CLEARANCE HEIGHT
Q301=0	;MOVE TO CLEARANCE
Q275=35.15	;MAXIMUM DIMENSION
Q276=34.9	;MINIMUM DIMENSION
Q279=0.05	;TOLERANCE 1ST CENTER
Q280=0.05	;TOLERANCE 2ND CENTER
Q281=1	;MEASURING LOG
Q309=0	;PGM STOP IF ERROR
Q330=0	;TOOL
Q423=4	;NO. OF PROBE POINTS
Q365=1	;TYPE OF TRAVERSE

- **Tolerance for center 2nd axis** Q280: Permissible position deviation in the minor axis of the working plane. Input range 0 to 99999.9999
- **Measuring log** Q281: Define whether the TNC should create a measuring log:
  0: Do not create a measuring log
  1: Create a measuring log: The TNC saves the **log file TCHPR422.TXT** as standard in the directory TNC:\.
  2: Interrupt program run and output measuring log to the TNC screen. Resume program run with NC Start.
- **PGM stop if tolerance error** Q309: Definition of whether in the event of a violation of tolerance limits the TNC is to interrupt program run and output an error message:
  0: Do not interrupt program run, do not output an error message
  1: Interrupt program run and output an error message
- **Tool for monitoring** Q330: Definition of whether the TNC is to monitor the tool (See "Tool monitoring", page 334). Input range 0 to 32767.9, alternatively tool name with maximum of 16 characters
  0: Monitoring inactive
  >0: Tool number in the tool table TOOL.T
- **No. of measuring points (4/3)** Q423: Specify whether the TNC should measure the stud with 4 or 3 probing points:
  4: Use 4 measuring points (default setting)
  3: Use 3 measuring points
- **Type of traverse? Line=0/Arc=1** Q365: Definition of the path function with which the tool is to move between the measuring points if "traverse to clearance height" (Q301=1) is active:
  0: Move in a straight line between machining operations
  1: Move in a circular arc on the pitch circle diameter between machining operations

16.7 MEASURE RECTANGLE INSIDE (Cycle 423, DIN/ISO: G423)

Cycle run

Touch Probe Cycle 423 finds the center, length and width of a rectangular pocket. If you define the corresponding tolerance values in the cycle, the TNC makes a nominal-to-actual value comparison and saves the deviation value in system parameters.

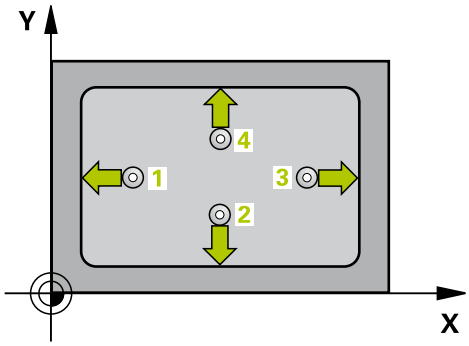

1 The TNC positions the touch probe at rapid traverse (value from **FMAX** column) following the positioning logic (See "Executing touch probe cycles", page 259) to the starting point **1**. The TNC calculates the touch points from the data in the cycle and the safety clearance from the **SET_UP** column of the touch probe table.
2 Then the touch probe moves to the entered measuring height and runs the first probing process at the probing feed rate (column **F**).
3 Then the touch probe moves either paraxially at measuring height or at clearance height to the next starting point **2** and probes the second touch point.
4 The TNC positions the probe to starting point **3** and then to starting point **4** to probe the third and fourth touch points.
5 Finally the TNC returns the touch probe to the clearance height and saves the actual values and the deviations in the following Q parameters:

Parameter number	Meaning
Q151	Actual value of center in reference axis
Q152	Actual value of center in minor axis
Q154	Actual value of length in the reference axis
Q155	Actual value of length in the minor axis
Q161	Deviation at center of reference axis
Q162	Deviation at center of minor axis
Q164	Deviation of side length in reference axis
Q165	Deviation of side length in minor axis

Please note while programming:

Before a cycle definition you must have programmed a tool call to define the touch probe axis.

If the dimensions of the pocket and the safety clearance do not permit pre-positioning in the proximity of the touch points, the TNC always starts probing from the center of the pocket. In this case the touch probe does not return to the clearance height between the four measuring points.

Cycle parameters

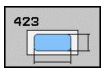

- **Center in 1st axis** Q273 (absolute): Center of the pocket in the reference axis of the working plane. Input range -99999.9999 to 99999.9999
- **Center in 2nd axis** Q274 (absolute): Center of the pocket in the minor axis of the working plane. Input range -99999.9999 to 99999.9999
- **1st side length** Q282: Pocket length, parallel to the reference axis of the working plane. Input range 0 to 99999.9999
- **2nd side length** Q283: Pocket length, parallel to the minor axis of the working plane. Input range 0 to 99999.9999
- **Measuring height in the touch probe axis** Q261 (absolute): Coordinate of the ball tip center (= touch point) in the touch probe axis in which the measurement is to be made. Input range -99999.9999 to 99999.9999
- **Set-up clearance** Q320 (incremental): Additional distance between measuring point and ball tip. Q320 is added to **SET_UP** (touch probe table). Input range 0 to 99999.9999

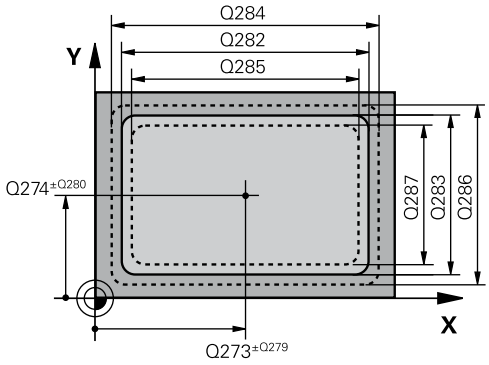

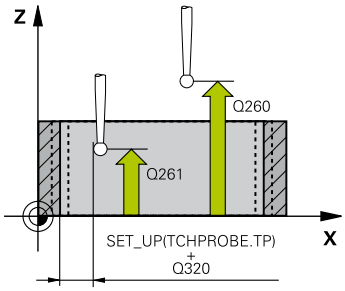

- **Clearance height** Q260 (absolute): Coordinate in the touch probe axis at which no collision between touch probe and workpiece (fixtures) can occur. Input range -99999.9999 to 99999.9999
- **Traversing to clearance height** Q301: definition of how the touch probe is to move between the measuring points:
  0: Move at measuring height between measuring points
  1: Move at clearance height between measuring points
- **Max. size limit 1st side length** Q284: Maximum permissible length of the pocket. Input range 0 to 99999.9999
- **Min. size limit 1st side length** Q285: Minimum permissible length of the pocket. Input range 0 to 99999.9999
- **Max. size limit 2nd side length** Q286: Maximum permissible width of the pocket. Input range 0 to 99999.9999
- **Min. size limit 2nd side length** Q287: Minimum permissible width of the pocket. Input range 0 to 99999.9999
- **Tolerance for center 1st axis** Q279: Permissible position deviation in the reference axis of the working plane. Input range 0 to 99999.9999
- **Tolerance for center 2nd axis** Q280: Permissible position deviation in the minor axis of the working plane. Input range 0 to 99999.9999

NC blocks

```
5 TCH PROBE 423 MEAS. RECTAN. INSIDE
    Q273=+50   ;CENTER IN 1ST AXIS
    Q274=+50   ;CENTER IN 2ND AXIS
    Q282=80    ;FIRST SIDE LENGTH
    Q283=60    ;2ND SIDE LENGTH
    Q261=-5    ;MEASURING HEIGHT
    Q320=0     ;SET-UP CLEARANCE
    Q260=+10   ;CLEARANCE HEIGHT
    Q301=1     ;MOVE TO CLEARANCE
    Q284=0     ;MAX. LIMIT 1ST SIDE
    Q285=0     ;MIN. LIMIT 1ST SIDE
    Q286=0     ;MAX. LIMIT 2ND SIDE
    Q287=0     ;MIN. LIMIT 2ND SIDE
    Q279=0     ;TOLERANCE 1ST CENTER
    Q280=0     ;TOLERANCE 2ND CENTER
    Q281=1     ;MEASURING LOG
    Q309=0     ;PGM STOP IF ERROR
    Q330=0     ;TOOL
```

- **Measuring log** Q281: Define whether the TNC should create a measuring log:
  0: Do not create a measuring log
  1: Create a measuring log: The TNC saves the **log file TCHPR423.TXT** as standard in the directory TNC:\.
  2: Interrupt program run and output measuring log to the TNC screen. Resume program run with NC Start.
- **PGM stop if tolerance error** Q309: Definition of whether in the event of a violation of tolerance limits the TNC is to interrupt program run and output an error message:
  0: Do not interrupt program run, do not output an error message
  1: Interrupt program run and output an error message
- **Tool for monitoring** Q330: Definition of whether the TNC is to monitor the tool (See "Tool monitoring", page 334). Input range 0 to 32767.9, alternatively tool name with maximum of 16 characters
  0: Monitoring inactive
  >0: Tool number in the tool table TOOL.T

16.8 MEASURE RECTANGLE OUTSIDE (Cycle 424, DIN/ISO: G424)

Cycle run

Touch Probe Cycle 424 finds the center, length and width of a rectangular stud. If you define the corresponding tolerance values in the cycle, the TNC makes a nominal-to-actual value comparison and saves the deviation value in system parameters.

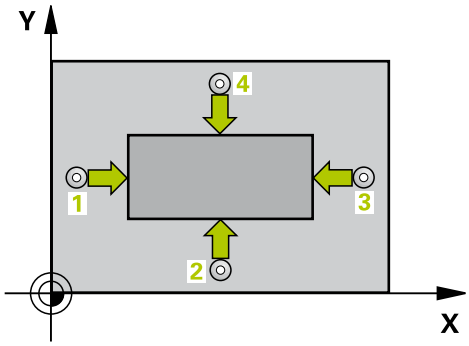

1 The TNC positions the touch probe at rapid traverse (value from **FMAX** column) following the positioning logic (See "Executing touch probe cycles", page 259) to the starting point **1**. The TNC calculates the touch points from the data in the cycle and the safety clearance from the **SET_UP** column of the touch probe table.
2 Then the touch probe moves to the entered measuring height and runs the first probing process at the probing feed rate (column **F**).
3 Then the touch probe moves either paraxially at measuring height or at clearance height to the next starting point **2** and probes the second touch point.
4 The TNC positions the probe to starting point **3** and then to starting point **4** to probe the third and fourth touch points.
5 Finally the TNC returns the touch probe to the clearance height and saves the actual values and the deviations in the following Q parameters:

Parameter number	Meaning
Q151	Actual value of center in reference axis
Q152	Actual value of center in minor axis
Q154	Actual value of length in the reference axis
Q155	Actual value of length in the minor axis
Q161	Deviation at center of reference axis
Q162	Deviation at center of minor axis
Q164	Deviation of side length in reference axis
Q165	Deviation of side length in minor axis

Please note while programming:

Before a cycle definition you must have programmed a tool call to define the touch probe axis.

Cycle parameters

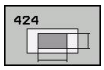

- **Center in 1st axis** Q273 (absolute): Center of the stud in the reference axis of the working plane. Input range -99999.9999 to 99999.9999
- **Center in 2nd axis** Q274 (absolute): Center of the stud in the minor axis of the working plane. Input range -99999.9999 to 99999.9999
- **1st side length** Q282: Stud length, parallel to the reference axis of the working plane. Input range 0 to 99999.9999
- **2nd side length** Q283: Stud length, parallel to the minor axis of the working plane. Input range 0 to 99999.9999
- **Measuring height in the touch probe axis** Q261 (absolute): Coordinate of the ball tip center (= touch point) in the touch probe axis in which the measurement is to be made. Input range -99999.9999 to 99999.9999
- **Set-up clearance** Q320 (incremental): Additional distance between measuring point and ball tip. Q320 is added to **SET_UP** (touch probe table). Input range 0 to 99999.9999
- **Clearance height** Q260 (absolute): Coordinate in the touch probe axis at which no collision between touch probe and workpiece (fixtures) can occur. Input range -99999.9999 to 99999.9999
- **Traversing to clearance height** Q301: definition of how the touch probe is to move between the measuring points:
  0: Move at measuring height between measuring points
  1: Move at clearance height between measuring points
- **Max. size limit 1st side length** Q284: Maximum permissible length of the stud. Input range 0 to 99999.9999
- **Min. size limit 1st side length** Q285: Minimum permissible length of the stud. Input range 0 to 99999.9999
- **Max. size limit 2nd side length** Q286: Maximum permissible width of the stud. Input range 0 to 99999.9999
- **Min. size limit 2nd side length** Q287: Minimum permissible width of the stud. Input range 0 to 99999.9999
- **Tolerance for center 1st axis** Q279: Permissible position deviation in the reference axis of the working plane. Input range 0 to 99999.9999

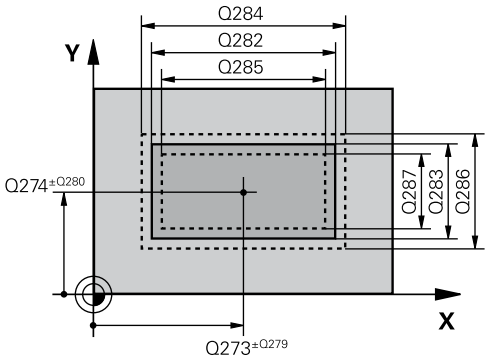

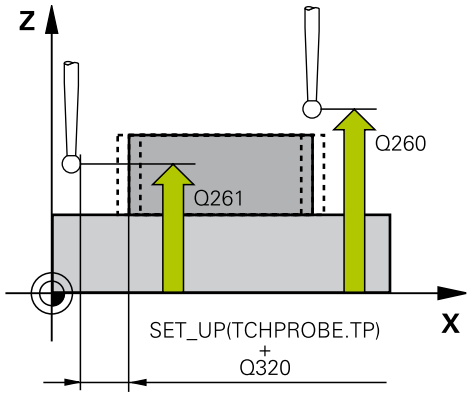

NC blocks

5 TCH PROBE 424 MEAS. RECTAN. OUTS.	
Q273=+50	;CENTER IN 1ST AXIS
Q274=+50	;CENTER IN 2ND AXIS
Q282=75	;FIRST SIDE LENGTH
Q283=35	;2ND SIDE LENGTH
Q261=-5	;MEASURING HEIGHT
Q320=0	;SET-UP CLEARANCE
Q260=+20	;CLEARANCE HEIGHT
Q301=0	;MOVE TO CLEARANCE
Q284=75.1	;MAX. LIMIT 1ST SIDE
Q285=74.9	;MIN. LIMIT 1ST SIDE
Q286=35	;MAX. LIMIT 2ND SIDE
Q287=34.95	;MIN. LIMIT 2ND SIDE
Q279=0.1	;TOLERANCE 1ST CENTER
Q280=0.1	;TOLERANCE 2ND CENTER
Q281=1	;MEASURING LOG
Q309=0	;PGM STOP IF ERROR
Q330=0	;TOOL

- **Tolerance for center 2nd axis** Q280: Permissible position deviation in the minor axis of the working plane. Input range 0 to 99999.9999
- **Measuring log** Q281: Define whether the TNC should create a measuring log:
  0: Do not create a measuring log
  1: Create a measuring log: The TNC saves the **log file TCHPR424.TXT** as standard in the directory TNC:\.
  2: Interrupt program run and output measuring log to the TNC screen. Resume program run with NC Start.
- **PGM stop if tolerance error** Q309: Definition of whether in the event of a violation of tolerance limits the TNC is to interrupt program run and output an error message:
  0: Do not interrupt program run, do not output an error message
  1: Interrupt program run and output an error message
- **Tool for monitoring** Q330: Definition of whether the TNC is to monitor the tool (See "Tool monitoring", page 334). Input range 0 to 32767.9, alternatively tool name with maximum of 16 characters
  0: Monitoring inactive
  >0: Tool number in the tool table TOOL.T

16.9 MEASURE INSIDE WIDTH (Cycle 425, DIN/ISO: G425)

Cycle run

Touch Probe Cycle 425 measures the position and width of a slot (or pocket). If you define the corresponding tolerance values in the cycle, the TNC makes a nominal-to-actual value comparison and saves the deviation value in a system parameter.

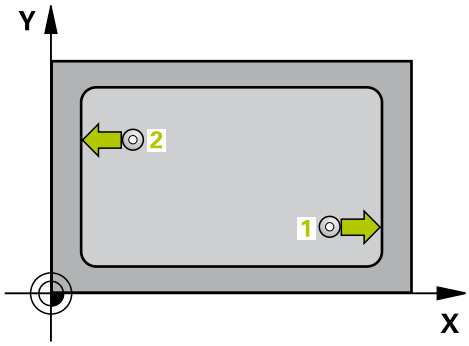

1 The TNC positions the touch probe at rapid traverse (value from **FMAX** column) following the positioning logic (See "Executing touch probe cycles", page 259) to the starting point **1**. The TNC calculates the touch points from the data in the cycle and the safety clearance from the **SET_UP** column of the touch probe table.
2 Then the touch probe moves to the entered measuring height and runs the first probing process at the probing feed rate (column **F**). 1. The first probing is always in the positive direction of the programmed axis.
3 If you enter an offset for the second measurement, the TNC then moves the touch probe (if required, at clearance height) to the next starting point **2** and probes the second touch point. If the nominal length is large, the TNC moves the touch probe to the second touch point at rapid traverse. If you do not enter an offset, the TNC measures the width in the exact opposite direction.
4 Finally the TNC returns the touch probe to the clearance height and saves the actual values and the deviation value in the following Q parameters:

Parameter number	Meaning
Q156	Actual value of measured length
Q157	Actual value of the centerline
Q166	Deviation of the measured length

Please note while programming:

Before a cycle definition you must have programmed a tool call to define the touch probe axis.

Cycle parameters

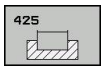

- **Starting point in 1st axis** Q328 (absolute): Starting point for probing in the reference axis of the working plane. Input range -99999.9999 to 99999.9999
- **Starting point in 2nd axis** Q329 (absolute): Starting point for probing in the minor axis of the working plane. Input range -99999.9999 to 99999.9999
- **Offset for 2nd measurement** Q310 (incremental): Distance by which the touch probe is displaced before the second measurement. If you enter 0, the TNC does not offset the touch probe. Input range -99999.9999 to 99999.9999
- **Measuring axis** Q272: Axis in the working plane in which the measurement is to be made:
  1: Principal axis = measuring axis
  2: Secondary axis = measuring axis
- **Measuring height in the touch probe axis** Q261 (absolute): Coordinate of the ball tip center (= touch point) in the touch probe axis in which the measurement is to be made. Input range -99999.9999 to 99999.9999
- **Clearance height** Q260 (absolute): Coordinate in the touch probe axis at which no collision between touch probe and workpiece (fixtures) can occur. Input range -99999.9999 to 99999.9999
- **Nominal length** Q311: Nominal value of the length to be measured. Input range 0 to 99999.9999
- **Maximum dimension** Q288: Maximum permissible length. Input range 0 to 99999.9999
- **Minimum dimension** Q289: Minimum permissible length. Input range 0 to 99999.9999
- **Measuring log** Q281: Define whether the TNC should create a measuring log:
  0: Do not create a measuring log
  1: Create a measuring log: The TNC saves the **log file TCHPR425.TXT** as standard in the directory TNC:\.
  2: Interrupt program run and output measuring log to the TNC screen. Resume program run with NC Start.
- **PGM stop if tolerance error** Q309: Definition of whether in the event of a violation of tolerance limits the TNC is to interrupt program run and output an error message:
  0: Do not interrupt program run, do not output an error message
  1: Interrupt program run and output an error message

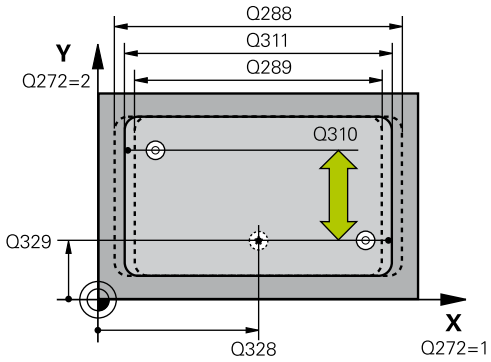

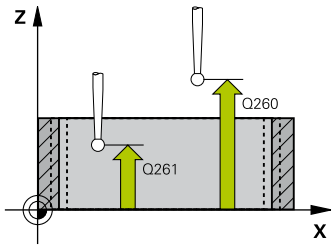

NC blocks

5 TCH PROBE 425 MEASURE INSIDE WIDTH	
Q328=+75	;STARTNG PNT 1ST AXIS
Q329=-12.5	;STARTNG PNT 2ND AXIS
Q310=+0	;OFFS. 2ND MEASUREMNT
Q272=1	;MEASURING AXIS
Q261=-5	;MEASURING HEIGHT
Q260=+10	;CLEARANCE HEIGHT
Q311=25	;NOMINAL LENGTH
Q288=25.05	;MAXIMUM DIMENSION
Q289=25	;MINIMUM DIMENSION
Q281=1	;MEASURING LOG
Q309=0	;PGM STOP IF ERROR
Q330=0	;TOOL
Q320=0	;SET-UP CLEARANCE
Q301=0	;MOVE TO CLEARANCE

- **Tool for monitoring** Q330: Definition of whether the TNC is to monitor the tool (See "Tool monitoring"). Input range 0 to 32767.9, alternatively tool name with maximum of 16 characters
  0: Monitoring inactive
  >0: Tool number in the tool table TOOL.T
- **Set-up clearance** Q320 (incremental): Additional distance between measuring point and ball tip. Q320 is added to **SET_UP** (touch probe table), and is only effective when the datum is probed in the touch probe axis. Input range 0 to 99999.9999
- **Traversing to clearance height** Q301: definition of how the touch probe is to move between the measuring points:
  0: Move at measuring height between measuring points
  1: Move at clearance height between measuring points

16.10 MEASURE RIDGE WIDTH (Cycle 426, DIN/ISO: G426)

Cycle run

Touch Probe Cycle 426 measures the position and width of a ridge. If you define the corresponding tolerance values in the cycle, the TNC makes a nominal-to-actual value comparison and saves the deviation value in system parameters.

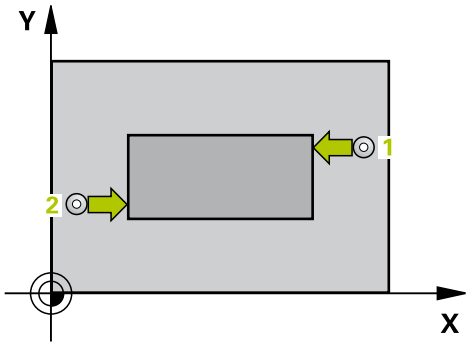

1 The TNC positions the touch probe at rapid traverse (value from **FMAX** column) following the positioning logic (See "Executing touch probe cycles", page 259) to the starting point **1**. The TNC calculates the touch points from the data in the cycle and the safety clearance from the **SET_UP** column of the touch probe table.
2 Then the touch probe moves to the entered measuring height and runs the first probing process at the probing feed rate (column **F**). 1. The first probing is always in the negative direction of the programmed axis.
3 Then the touch probe moves at clearance height to the next starting position and probes the second touch point.
4 Finally the TNC returns the touch probe to the clearance height and saves the actual values and the deviation value in the following Q parameters:

Parameter number	Meaning
Q156	Actual value of measured length
Q157	Actual value of the centerline
Q166	Deviation of the measured length

Please note while programming:

Before a cycle definition you must have programmed a tool call to define the touch probe axis.

Cycle parameters

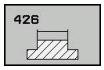

- **1st meas. point 1st axis** Q263 (absolute): Coordinate of the first touch point in the reference axis of the working plane. Input range -99999.9999 to 99999.9999
- **1st meas. point 2nd axis** Q264 (absolute): Coordinate of the first touch point in the minor axis of the working plane. Input range -99999.9999 to 99999.9999
- **2nd meas. point 1st axis** Q265 (absolute): Coordinate of the second touch point in the reference axis of the working plane. Input range -99999.9999 to 99999.9999

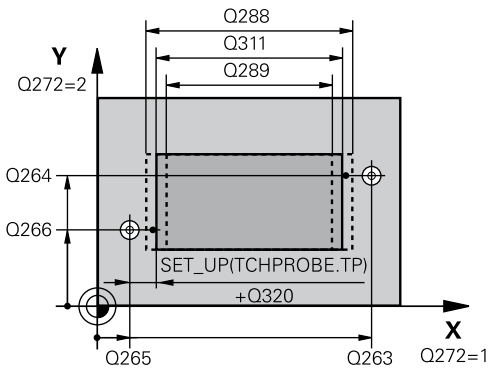

- **2nd meas. point 2nd axis** Q266 (absolute): Coordinate of the second touch point in the minor axis of the working plane. Input range -99999.9999 to 99999.9999
- **Measuring axis** Q272: Axis in the working plane in which the measurement is to be made:
  1: Principal axis = measuring axis
  2: Secondary axis = measuring axis
- **Measuring height in the touch probe axis** Q261 (absolute): Coordinate of the ball tip center (= touch point) in the touch probe axis in which the measurement is to be made. Input range -99999.9999 to 99999.9999
- **Set-up clearance** Q320 (incremental): Additional distance between measuring point and ball tip. Q320 is added to **SET_UP** (touch probe table). Input range 0 to 99999.9999
- **Clearance height** Q260 (absolute): Coordinate in the touch probe axis at which no collision between touch probe and workpiece (fixtures) can occur. Input range -99999.9999 to 99999.9999
- **Nominal length** Q311: Nominal value of the length to be measured. Input range 0 to 99999.9999
- **Maximum dimension** Q288: Maximum permissible length. Input range 0 to 99999.9999
- **Minimum dimension** Q289: Minimum permissible length. Input range 0 to 99999.9999
- **Measuring log** Q281: Define whether the TNC should create a measuring log:
  0: Do not create a measuring log
  1: Create a measuring log: The TNC saves the **log file TCHPR426.TXT** as standard in the directory TNC:\.
  2: Interrupt program run and output measuring log to the TNC screen. Resume program run with NC Start.
- **PGM stop if tolerance error** Q309: Definition of whether in the event of a violation of tolerance limits the TNC is to interrupt program run and output an error message:
  0: Do not interrupt program run, do not output an error message
  1: Interrupt program run and output an error message
- **Tool for monitoring** Q330: Definition of whether the TNC is to monitor the tool (See "Tool monitoring", page 334). Input range 0 to 32767.9, alternatively tool name with maximum of 16 characters
  0: Monitoring inactive
  >0: Tool number in the tool table TOOL.T

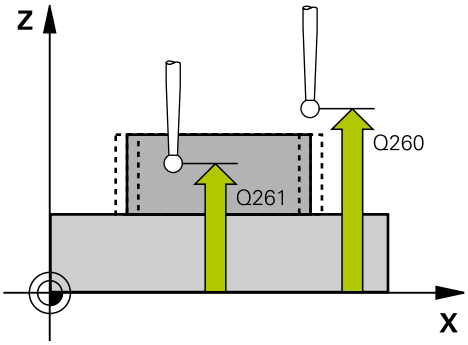

NC blocks

```
5 TCH PROBE 426 MEASURE RIDGE WIDTH
    Q263=+50   ;1ST POINT 1ST AXIS
    Q264=+25   ;1ST POINT 2ND AXIS
    Q265=+50   ;2ND POINT 1ST AXIS
    Q266=+85   ;2ND POINT 2ND AXIS
    Q272=2     ;MEASURING AXIS
    Q261=-5    ;MEASURING HEIGHT
    Q320=0     ;SET-UP CLEARANCE
    Q260=+20   ;CLEARANCE HEIGHT
    Q311=45    ;NOMINAL LENGTH
    Q288=45    ;MAXIMUM DIMENSION
    Q289=44.95;MINIMUM DIMENSION
    Q281=1     ;MEASURING LOG
    Q309=0     ;PGM STOP IF ERROR
    Q330=0     ;TOOL
```

16.11 MEASURE COORDINATE (Cycle 427, DIN/ISO: G427)

Cycle run

Touch Probe Cycle 427 finds a coordinate in a selectable axis and saves the value in a system parameter. If you define the corresponding tolerance values in the cycle, the TNC makes a nominal-to-actual value comparison and saves the deviation value in system parameters.

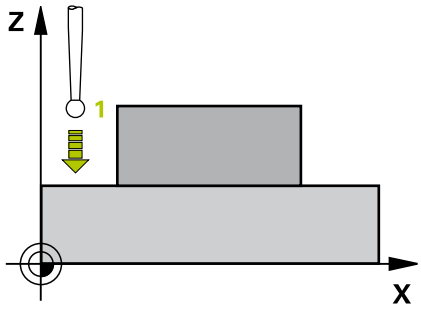

1 The TNC positions the touch probe at rapid traverse (value from **FMAX** column) following the positioning logic (See "Executing touch probe cycles", page 259) to the starting point 1. The TNC offsets the touch probe by the safety clearance in the direction opposite to the defined traverse direction.
2 Then the TNC positions the touch probe to the entered touch point 1 in the working plane and measures the actual value in the selected axis.
3 Finally the TNC returns the touch probe to the clearance height and saves the measured coordinate in the following Q parameter.

Parameter number	Meaning
Q160	Measured coordinate

Please note while programming:

Before a cycle definition you must have programmed a tool call to define the touch probe axis.

Cycle parameters

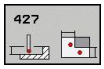

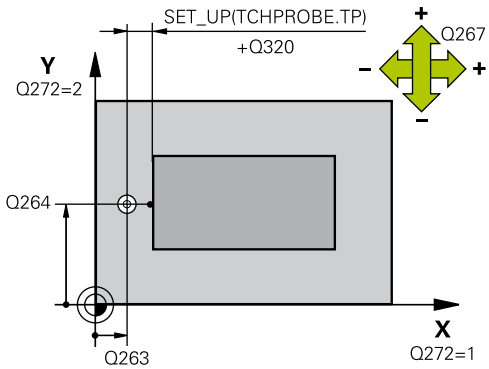

- **1st meas. point 1st axis** Q263 (absolute): Coordinate of the first touch point in the reference axis of the working plane. Input range -99999.9999 to 99999.9999
- **1st meas. point 2nd axis** Q264 (absolute): Coordinate of the first touch point in the minor axis of the working plane. Input range -99999.9999 to 99999.9999
- **Measuring height in the touch probe axis** Q261 (absolute): Coordinate of the ball tip center (= touch point) in the touch probe axis in which the measurement is to be made. Input range -99999.9999 to 99999.9999
- **Set-up clearance** Q320 (incremental): Additional distance between measuring point and ball tip. Q320 is added to **SET_UP** (touch probe table). Input range 0 to 99999.9999

- **Measuring axis (1..3: 1=principal axis)** Q272: Axis in which the measurement is to be made:
  1: Principal axis = measuring axis
  2: Secondary axis = measuring axis
  3: Touch probe axis = measuring axis
- **Traverse direction 1** Q267: Direction in which the probe is to approach the workpiece:
  -1: Negative Traverse direction
  +1: Positive traverse direction
- **Clearance height** Q260 (absolute): Coordinate in the touch probe axis at which no collision between touch probe and workpiece (fixtures) can occur. Input range -99999.9999 to 99999.9999
- **Measuring log** Q281: Define whether the TNC should create a measuring log:
  0: Do not create a measuring log
  1: Create a measuring log: The TNC saves the **log file TCHPR427.TXT** as standard in the directory TNC:\.
  2: Interrupt program run and output measuring log to the TNC screen. Resume program run with NC Start.
- **Maximum limit of size** Q288: Maximum permissible measured value. Input range 0 to 99999.9999
- **Minimum limit of size** Q289: Minimum permissible measured value. Input range 0 to 99999.9999
- **PGM stop if tolerance error** Q309: Definition of whether in the event of a violation of tolerance limits the TNC is to interrupt program run and output an error message:
  0: Do not interrupt program run, do not output an error message
  1: Interrupt program run and output an error message
- **Tool for monitoring** Q330: Definition of whether the TNC is to monitor the tool (See "Tool monitoring", page 334). Input range 0 to 32767.9, alternatively tool name with maximum of 16 characters
  0: Monitoring inactive
  >0: Tool number in the tool table TOOL.T

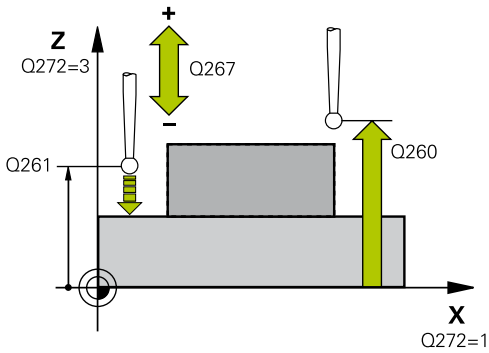

NC blocks

```
5 TCH PROBE 427 MEASURE COORDINATE
    Q263=+35   ;1ST POINT 1ST AXIS
    Q264=+45   ;1ST POINT 2ND AXIS
    Q261=+5    ;MEASURING HEIGHT
    Q320=0     ;SET-UP CLEARANCE
    Q272=3     ;MEASURING AXIS
    Q267=-1    ;TRAVERSE DIRECTION
    Q260=+20   ;CLEARANCE HEIGHT
    Q281=1     ;MEASURING LOG
    Q288=5.1   ;MAXIMUM DIMENSION
    Q289=4.95  ;MINIMUM DIMENSION
    Q309=0     ;PGM STOP IF ERROR
    Q330=0     ;TOOL
```

16.12 MEASURE BOLT HOLE CIRCLE (Cycle 430, DIN/ISO: G430)

Cycle run

Touch Probe Cycle 430 finds the center and diameter of a bolt hole circle by probing three holes. If you define the corresponding tolerance values in the cycle, the TNC makes a nominal-to-actual value comparison and saves the deviation value in system parameters.

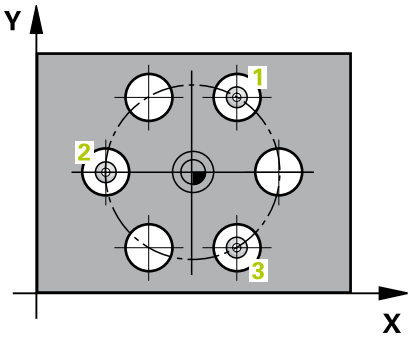

1 Following the positioning logic (See "Executing touch probe cycles", page 259), the control positions the touch probe at rapid traverse (value from column **FMAX**) to the center of the first hole **1**.
2 Then the probe moves to the entered measuring height and probes four points to find the first hole center.
3 The touch probe returns to the clearance height and then to the position entered as center of the second hole **2**.
4 The TNC moves the touch probe to the entered measuring height and probes four points to find the second hole center.
5 The touch probe returns to the clearance height and then to the position entered as center of the third hole **3**.
6 The TNC moves the touch probe to the entered measuring height and probes four points to find the third hole center.
7 Finally the TNC returns the touch probe to the clearance height and saves the actual values and the deviations in the following Q parameters:

Parameter number	Meaning
Q151	Actual value of center in reference axis
Q152	Actual value of center in minor axis
Q153	Actual value of bolt hole circle diameter
Q161	Deviation at center of reference axis
Q162	Deviation at center of minor axis
Q163	Deviation of bolt hole circle diameter

Please note while programming:

Before a cycle definition you must have programmed a tool call to define the touch probe axis.

Cycle 430 only monitors for tool breakage; there is no automatic tool compensation.

Cycle parameters

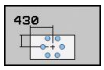

- **Center in 1st axis** Q273 (absolute): Bolt hole circle center (nominal value) in the reference axis of the working plane. Input range -99999.9999 to 99999.9999
- **Center in 2nd axis** Q274 (absolute): Bolt hole circle center (nominal value) in the minor axis of the working plane. Input range -99999.9999 to 99999.9999
- **Nominal diameter** Q262: Enter the bolt hole circle diameter. Input range 0 to 99999.9999
- **Angle of 1st hole** Q291 (absolute): Polar coordinate angle of the first hole center in the working plane. Input range -360.0000 to 360.0000
- **Angle of 2nd hole** Q292 (absolute): Polar coordinate angle of the second hole center in the working plane. Input range -360.0000 to 360.0000
- **Angle of 3rd hole** Q293 (absolute): Polar coordinate angle of the third hole center in the working plane. Input range -360.0000 to 360.0000
- **Measuring height in the touch probe axis** Q261 (absolute): Coordinate of the ball tip center (= touch point) in the touch probe axis in which the measurement is to be made. Input range -99999.9999 to 99999.9999
- **Clearance height** Q260 (absolute): Coordinate in the touch probe axis at which no collision between touch probe and workpiece (fixtures) can occur. Input range -99999.9999 to 99999.9999
- **Maximum limit of size** Q288: Maximum permissible diameter of bolt hole circle. Input range 0 to 99999.9999
- **Minimum limit of size** Q289: Minimum permissible diameter of bolt hole circle. Input range 0 to 99999.9999
- **Tolerance for center 1st axis** Q279: Permissible position deviation in the reference axis of the working plane. Input range 0 to 99999.9999
- **Tolerance for center 2nd axis** Q280: Permissible position deviation in the minor axis of the working plane. Input range 0 to 99999.9999

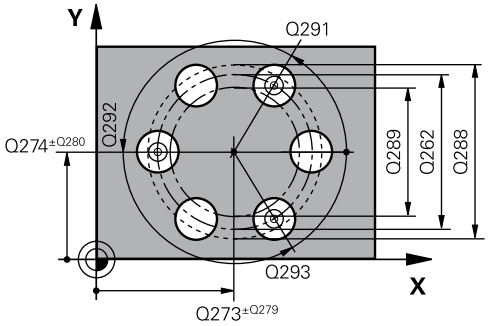

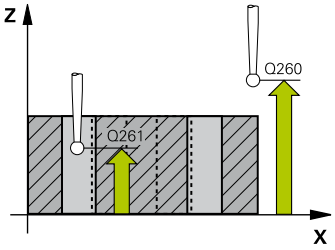

NC blocks

5 TCH PROBE 430 MEAS. BOLT HOLE CIRC	
Q273=+50	;CENTER IN 1ST AXIS
Q274=+50	;CENTER IN 2ND AXIS
Q262=80	;NOMINAL DIAMETER
Q291=+0	;ANGLE OF 1ST HOLE
Q292=+90	;ANGLE OF 2ND HOLE
Q293=+180	;ANGLE OF 3RD HOLE
Q261=-5	;MEASURING HEIGHT
Q260=+10	;CLEARANCE HEIGHT
Q288=80.1	;MAXIMUM DIMENSION
Q289=79.9	;MINIMUM DIMENSION
Q279=0.15	;TOLERANCE 1ST CENTER
Q280=0.15	;TOLERANCE 2ND CENTER
Q281=1	;MEASURING LOG
Q309=0	;PGM STOP IF ERROR
Q330=0	;TOOL

- **Measuring log** Q281: Define whether the TNC should create a measuring log:
  0: Do not create a measuring log
  1: Create a measuring log: The TNC saves the **log file TCHPR430.TXT** as standard in the directory TNC:\.
  2: Interrupt program run and output measuring log to the TNC screen. Resume program run with NC Start.
- **PGM stop if tolerance error** Q309: Definition of whether in the event of a violation of tolerance limits the TNC is to interrupt program run and output an error message:
  0: Do not interrupt program run, do not output an error message
  1: Interrupt program run and output an error message
- **Tool number for monitoring** Q330: Definition of whether the TNC is to monitor for tool breakage (See "Tool monitoring", page 334): Input range 0 to 32767.9, alternatively tool name with maximum of 16 characters
  0: Monitoring inactive
  >0: Tool number in the tool table TOOL.T

16.13 MEASURE PLANE (Cycle 431, DIN/ISO: G431)

Cycle run

Touch Probe Cycle 431 finds the angle of a plane by measuring three points. It saves the measured values in system parameters.

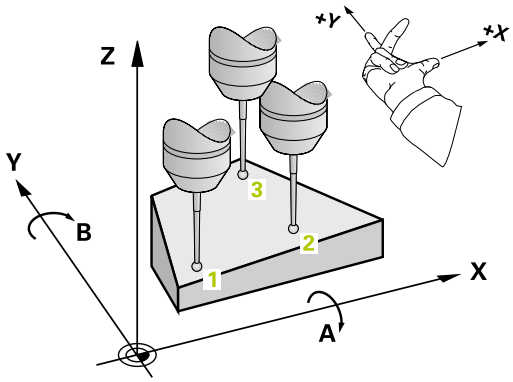

1 Following the positioning logic (See "Executing touch probe cycles", page 259), the TNC positions the touch probe at rapid traverse (value from **FMAX** column) to the programmed starting point **1** and measures the first touch point of the plane. The TNC offsets the touch probe by the safety clearance in the direction opposite to the direction of probing.
2 The touch probe returns to the clearance height and then moves in the working plane to starting point **2** and measures the actual value of the second touch point of the plane.
3 The touch probe returns to the clearance height and then moves in the working plane to starting point **3** and measures the actual value of the third touch point of the plane.
4 Finally the TNC returns the touch probe to the clearance height and saves the measured angle values in the following Q parameters:

Parameter number	Meaning
Q158	Projection angle of the A axis
Q159	Projection angle of the B axis
Q170	Spatial angle A
Q171	Spatial angle B
Q172	Spatial angle C
Q173 to Q175	Measured values in the touch probe axis (first to third measurement)

Please note while programming:

Before a cycle definition you must have programmed a tool call to define the touch probe axis.

For the TNC to be able to calculate the angular values, the three measuring points must not be positioned on one straight line.

The spatial angles that are needed for tilting the working plane are saved in parameters Q170 – Q172. With the first two measuring points you also specify the direction of the reference axis when tilting the working plane.

The third measuring point determines the direction of the tool axis. Define the third measuring point in the direction of the positive Y axis to ensure that the position of the tool axis in a clockwise coordinate system is correct.

Cycle parameters

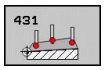

- **1st meas. point 1st axis** Q263 (absolute): Coordinate of the first touch point in the reference axis of the working plane. Input range -99999.9999 to 99999.9999
- **1st meas. point 2nd axis** Q264 (absolute): Coordinate of the first touch point in the minor axis of the working plane. Input range -99999.9999 to 99999.9999
- **1st meas. point 3rd axis** Q294 (absolute): Coordinate of the first touch point in the touch probe axis. Input range -99999.9999 to 99999.9999
- **2nd meas. point 1st axis** Q265 (absolute): Coordinate of the second touch point in the reference axis of the working plane. Input range -99999.9999 to 99999.9999
- **2nd meas. point 2nd axis** Q266 (absolute): Coordinate of the second touch point in the minor axis of the working plane. Input range -99999.9999 to 99999.9999
- **2nd meas. point 3rd axis** Q295 (absolute): Coordinate of the second touch point in the touch probe axis. Input range -99999.9999 to 99999.9999

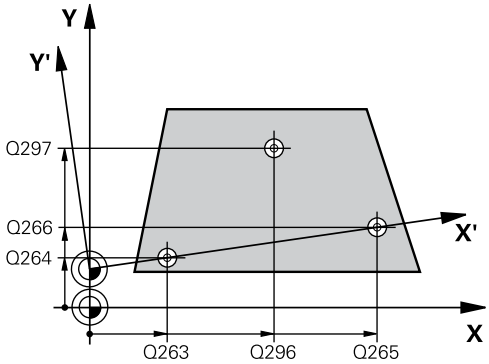

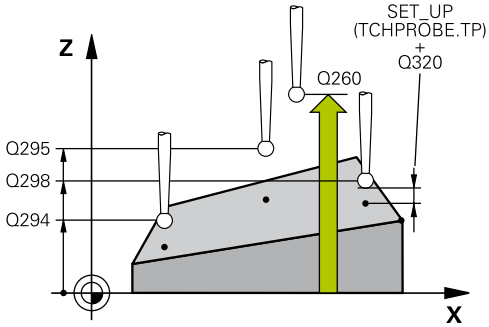

NC blocks

```
5 TCH PROBE 431 MEASURE PLANE
```

- **3rd meas. point 1st axis** Q296 (absolute): Coordinate of the third touch point in the reference axis of the working plane. Input range -99999.9999 to 99999.9999
- **3rd meas. point 2nd axis** Q297 (absolute): Coordinate of the third touch point in the minor axis of the working plane. Input range -99999.9999 to 99999.9999
- **3rd meas. point 3rd axis** Q298 (absolute): Coordinate of the third touch point in the touch probe axis. Input range -99999.9999 to 99999.9999
- **Set-up clearance** Q320 (incremental): Additional distance between measuring point and ball tip. Q320 is added to **SET_UP** (touch probe table). Input range 0 to 99999.9999
- **Clearance height** Q260 (absolute): Coordinate in the touch probe axis at which no collision between touch probe and workpiece (fixtures) can occur. Input range -99999.9999 to 99999.9999
- **Measuring log** Q281: Define whether the TNC should create a measuring log:
  0: Do not create a measuring log
  1: Create a measuring log: The TNC saves the **log file TCHPR431.TXT** as standard in the directory TNC:\.
  2: Interrupt program run and output measuring log to the TNC screen. Resume program run with NC Start.

```
Q263=+20  ;1ST POINT 1ST AXIS
Q264=+20  ;1ST POINT 2ND AXIS
Q294=-10  ;1ST POINT 3RD AXIS
Q265=+50  ;2ND POINT 1ST AXIS
Q266=+80  ;2ND POINT 2ND AXIS
Q295=+0   ;2ND POINT 3RD AXIS
Q296=+90  ;3RD POINT 1ST AXIS
Q297=+35  ;3RD POINT 2ND AXIS
Q298=+12  ;3RD POINT 3RD AXIS
Q320=0    ;SET-UP CLEARANCE
Q260=+5   ;CLEARANCE HEIGHT
Q281=1    ;MEASURING LOG
```

16.14 Programming Examples

Example: Measuring and reworking a rectangular stud

Program sequence

- Roughing with 0.5 mm finishing allowance
- Measuring
- Rectangular stud finishing in accordance with the measured values

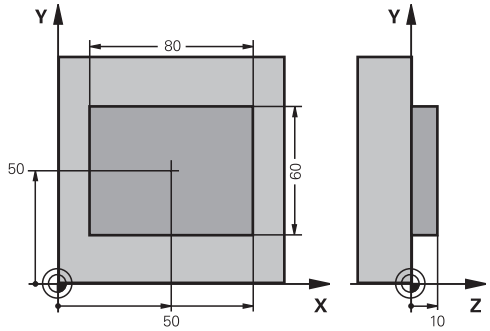

0 BEGIN PGM BEAMS MM	
1 TOOL CALL 69 Z	Tool call for roughing
2 L Z+100 R0 FMAX	Retract the tool
3 FN 0: Q1 = +81	Length of rectangle in X (roughing dimension)
4 FN 0: Q2 = +61	Length of rectangle in Y (roughing dimension)
5 CALL LBL 1	Call subprogram for machining
6 L Z+100 R0 FMAX	Retract the tool, change the tool
7 TOOL CALL 99 Z	Call the touch probe
8 TCH PROBE 424 MEAS. RECTAN. OUTS.	Measure the rough-milled rectangle
Q273=+50 ;CENTER IN 1ST AXIS	
Q274=+50 ;CENTER IN 2ND AXIS	
Q282=80 ;FIRST SIDE LENGTH	Nominal length in X (final dimension)
Q283=60 ;2ND SIDE LENGTH	Nominal length in Y (final dimension)
Q261=-5 ;MEASURING HEIGHT	
Q320=0 ;SET-UP CLEARANCE	
Q260=+30 ;CLEARANCE HEIGHT	
Q301=0 ;MOVE TO CLEARANCE	
Q284=0 ;MAX. LIMIT 1ST SIDE	Input values for tolerance checking not required
Q285=0 ;MIN. LIMIT 1ST SIDE	
Q286=0 ;MAX. LIMIT 2ND SIDE	
Q287=0 ;MIN. LIMIT 2ND SIDE	
Q279=0 ;TOLERANCE 1ST CENTER	
Q280=0 ;TOLERANCE 2ND CENTER	
Q281=0 ;MEASURING LOG	No measuring log transmission
Q309=0 ;PGM STOP IF ERROR	Do not output an error message
Q330=0 ;TOOL NO.	No tool monitoring
9 FN 2: Q1 = +Q1 - +Q164	Calculate length in X including the measured deviation
10 FN 2: Q2 = +Q2 - +Q165	Calculate length in Y including the measured deviation
11 L Z+100 R0 FMAX	Retract the touch probe, change the tool
12 TOOL CALL 1 Z S5000	Tool call for finishing
13 CALL LBL 1	Call subprogram for machining

14 L Z+100 R0 FMAX M2		Retract in the tool axis, end program
15 LBL 1		Subprogram with fixed cycle for rectangular stud
16 CYCL DEF 213 STUD FINISHING		
Q200=20	;SET-UP CLEARANCE	
Q201=-10	;DEPTH	
Q206=150	;FEED RATE FOR PLNGNG	
Q202=5	;PLUNGING DEPTH	
Q207=500	;FEED RATE FOR MILLING	
Q203=+10	;SURFACE COORDINATE	
Q204=20	;2ND SET-UP CLEARANCE	
Q216=+50	;CENTER IN 1ST AXIS	
Q217=+50	;CENTER IN 2ND AXIS	
Q218=Q1	;FIRST SIDE LENGTH	Length in X variable for roughing and finishing
Q219=q2	;SECOND SIDE LENGTH	Length in Y variable for roughing and finishing
Q220=0	;CORNER RADIUS	
Q221=0	;ALLOWANCE IN 1ST AXS	
17 CYCL CALL M3		Cycle call
18 LBL 0		End of subprogram
19 END PGM BEAMS MM		

Example: Measuring a rectangular pocket and recording the results

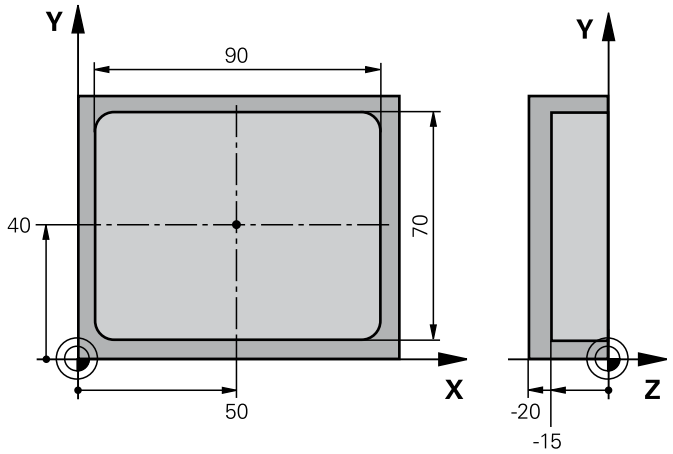

0 BEGIN PGM BSMEAS MM		
1 TOOL CALL 1 Z		Tool call for touch probe
2 L Z+100 R0 FMAX		Retract the touch probe
3 TCH PROBE 423 MEAS. RECTAN. INSIDE		
Q273=+50	;CENTER IN 1ST AXIS	
Q274=+40	;CENTER IN 2ND AXIS	
Q282=90	;FIRST SIDE LENGTH	Nominal length in X
Q283=70	;2ND SIDE LENGTH	Nominal length in Y
Q261=-5	;MEASURING HEIGHT	
Q320=0	;SET-UP CLEARANCE	
Q260=+20	;CLEARANCE HEIGHT	
Q301=0	;MOVE TO CLEARANCE	
Q284=90.15	;MAX. LIMIT 1ST SIDE	Maximum limit in X
Q285=89.95	;MIN. LIMIT 1ST SIDE	Minimum limit in X
Q286=70.1	;MAX. LIMIT 2ND SIDE	Maximum limit in Y
Q287=69.9	;MIN. LIMIT 2ND SIDE	Minimum limit in Y
Q279=0.15	;TOLERANCE 1ST CENTER	Permissible position deviation in X
Q280=0.1	;TOLERANCE 2ND CENTER	Permissible position deviation in Y
Q281=1	;MEASURING LOG	Save measuring log to a file
Q309=0	;PGM STOP IF ERROR	Do not display an error message in case of a tolerance violation
Q330=0	;TOOL NUMBER	No tool monitoring
4 L Z+100 R0 FMAX M2		Retract the tool, end program
5 END PGM BSMEAS MM		

17

Touch Probe Cycles: Special Functions

17.1 Fundamentals

Overview

When running touch probe cycles, Cycle 8 MIRROR IMAGE, Cycle 11 SCALING and Cycle 26 AXIS-SPECIFIC SCALING must not be active.

HEIDENHAIN grants a warranty for the function of the touch probe cycles only if HEIDENHAIN touch probes are used.

The TNC must be specially prepared by the machine tool builder for the use of a 3-D touch probe.

The TNC provides a cycle for the following special purpose:

Cycle	Soft key	Page
3 MEASURING Cycle for defining OEM cycles	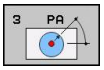	371

17.2 MEASURE (Cycle 3)

Cycle run

Touch Probe Cycle 3 measures any position on the workpiece in a selectable direction. Unlike other measuring cycles, Cycle 3 enables you to enter the measuring range **SET UP** and feed rate **F** directly. Also, the touch probe retracts by a definable value after determining the measured value **MB**.

1 The touch probe moves from the current position at the entered feed rate in the defined probing direction. The probing direction must be defined in the cycle as a polar angle.
2 After the TNC has saved the position, the touch probe stops. The TNC saves the X, Y, Z coordinates of the probe-tip center in three successive Q parameters. The TNC does not conduct any length or radius compensations. You define the number of the first result parameter in the cycle.
3 Finally, the TNC moves the touch probe back by that value against the probing direction that you defined in the parameter **MB**.

Please note while programming:

The exact behavior of Touch Probe Cycle 3 is defined by your machine tool builder or a software manufacturer who uses it within specific touch probe cycles.

The **DIST** (maximum traverse to touch point) and **F** (probing feed rate) data from the touch-probe table, which are effective in other measuring cycles, do not apply in Touch Probe Cycle 3.

Remember that the TNC always writes to four successive Q-parameters.

If the TNC was not able to determine a valid touch point, the program is run without error message. In this case the TNC assigns the value –1 to the 4th result parameter so that you can deal with the error yourself.

The TNC retracts the touch probe by no more than the retraction distance **MB** and does not pass the starting point of the measurement. This rules out any collision during retraction.

With function **FN17: SYSWRITE ID 990 NR 6** you can set whether the cycle runs through the probe input X12 or X13.

Cycle parameters

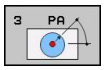

- **Parameter number for result:** Enter the number of the Q parameter to which you want the TNC to assign the first measured coordinate (X). The values Y and Z are in the immediately following Q parameters. Input range 0 to 1999
- **Probing axis**: Enter the axis in whose direction the probe is to move and confirm with the ENT key. Input range: X, Y or Z
- **Probing angle:** Angle, measured from the defined **probing axis** in which the touch probe is to move. Confirm with ENT. Input range -180.0000 to 180.0000
- **Maximum measuring range:** Enter the maximum distance from the starting point by which the touch probe is to move. Confirm with ENT. Input range -99999.9999 to 99999.9999
- **Feed rate for measurement**: Enter the measuring feed rate in mm/min. Input range 0 to 3000.000
- **Maximum retraction distance:** Traverse path in the direction opposite the probing direction, after the stylus was deflected. The TNC returns the touch probe to a point no farther than the starting point, so that there can be no collision. Input range 0 to 99999.9999
- **Reference system? (0=ACTUAL/1=REF)**: Define whether the probing direction and measuring result should reference the current coordinate system (**ACTUAL**, can be shifted or rotated) or the machine coordinate system (**REF**):
  0: Probe in the current system and save the measuring result to the **ACTUAL** system
  1: Probe in the fixed machine REF system and save the measuring result to the **REF** system.
- **Error mode (0=OFF/1=ON):** Specify whether the TNC is to issue an error message if the stylus is deflected at cycle start. If you select mode **1**, the TNC saves the value **-1** in the fourth result parameter and continues the cycle:
  0: Error message output
  1: No error message output

NC blocks

```
4 TCH PROBE 3.0 MEASURING
5 TCH PROBE 3.1 Q1
6 TCH PROBE 3.2 X ANGLE: +15
7 TCH PROBE 3.3 DIST +10 F100 MB1
REFERENCE SYSTEM:0
8 TCH PROBE 3.4 ERRORMODE1
```

17.3 Calibrating a touch trigger probe

In order to precisely specify the actual trigger point of a 3-D touch probe, you must calibrate the touch probe, otherwise the TNC cannot provide precise measuring results.

Always calibrate a touch probe in the following cases:

- Commissioning
- Stylus breakage
- Stylus exchange
- Change in the probe feed rate
- Irregularities caused, for example, when the machine heats up
- Change of active tool axis

The TNC assumes the calibration values for the active probe system directly after the calibration process. The updated tool data become effective immediately, and a new tool call is not necessary.

During calibration, the TNC finds the "effective" length of the stylus and the "effective" radius of the ball tip. To calibrate the 3-D touch probe, clamp a ring gauge or a stud of known height and known radius to the machine table.

The TNC provides calibration cycles for calibrating the length and the radius:

- Press the TOUCH PROBE soft key

- Display the calibration cycles: Press CALIBRATE TS
- Select the calibration cycle

Calibration cycles of the TNC

Soft key	Function	Page
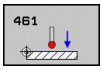	Calibrating the length	377
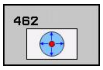	Measure the radius and the center offset using a calibration ring	378
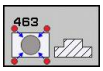	Measure the radius and the center offset using a stud or a calibration pin	380
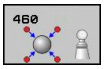	Measure the radius and the center offset using a calibration sphere	375

17.4 Displaying calibration values

The TNC saves the effective length and effective radius of the touch probe in the tool table. The TNC saves the ball-tip center offset of the touch probe in the touch-probe table in the **CAL_OF1** (principal axis) and **CAL_OF2** (secondary axis) columns. You can display the values on the screen by pressing the TOUCH PROBE TABLE soft key.

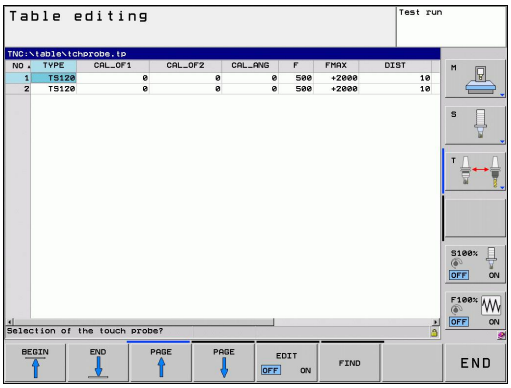

> Make sure that you have activated the correct tool number before using the touch probe, regardless of whether you wish to run the touch probe cycle in automatic mode or manual mode.

> For more information about the touch probe table, refer to the User's Manual for Cycle Programming.

17.5 CALIBRATE TS (Cycle 460, DIN/ISO: G460)

With Cycle 460 you can calibrate a triggering 3-D touch probe automatically on an exact calibration sphere. You can do radius calibration alone, or radius and length calibration.

1 Clamp the calibration sphere and check for potential collisions.
2 In the touch probe axis, position the touch probe over the calibration sphere, and in the working plane, approximately over the sphere center.
3 The first movement in the cycle is in the negative direction of the touch probe axis.
4 Then the cycle determines the exact center of the sphere in the touch probe axis.

Please note while programming:

HEIDENHAIN only gives warranty for the function of the probing cycles if HEIDENHAIN touch probes are used.

The effective length of the touch probe is always referenced to the tool datum. The machine tool builder usually defines the spindle tip as the tool datum.

Before a cycle definition you must have programmed a tool call to define the touch probe axis.

Pre-position the touch probe in the program so that it is located approximately above the center of the calibration sphere.

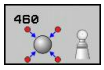

- **Exact calibration sphere radius** Q407: Enter the exact radius of the calibration sphere used. Input range 0.0001 to 99.9999
- **Set-up clearance** Q320 (incremental): Additional distance between measuring point and ball tip. Q320 is added to SET_UP in the touch probe table. Input range 0 to 99999.9999
- **Traversing to clearance height** Q301: definition of how the touch probe is to move between the measuring points:
  0: Move at measuring height between measuring points
  1: Move at clearance height between measuring points
- **Number of probe points in the plane (4/3)** Q423: Number of measuring points on the diameter. Input range 0 to 8

NC blocks

```
5 TCH PROBE 460 CALIBRATE TS
    Q407=12.5 ;SPHERE RADIUS
    Q320=0    ;SET-UP CLEARANCE
    Q301=1    ;MOVE TO CLEARANCE
    Q423=4    ;NO. OF PROBE POINTS
    Q380=+0   ;REFERENCE ANGLE
    Q433=0    ;CALIBRATE LENGTH
    Q434=-2.5 ;DATUM
```

- **Reference angle** Q380 (absolute): Reference angle (basic rotation) for measuring the measuring points in the active workpiece coordinate system. Defining a reference angle can considerably enlarge the measuring range of an axis. Input range 0 to 360.0000
- **Calibrate length** (0/1) Q433: Define whether the TNC is to calibrate the touch probe length after radius calibration, as well:
  0: Do not calibrate touch probe length
  1: Calibrate touch probe length
- **Datum for length** Q434 (absolute): Coordinate of the calibration sphere center. The definition is only required if length calibration is to be carried out. Input range -99999.9999 to 99999.9999

17.6 CALIBRATE TS LENGTH (Cycle 461, DIN/ISO: G461)

Cycle run

Before starting the calibration cycle, you must set the datum in the spindle axis so that Z=0 on the machine table; you must also preposition the touch probe over the calibration ring.

1 The TNC orients the touch probe to the angle **CAL_ANG** from the touch probe table (only if your touch probe can be oriented).
2 The TNC probes from the current position in a negative spindle axis direction at the probing feed rate (column **F** from the touch probe table).
3 The TNC then returns the touch probe at rapid traverse (column **FMAX** from the touch probe table) to the start position.

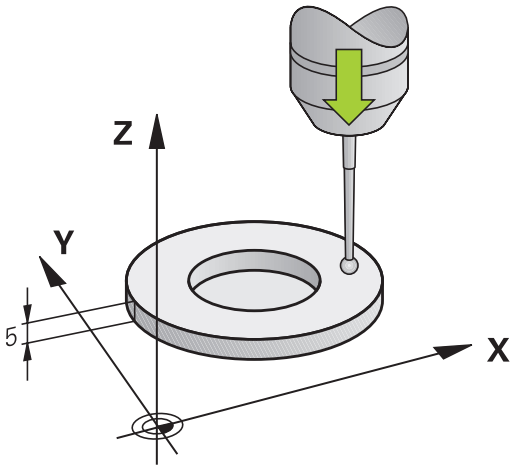

Please note while programming:

HEIDENHAIN only gives warranty for the function of the probing cycles if HEIDENHAIN touch probes are used.

The effective length of the touch probe is always referenced to the tool datum. The machine tool builder usually defines the spindle tip as the tool datum.

Before a cycle definition you must have programmed a tool call to define the touch probe axis.

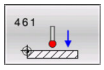

- **Datum** Q434 (absolute): Datum for the length (e.g. height of the ring gauge). Input range -99999.9999 to 99999.9999

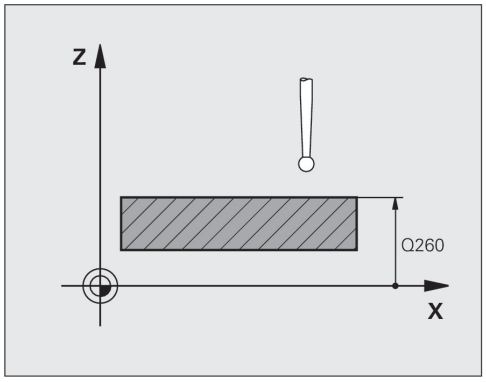

NC blocks

```
5 TCH PROBE 461 CALIBRATE TS
LENGTH
    Q434=+5    ;DATUM
```

17.7 CALIBRATE TS RADIUS INSIDE (Cycle 462, DIN/ISO: G462)

Cycle run

Before starting the calibration cycle, you need to preposition the touch probe in the center of the calibration ring and at the required measuring height.

When calibrating the ball tip radius, the TNC executes an automatic probing routine. During the first probing cycle, the TNC determines the center of the calibration ring or stud (coarse measurement) and positions the touch probe in the center. Then the ball tip radius is determined during the actual calibration process (fine measurement). If the touch probe allows probing from opposite orientations, the center offset is determined during another cycle.

The touch probe orientation determines the calibration routine:

- No orientation possible or orientation possible in only one direction: The TNC executes one approximate and one fine measurement and determines the effective ball tip radius (column R in tool.t)
- Orientation possible in two directions (e.g. HEIDENHAIN touch probes with cable): The TNC executes one approximate and one fine measurement, rotates the touch probe by 180° and then executes four more probing operations. The center offset (CAL_OF in tchprobe.tp) is determined in addition to the radius by probing from opposite orientations.
- Any orientation possible (e.g. HEIDENHAIN infrared touch probes): For probing routine, see "orientation possible in two directions."

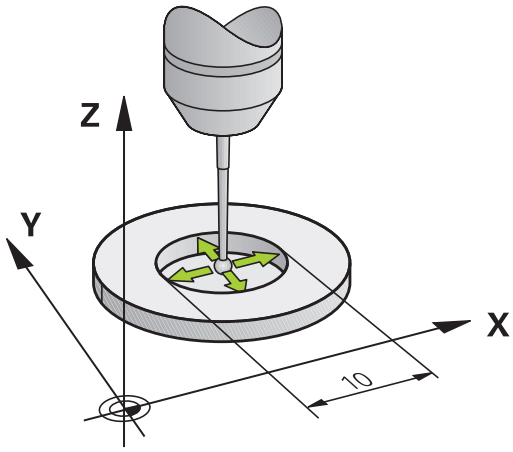

Please note while programming:

HEIDENHAIN only gives warranty for the function of the probing cycles if HEIDENHAIN touch probes are used.

Before a cycle definition you must have programmed a tool call to define the touch probe axis.

The center offset can be determined only with a suitable touch probe.

In order to be able to determine the ball-tip center misalignment, the TNC needs to be specially prepared by the machine manufacturer. The machine manual provides further information.

The characteristic of whether and how your touch probe can be oriented is already defined in HEIDENHAIN touch probes. Other touch probes are configured by the machine tool builder.

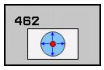

- **RING RADIUS** Q407: Diameter of the ring gauge. Input range 0 to 99.9999
- **SET-UP CLEARANCE** Q320 (incremental): Additional distance between measuring point and ball tip. Q320 is added to SET_UP (touch probe table). Input range 0 to 99999.9999
- **NO. OF PROBE POINTS** Q407 (absolute): Number of measuring points on the diameter. Input range 0 to 8
- **REFERENCE ANGLE** Q380 (absolute): Angle between the reference axis of the working plane and the first touch point. Input range 0 to 360.0000

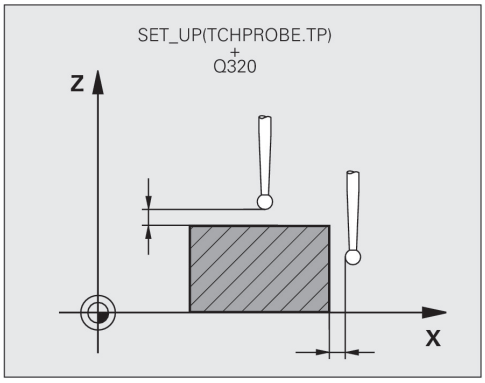

NC blocks

5 TCH PROBE 462 TS CALIBRATE IN RING	
Q407=+5	;RING RADIUS
Q320=+0	;SET-UP CLEARANCE
Q423=+8	;NO. OF PROBE POINTS
Q380=+0	;REFERENCE ANGLE

17.8 CALIBRATE TS RADIUS OUTSIDE (Cycle 463, DIN/ISO: G463)

Cycle run

Before starting the calibration cycle, you need to preposition the touch probe above the center of the calibration pin. Position the touch probe in the touch probe axis by approximately the safety clearance (value from touch probe table + value from cycle) above the calibration pin.

When calibrating the ball tip radius, the TNC executes an automatic probing routine. During the first probing cycle, the TNC determines the center of the calibration ring or stud (coarse measurement) and positions the touch probe in the center. Then the ball tip radius is determined during the actual calibration process (fine measurement). If the touch probe allows probing from opposite orientations, the center offset is determined during another cycle.

The touch probe orientation determines the calibration routine:

- No orientation possible or orientation possible in only one direction: The TNC executes one approximate and one fine measurement and determines the effective ball tip radius (column R in tool.t)
- Orientation possible in two directions (e.g. HEIDENHAIN touch probes with cable): The TNC executes one approximate and one fine measurement, rotates the touch probe by 180° and then executes four more probing operations. The center offset (CAL_OF in tchprobe.tp) is determined in addition to the radius by probing from opposite orientations.
- Any orientation possible (e.g. HEIDENHAIN infrared touch probes): For probing routine, see "orientation possible in two directions."

Please note while programming:

HEIDENHAIN only gives warranty for the function of the probing cycles if HEIDENHAIN touch probes are used.

Before a cycle definition you must have programmed a tool call to define the touch probe axis.

The center offset can be determined only with a suitable touch probe.

In order to be able to determine the ball-tip center misalignment, the TNC needs to be specially prepared by the machine manufacturer. The machine manual provides further information.

The characteristic of whether and how your touch probe can be oriented is already defined in HEIDENHAIN touch probes. Other touch probes are configured by the machine tool builder.

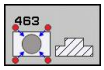

- **STUD RADIUS** Q407: Diameter of the ring gauge. Input range 0 to 99.9999
- **SET-UP CLEARANCE** Q320 (incremental): Additional distance between measuring point and ball tip. Q320 is added to SET_UP (touch probe table). Input range 0 to 99999.9999
- **MOVE TO CLEARANCE** Q301: Definition of how the touch probe is to move between the measuring points:
  0: Move at measuring height between measuring points
  1: Move at clearance height between measuring points
- **NO. OF PROBE POINTS** Q407 (absolute): Number of measuring points on the diameter. Input range 0 to 8
- **REFERENCE ANGLE** Q380 (absolute): Angle between the reference axis of the working plane and the first touch point. Input range 0 to 360.0000

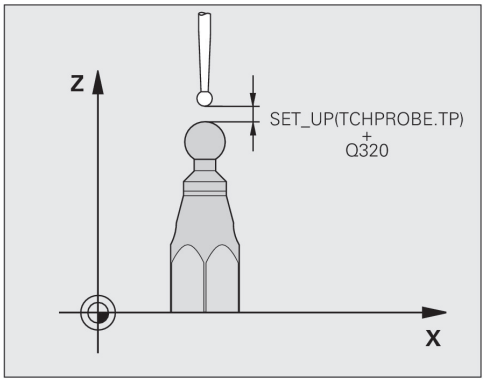

NC blocks

5 TCH PROBE 463 TS CALIBRATE ON STUD	
Q407=+5	;STUD RADIUS
Q320=+0	;SET-UP CLEARANCE
Q301=+1	;MOVE TO CLEARANCE
Q423=+8	;NO. OF PROBE POINTS
Q380=+0	;REFERENCE ANGLE

18

Touch Probe Cycles: Automatic Tool Measurement

18.1 Fundamentals

Overview

When running touch probe cycles, Cycle 8 MIRROR IMAGE, Cycle 11 SCALING and Cycle 26 AXIS-SPECIFIC SCALING must not be active.

HEIDENHAIN only gives warranty for the function of the probing cycles if HEIDENHAIN touch probes are used.

The TNC and the machine tool must be set up by the machine tool builder for use of the TT touch probe.

Some cycles and functions may not be provided on your machine tool. Refer to your machine manual.

In conjunction with the TNC's tool measurement cycles, the tool touch probe enables you to measure tools automatically. The compensation values for tool length and radius can be stored in the central tool file TOOL.T and are accounted for at the end of the touch probe cycle. The following types of tool measurement are provided:

- Tool measurement while the tool is at standstill
- Tool measurement while the tool is rotating
- Measurement of individual teeth

You can program the cycles for tool measurement in the Programming and Editing mode of operation via the TOUCH PROBE key. The following cycles are available:

Cycle	New format	Old format	Page
Calibrating the TT, Cycles 30 and 480			388
Calibrating the wireless TT 449, Cycle 484			389
Measuring the tool length, Cycles 31 and 481			390
Measuring the tool radius, Cycles 32 and 482			392
Measuring the tool length and radius, Cycles 33 and 483			394

The measuring cycles can be used only when the central tool file TOOL.T is active.

Before working with the measuring cycles, you must first enter all the required data into the central tool file and call the tool to be measured with **TOOL CALL**.

Differences between Cycles 31 to 33 and Cycles 481 to 483

The features and the operating sequences are absolutely identical. There are only two differences between Cycles 31 to 33 and Cycles 481 to 483:

- Cycles 481 to 483 are also available in controls for ISO programming under G481 to G483.
- Instead of a selectable parameter for the status of the measurement, the new cycles use the fixed parameter **Q199**.

Setting machine parameters

Before you start work with the TT cycles, inspect all machine parameters defined in **ProbeSettings** > **CfgToolMeasurement** and **CfgTTRoundStylus**.

The TNC uses the feed rate for probing defined in **probingFeed** when measuring a tool at standstill.

When measuring a rotating tool, the TNC automatically calculates the spindle speed and feed rate for probing.

The spindle speed is calculated as follows:

n = **maxPeriphSpeedMeas** / (r • 0.0063) where

n:	Spindle speed [rpm]
maxPeriphSpeedMeas:	Maximum permissible cutting speed in m/min
r:	Active tool radius in mm

The feed rate for probing is calculated from:
v = measuring tolerance • n with

v:	Feed rate for probing in mm/min
Measuring tolerance	Measuring tolerance [mm], depending on **maxPeriphSpeedMeas**
n:	Shaft speed [rpm]

probingFeedCalc determines the calculation of the probing feed rate:

probingFeedCalc = **ConstantTolerance**:

The measuring tolerance remains constant regardless of the tool radius. With very large tools, however, the feed rate for probing is reduced to zero. The smaller you set the maximum permissible rotational speed (**maxPeriphSpeedMeas**) and the permissible tolerance (**measureTolerance1**), the sooner you will encounter this effect.

probingFeedCalc = **VariableTolerance**:

The measuring tolerance is adjusted relative to the size of the tool radius. This ensures a sufficient feed rate for probing even with large tool radii. The TNC adjusts the measuring tolerance according to the following table:

Tool radius	Measuring tolerance
Up to 30 mm	**measureTolerance1**
30 to 60 mm	2 • **measureTolerance1**
60 to 90 mm	3 • **measureTolerance1**
90 to 120 mm	4 • **measureTolerance1**

probingFeedCalc = **ConstantFeed**:

The feed rate for probing remains constant; the error of measurement, however, rises linearly with the increase in tool radius:

Measuring tolerance = r • **measureTolerance1**/ 5 mm, where

r:	Active tool radius in mm
measureTolerance1:	Maximum permissible error of measurement

Entries in the tool table TOOL.T

Abbr.	Inputs	Dialog
CUT	Number of teeth (20 teeth maximum)	**Number of teeth?**
LTOL	Permissible deviation from tool length L for wear detection. If the entered value is exceeded, the TNC locks the tool (status **L**). Input range: 0 to 0.9999 mm	**Wear tolerance: length?**
RTOL	Permissible deviation from tool radius R for wear detection. If the entered value is exceeded, the TNC locks the tool (status **L**). Input range: 0 to 0.9999 mm	**Wear tolerance: radius?**
DIRECT.	Cutting direction of the tool for measuring the tool during rotation	**Cutting direction (M3 = -)?**
R_OFFS	Tool length measurement: Tool offset between stylus center and tool center. Default setting: No value entered (offset = tool radius)	**Tool offset: radius?**
L_OFFS	Tool radius measurement: tool offset in addition to **offsetToolAxis** between upper surface of stylus and lower surface of tool. Default: 0	**Tool offset: length?**
LBREAK	Permissible deviation from tool length L for breakage detection. If the entered value is exceeded, the TNC locks the tool (status **L**). Input range: 0 to 0.9999 mm	**Breakage tolerance: length?**
RBREAK	Permissible deviation from tool radius R for breakage detection. If the entered value is exceeded, the TNC locks the tool (status **L**). Input range: 0 to 0.9999 mm	**Breakage tolerance: radius?**

Input examples for common tool types

Tool type	CUT	TT:R_OFFS	TT:L_OFFS
Drill	– (no function)	0 (no offset required because tool tip is to be measured)	
End mill with diameter of < 19 mm	4 (4 teeth)	0 (no offset required because tool diameter is smaller than the contact plate diameter of the TT)	0 (no additional offset required during radius measurement. Offset from **offsetToolAxis** is used)
End mill with diameter of > 19 mm	4 (4 teeth)	R (offset required because tool diameter is larger than the contact plate diameter of the TT)	0 (no additional offset required during radius measurement. Offset from **offsetToolAxis** is used)
Radius cutter	4 (4 teeth)	0 (no offset required because the south pole of the ball is to be measured)	5 (always define the tool radius as the offset so that the diameter is not measured in the radius)

18.2 Calibrate the TT (Cycle 30 or 480, DIN/ISO: G480)

Cycle run

The TT is calibrated with the measuring cycle TCH PROBE 30 or TCH PROBE 480 (See "Differences between Cycles 31 to 33 and Cycles 481 to 483", page 385). The calibration process is automatic. The TNC also measures the center misalignment of the calibrating tool automatically by rotating the spindle by 180° after the first half of the calibration cycle.

The calibrating tool must be a precisely cylindrical part, for example a cylinder pin. The resulting calibration values are stored in the TNC memory and are accounted for during subsequent tool measurement.

Please note while programming:

The functioning of the calibration cycle is dependent on machine parameter **CfgToolMeasurement**. Refer to your machine tool manual.

Before calibrating the touch probe, you must enter the exact length and radius of the calibrating tool into the tool table TOOL.T.

The position of the TT within the machine working space must be defined by setting the Machine Parameters **centerPos** > **[0]** to **[2]**.

If you change the setting of any of the Machine Parameters **centerPos** > **[0]** to **[2]**, you must recalibrate.

Cycle parameters

- **Clearance height**: Enter the position in the spindle axis at which there is no danger of collision with the workpiece or fixtures. The clearance height is referenced to the active workpiece datum. If you enter such a small clearance height that the tool tip would lie below the level of the probe contact, the TNC automatically positions the tool above the level of the probe contact (safety zone from **safetyDistStylus**). Input range -99999.9999 to 99999.9999

NC blocks in old format

```
6 TOOL CALL 1 Z
7 TCH PROBE 30.0 CALIBRATE TT
8 TCH PROBE 30.1 HEIGHT: +90
```

NC blocks in new format

```
6 TOOL CALL 1 Z
7 TCH PROBE 480 CALIBRATE TT
    Q260=+100 ;CLEARANCE HEIGHT
```

18.3 Calibrating the wireless TT 449 (Cycle 484, DIN/ISO: G484)

Fundamentals

With Cycle 484, you calibrate the wireless infrared TT 449 tool touch probe. The calibration process is not completely automated, because the TT's position on the table is not defined.

Cycle run

- Insert the calibrating tool
- Define and start the calibration cycle
- Position the calibrating tool manually above the center of the touch probe and follow the instructions in the pop-up window. Ensure that the calibrating tool is located above the measuring surface of the probe contact

The calibration process is semi-automatic. The TNC also measures the center misalignment of the calibrating tool by rotating the spindle by 180° after the first half of the calibration cycle.

The calibrating tool must be a precisely cylindrical part, for example a cylinder pin. The resulting calibration values are stored in the TNC memory and are accounted for during subsequent tool measurement.

The calibration tool should have a diameter of more than 15 mm and protrude approx. 50 mm from the chuck. This configuration causes a deformation of 0.1 µm per 1 N of probing force.

Please note while programming:

The functioning of the calibration cycle is dependent on machine parameter **CfgToolMeasurement**. Refer to your machine manual.

Before calibrating the touch probe, you must enter the exact length and radius of the calibrating tool into the tool table TOOL.T.

The TT needs to be recalibrated if you change its position on the table.

Cycle parameters

Cycle 484 has no cycle parameters.

18.4 Measuring tool length (Cycle 31 or 481, DIN/ISO: G481)

Cycle run

To measure the tool length, program the measuring cycle TCH PROBE 31 or TCH PROBE 480 (See "Differences between Cycles 31 to 33 and Cycles 481 to 483", page 385). Via input parameters you can measure the length of a tool by three methods:

- If the tool diameter is larger than the diameter of the measuring surface of the TT, you measure the tool while it is rotating.
- If the tool diameter is smaller than the diameter of the measuring surface of the TT, or if you are measuring the length of a drill or spherical cutter, you measure the tool while it is at standstill.
- If the tool diameter is larger than the diameter of the measuring surface of the TT, you measure the individual teeth of the tool while it is at standstill.

Cycle for measuring a tool during rotation

The control determines the longest tooth of a rotating tool by positioning the tool to be measured at an offset to the center of the touch probe and then moving it toward the measuring surface of the TT until it contacts the surface. The offset is programmed in the tool table under Tool offset: Radius (**TT: R_OFFS**).

Cycle for measuring a tool during standstill (e.g. for drills)

The control positions the tool to be measured over the center of the measuring surface. It then moves the non-rotating tool toward the measuring surface of the TT until it touches the surface. To activate this function, enter zero for the tool offset: Radius (**TT: R_OFFS**) in the tool table.

Cycle for measuring individual teeth

The TNC pre-positions the tool to be measured to a position at the side of the touch probe head. The distance from the tip of the tool to the upper edge of the touch probe head is defined in **offsetToolAxis**. You can enter an additional offset with tool offset: Length (**TT: L_OFFS**) in the tool table. The TNC probes the tool radially during rotation to determine the starting angle for measuring the individual teeth. It then measures the length of each tooth by changing the corresponding angle of spindle orientation. To activate this function, program TCH PROBE 31 = 1 for CUTTER MEASUREMENT.

Please note while programming:

Before measuring a tool for the first time, enter the following data on the tool into the tool table TOOL.T: the approximate radius, the approximate length, the number of teeth, and the cutting direction.

You can run an individual tooth measurement of tools with **up to 20 teeth**.

Cycle parameters

- **Measure tool=0 / Check tool=1**: Select whether the tool is to be measured for the first time or whether a tool that has already been measured is to be inspected. If the tool is being measured for the first time, the TNC overwrites the tool length L in the central tool file TOOL.T by the delta value DL = 0. If you wish to inspect a tool, the TNC compares the measured length with the tool length L that is stored in TOOL.T. It then calculates the positive or negative deviation from the stored value and enters it into TOOL.T as the delta value DL. The deviation can also be used for Q-parameter Q115. If the delta value is greater than the permissible tool length tolerance for wear or break detection, the TNC will lock the tool (status L in TOOL.T).
- **Parameter number for result ?**: Parameter number in which the TNC saves the status of the measurement result:
  0.0: Tool is within tolerance
  1.0: Tool is worn (**LTOL** exceeded)
  2.0: Tool is broken (**LBREAK** exceeded).
  If you do not wish to use the result of measurement within the program, answer the dialog prompt with NO ENT.
- **Clearance height**: Enter the position in the spindle axis at which there is no danger of collision with the workpiece or fixtures. The clearance height is referenced to the active workpiece datum. If you enter such a small clearance height that the tool tip would lie below the level of the probe contact, the TNC automatically positions the tool above the level of the probe contact (safety zone from **safetyDistStylus**). Input range -99999.9999 to 99999.9999
- **Cutter measurement? 0=No / 1=Yes**: Choose whether the control is to measure the individual teeth (maximum of 20 teeth)

Measuring a rotating tool for the first time; old format

```
6 TOOL CALL 12 Z
7 TCH PROBE 31.0 TOOL LENGTH
8 TCH PROBE 31.1 CHECK: 0
9 TCH PROBE 31.2 HEIGHT: +120
10 TCH PROBE 31.3 PROBING THE TEETH: 0
```

Inspecting a tool and measuring the individual teeth and saving the status in Q5; old format

```
6 TOOL CALL 12 Z
7 TCH PROBE 31.0 TOOL LENGTH
8 TCH PROBE 31.1 CHECK: 1 Q5
9 TCH PROBE 31.2 HEIGHT: +120
10 TCH PROBE 31.3 PROBING THE TEETH:1
```

NC blocks in new format

```
6 TOOL CALL 12 Z
7 TCH PROBE 481 TOOL LENGTH
    Q340=1      ;CHECK
    Q260=+100 ;CLEARANCE HEIGHT
    Q341=1      ;PROBING THE TEETH
```

18.5 Measuring tool radius (Cycle 32 or 482, DIN/ISO: G482)

Cycle run

To measure the tool radius, program the cycle TCH PROBE 32 or TCH PROBE 482 (See "Differences between Cycles 31 to 33 and Cycles 481 to 483", page 385). Select via input parameters by which of two methods the radius of a tool is to be measured:

- Measuring the tool while it is rotating
- Measuring the tool while it is rotating and subsequently measuring the individual teeth.

The TNC pre-positions the tool to be measured to a position at the side of the touch probe head. The distance from the tip of the milling tool to the upper edge of the touch probe head is defined in **offsetToolAxis**. The TNC probes the tool radially while it is rotating. If you have programmed a subsequent measurement of individual teeth, the control measures the radius of each tooth with the aid of oriented spindle stops.

Please note while programming:

Before measuring a tool for the first time, enter the following data on the tool into the tool table TOOL.T: the approximate radius, the approximate length, the number of teeth, and the cutting direction.

Cylindrical tools with diamond surfaces can be measured with stationary spindle. To do so, define in the tool table the number of teeth **CUT** as 0 and adjust machine parameter **CfgToolMeasurement**. Refer to your machine manual.

Cycle parameters

- **Measure tool=0 / Check tool=1**: Select whether the tool is to be measured for the first time or whether a tool that has already been measured is to be inspected. If the tool is being measured for the first time, the TNC overwrites the tool radius R in the central tool file TOOL.T by the delta value DR = 0. If you wish to inspect a tool, the TNC compares the measured radius with the tool radius R that is stored in TOOL.T. It then calculates the positive or negative deviation from the stored value and enters it into TOOL.T as the delta value DR. The deviation can also be used for Q-parameter Q116. If the delta value is greater than the permissible tool radius tolerance for wear or break detection, the TNC will lock the tool (status L in TOOL.T).
- **Parameter number for result ?**: Parameter number in which the TNC saves the status of the measurement result:
  0.0: Tool is within tolerance
  1.0: Tool is worn (**RTOL** exceeded)
  2.0: Tool is broken (**RBREAK** exceeded).
  If you do not wish to use the result of measurement within the program, answer the dialog prompt with NO ENT.
- **Clearance height**: Enter the position in the spindle axis at which there is no danger of collision with the workpiece or fixtures. The clearance height is referenced to the active workpiece datum. If you enter such a small clearance height that the tool tip would lie below the level of the probe contact, the TNC automatically positions the tool above the level of the probe contact (safety zone from safetyDistStylus). Input range -99999.9999 to 99999.9999
- **Cutter measurement? 0=No / 1=Yes**: Choose whether the control is also to measure the individual teeth (maximum of 20 teeth)

Measuring a rotating tool for the first time; old format

```
6 TOOL CALL 12 Z
7 TCH PROBE 32.0 TOOL RADIUS
8 TCH PROBE 32.1 CHECK: 0
9 TCH PROBE 32.2 HEIGHT: +120
10 TCH PROBE 32.3 PROBING THE TEETH: 0
```

Inspecting a tool and measuring the individual teeth and saving the status in Q5; old format

```
6 TOOL CALL 12 Z
7 TCH PROBE 32.0 TOOL RADIUS
8 TCH PROBE 32.1 CHECK: 1 Q5
9 TCH PROBE 32.2 HEIGHT: +120
10 TCH PROBE 32.3 PROBING THE TEETH: 1
```

NC blocks in new format

```
6 TOOL CALL 12 Z
7 TCH PROBE 482 TOOL RADIUS
    Q340=1      ;CHECK
    Q260=+100 ;CLEARANCE HEIGHT
    Q341=1      ;PROBING THE TEETH
```

18.6 Measuring tool length and radius (Cycle 33 or 483, DIN/ISO: G483)

Cycle run

To measure both the length and radius of a tool, program the measuring cycle TCH PROBE 33 or TCH PROBE 482 (See "Differences between Cycles 31 to 33 and Cycles 481 to 483", page 385). This cycle is particularly suitable for the first measurement of tools, as it saves time when compared with individual measurement of length and radius. Via input parameters you can select the desired type of measurement:

- Measuring the tool while it is rotating
- Measuring the tool while it is rotating and subsequently measuring the individual teeth.

The TNC measures the tool in a fixed programmed sequence. First it measures the tool radius, then the tool length. The sequence of measurement is the same as for measuring cycles 31 and 32.

Please note while programming:

Before measuring a tool for the first time, enter the following data on the tool into the tool table TOOL.T: the approximate radius, the approximate length, the number of teeth, and the cutting direction.

Cylindrical tools with diamond surfaces can be measured with stationary spindle. To do so, define in the tool table the number of teeth **CUT** as 0 and adjust machine parameter **CfgToolMeasurement**. Refer to your machine manual.

Cycle parameters

- **Measure tool=0 / Check tool=1**: Select whether the tool is to be measured for the first time or whether a tool that has already been measured is to be inspected. If the tool is being measured for the first time, the TNC overwrites the tool radius R and the tool length L in the central tool file TOOL.T by the delta values DR = 0 and DL = 0. If you wish to inspect a tool, the TNC compares the measured data with the tool data stored in TOOL.T. The TNC calculates the deviations and enters them as positive or negative delta values DR and DL in TOOL.T. The deviations are also available in the Q parameters Q115 and Q116. If the delta values are greater than the permissible tool tolerances for wear or break detection, the TNC will lock the tool (status L in TOOL.T).
- **Parameter number for result ?**: Parameter number in which the TNC saves the status of the measurement result:
  0.0: Tool is within tolerance
  1.0: Tool is worn (**LTOL** and/or **RTOL** exceeded)
  2,0: Tool is broken (**LBREAK** and/or **RBREAK** exceeded).
  If you do not wish to use the result of measurement within the program, answer the dialog prompt with NO ENT.
- **Clearance height**: Enter the position in the spindle axis at which there is no danger of collision with the workpiece or fixtures. The clearance height is referenced to the active workpiece datum. If you enter such a small clearance height that the tool tip would lie below the level of the probe contact, the TNC automatically positions the tool above the level of the probe contact (safety zone from safetyDistStylus). Input range -99999.9999 to 99999.9999
- **Cutter measurement? 0=No / 1=Yes**: Choose whether the control is also to measure the individual teeth (maximum of 20 teeth)

Measuring a rotating tool for the first time; old format

```
6 TOOL CALL 12 Z
7 TCH PROBE 33.0 MEASURE TOOL
8 TCH PROBE 33.1 CHECK: 0
9 TCH PROBE 33.2 HEIGHT: +120
10 TCH PROBE 33.3 PROBING THE TEETH: 0
```

Inspecting a tool and measuring the individual teeth and saving the status in Q5; old format

```
6 TOOL CALL 12 Z
7 TCH PROBE 33.0 MEASURE TOOL
8 TCH PROBE 33.1 CHECK: 1 Q5
9 TCH PROBE 33.2 HEIGHT: +120
10 TCH PROBE 33.3 PROBING THE TEETH: 1
```

NC blocks in new format

```
6 TOOL CALL 12 Z
7 TCH PROBE 483 MEASURE TOOL
    Q340=1      ;CHECK
    Q260=+100 ;CLEARANCE HEIGHT
    Q341=1      ;PROBING THE TEETH
```

19

Tables of Cycles

19.1 Overview

Fixed cycles

Cycle number	Cycle designation	DEF active	CALL active	Page
7	Datum shift	■		221
8	Mirror image	■		227
9	Dwell time	■		243
10	Rotation	■		228
11	Scaling factor	■		230
12	Program call	■		244
13	Spindle orientation	■		245
14	Contour definition	■		156
19	Tilting the working plane	■		232
20	Contour data SL II	■		160
21	Pilot drilling SL II		■	162
22	Rough out SL II		■	164
23	Floor finishing SL II		■	167
24	Side finishing SL II		■	168
25	Contour train		■	170
26	Axis-specific scaling	■		231
27	Cylinder surface		■	179
28	Cylindrical surface slot		■	182
29	Cylinder surface ridge		■	185
32	Tolerance	■		246
200	Drilling		■	63
201	Reaming		■	65
202	Boring		■	67
203	Universal drilling		■	70
204	Back boring		■	73
205	Universal pecking		■	76
206	Tapping with a floating tap holder, new		■	89
207	Rigid tapping, new		■	91
208	Bore milling		■	79
209	Tapping with chip breaking		■	93
220	Polar pattern	■		147
221	Cartesian pattern	■		149
225	Engraving		■	249
230	Multipass milling		■	207
231	Ruled surface		■	209
232	Face milling		■	213

Cycle number	Cycle designation	DEF active	CALL active	Page
240	Centering		■	61
241	Single-lip deep-hole drilling		■	81
247	Datum setting	■		226
251	Rectangular pocket (complete machining)		■	119
252	Circular pocket (complete machining)		■	123
253	Slot milling		■	127
254	Circular slot		■	131
256	Rectangular stud (complete machining)		■	136
257	Circular stud (complete machining)		■	140
262	Thread milling		■	99
263	Thread milling/countersinking		■	102
264	Thread drilling/milling		■	105
265	Helical thread drilling/milling		■	108
267	Outside thread milling		■	112

Touch probe cycles

Cycle number	Cycle designation	DEF active	CALL active	Page
0	Reference plane	■		336
1	Polar datum	■		337
3	Measuring	■		371
30	Calibrate the TT	■		388
31	Measure/Inspect the tool length	■		390
32	Measure/inspect the tool radius	■		392
33	Measure/Inspect the tool length and the tool radius	■		394
400	Basic rotation using two points	■		266
401	Basic rotation over two holes	■		268
402	Basic rotation over two studs	■		270
403	Compensate misalignment with rotary axis	■		273
404	Set basic rotation	■		276
405	Compensate misalignment with the C axis	■		277
408	Reference point at slot center (FCL 3 function)	■		286
409	Reference point at ridge center (FCL 3 function)	■		289
410	Datum from inside of rectangle	■		292
411	Datum from outside of rectangle	■		296
412	Datum from inside of circle (hole)	■		300
413	Datum from outside of circle (stud)	■		304
414	Datum from outside of corner	■		308
415	Datum from inside of corner	■		312

19.1 Overview

Cycle number	Cycle designation	DEF active	CALL active	Page
416	Datum from circle center	■		315
417	Datum in touch probe axis	■		318
418	Datum at center between four holes	■		320
419	Datum in any one axis	■		323
420	Workpiece—measure angle	■		338
421	Workpiece—measure hole (center and diameter of hole)	■		340
422	Workpiece—measure circle from outside (diameter of circular stud)	■		343
423	Workpiece—measure rectangle from inside	■		346
424	Workpiece—measure rectangle from outside	■		350
425	Workpiece—measure inside width (slot)	■		353
426	Workpiece—measure outside width (ridge)	■		356
427	Workpiece—measure in any selectable axis	■		358
430	Workpiece—measure bolt hole circle	■		360
431	Workpiece—measure plane	■		360
460	Calibrate the touch probe	■		375
461	Calibrate touch probe length	■		377
462	Calibrate touch probe inside radius	■		378
463	Calibrate touch probe outside radius	■		380
480	Calibrate the TT	■		388
481	Measure/Inspect the tool length	■		390
482	Measure/Inspect the tool radius	■		392
483	Measure/Inspect the tool length and the tool radius	■		394

Index

3

3D Touch Probes..... 254
3-D touch probes..... 38

A

Automatic datum setting..... 282
At center of 4 holes..... 320
Center of a bolt hole circle..... 315
Center of a circular pocket (hole)..... 300
Center of a circular stud..... 304
Center of a rectangular pocket..... 292
Center of a rectangular stud... 296
In any axis..... 323
Inside of corner..... 312
In the touch probe axis..... 318
Outside of corner..... 308
Ridge center..... 289
Slot center..... 286
Automatic tool measurement... 387
Axis-specific scaling..... 231

B

Back boring..... 73
Basic rotation
Measure during program run.. 264
Bolt hole circle..... 147
Bore milling..... 79
Boring..... 67

C

Centering..... 61
Circular pocket
Roughing+finishing..... 123
Circular point patterns..... 147
Circular slot
Roughing+finishing..... 131
Circular stud..... 140
Classification of results..... 333
Compensating workpiece misalignment..... 264
By measuring two points on a straight surface..... 266
Over two circular studs..... 270
Over two holes..... 268
Via rotary axis..... 273, 277
Confidence interval..... 258
Consideration of basic rotation. 254
Contour cycles..... 154
Contour train..... 170
Coordinate transformation..... 220
Cycle..... 42
Calling..... 44
Define..... 42
Cycles and point tables..... 58
Cylinder surface
Machine contour..... 179
Ridge machining..... 185
Slot machining..... 182

D

Datum shift..... 221
in the program..... 221
With datum tables..... 222
Deepened starting point with drilling..... 78, 82
Drilling..... 63, 70, 76
Deepened starting point..... 78, 82
Drilling Cycles..... 60
Dwell time..... 243

E

Engraving..... 249

F

Face milling..... 213
FCL function..... 7
Feature Content Level..... 7
Floor finishing..... 167
Fundamentals of Thread Milling. 97

H

Helical thread drilling/milling..... 108

I

Inside thread milling..... 99

L

Linear point patterns..... 149

M

Machine parameters for 3D touch probe..... 257
Machining pattern..... 50
Measure angle..... 338
Measure angle of a plane..... 363
Measure any coordinate..... 358
Measure bolt hole circle..... 360
Measure hole..... 340
measure hole inside..... 340
Measure hole outside..... 343
Measurement parameters..... 333
Measurement results in Q parameters..... 333
Measure rectangular pocket..... 350
Measure rectangular stud..... 346
Measure the plane angle..... 363
Measure the slot width..... 353
Measure the width of a ridge..... 356, 356
Measuring slot width..... 353
Measuring the width of a ridge 356
Mirroring..... 227
Multiple measurements..... 258

O

Outside thread milling..... 112

P

Pattern definition..... 50
Peck drilling..... 76, 81
Deepened starting point..... 78, 82
Point patterns..... 146
Overview..... 146
Point tables..... 56
Positioning logic..... 259
Probing feed rate..... 258
Program call..... 244
Via cycle..... 244

R

Reaming..... 65
Recording measurement results.... 331
Rectangular pocket
Roughing+finishing..... 119
Rectangular stud..... 136
Rotation..... 228
Roughing:See SL Cycles, Roughing..... 164
Ruled surface..... 209

S

Scaling..... 230
Set a basic rotation..... 276
Side finishing..... 168
Single-lip deep-hole drilling..... 81
SL Cycles..... 154, 179
Contour cycle..... 156
Contour data..... 160
Contour train..... 170
Floor finishing..... 167
SL cycles
Fundamentals..... 154
Fundamentals..... 202
SL Cycles
Pilot drilling..... 162
Roughing..... 164
Side finishing..... 168
Superimposed contours. 157, 196
SL cycles with complex contour formula..... 192
SL cycles with simple contour formula..... 202
Slot milling
Roughing+finishing..... 127
Spindle orientation..... 245

T

Tapping
With a floating tap holder..... 89
With chip breaking..... 93
Without a floating tap holder..... 91, 93

Thread drilling/milling..... 105
Thread milling/countersinking... 102
Tilting function
  Procedure..... 237
Tilting the working plane.. 232, 232
  Cycle..... 232
Tolerance monitoring..... 333
Tool compensation..... 334
Tool measurement..... 384, 387
  Calibrate TT..... 388, 389
  Machine parameters..... 385
  Measuring tool length and
  radius..... 394
  Tool length..... 390
  Tool radius..... 392
Tool monitoring..... 334
Touch probe cycles
  For automatic mode..... 256
Touch probe data..... 261
Touch probe table..... 260

U

Universal drilling..... 70, 76

W

Workpiece Measurement..... 330

HEIDENHAIN

DR. JOHANNES HEIDENHAIN GmbH
Dr.-Johannes-Heidenhain-Straße 5
83301 Traunreut, Germany
☏ +49 8669 31-0
FAX +49 8669 5061
E-mail: info@heidenhain.de

Technical support FAX +49 8669 32-1000
Measuring systems ☏ +49 8669 31-3104
E-mail: service.ms-support@heidenhain.de
TNC support ☏ +49 8669 31-3101
E-mail: service.nc-support@heidenhain.de
NC programming ☏ +49 8669 31-3103
E-mail: service.nc-pgm@heidenhain.de
PLC programming ☏ +49 8669 31-3102
E-mail: service.plc@heidenhain.de
Lathe controls ☏ +49 8669 31-3105
E-mail: service.lathe-support@heidenhain.de

www.heidenhain.de

Touch probes from HEIDENHAIN

help you reduce non-productive time and
improve the dimensional accuracy of the finished workpieces.

Workpiece touch probes

TS 220	Signal transmission by cable
TS 440, TS 444	Infrared transmission
TS 640, TS 740	Infrared transmission

- Workpiece alignment
- Setting datums
- Workpiece measurement

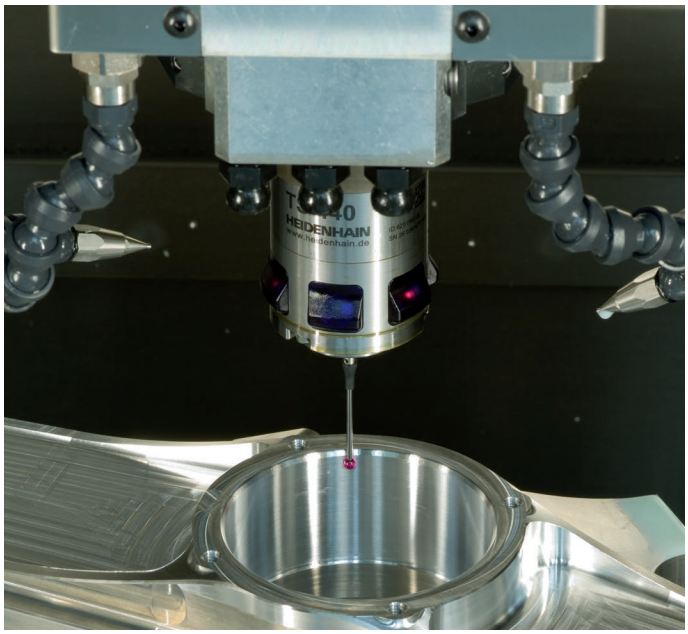

Tool touch probes

TT 140	Signal transmission by cable
TT 449	Infrared transmission
TL	Contact-free laser systems

- Tool measurement
- Wear monitoring
- Tool breakage detection

679220-22 · Ver02 · SW06 · 5/2013 · Printed in Germany · F&W