HEIDENHAIN

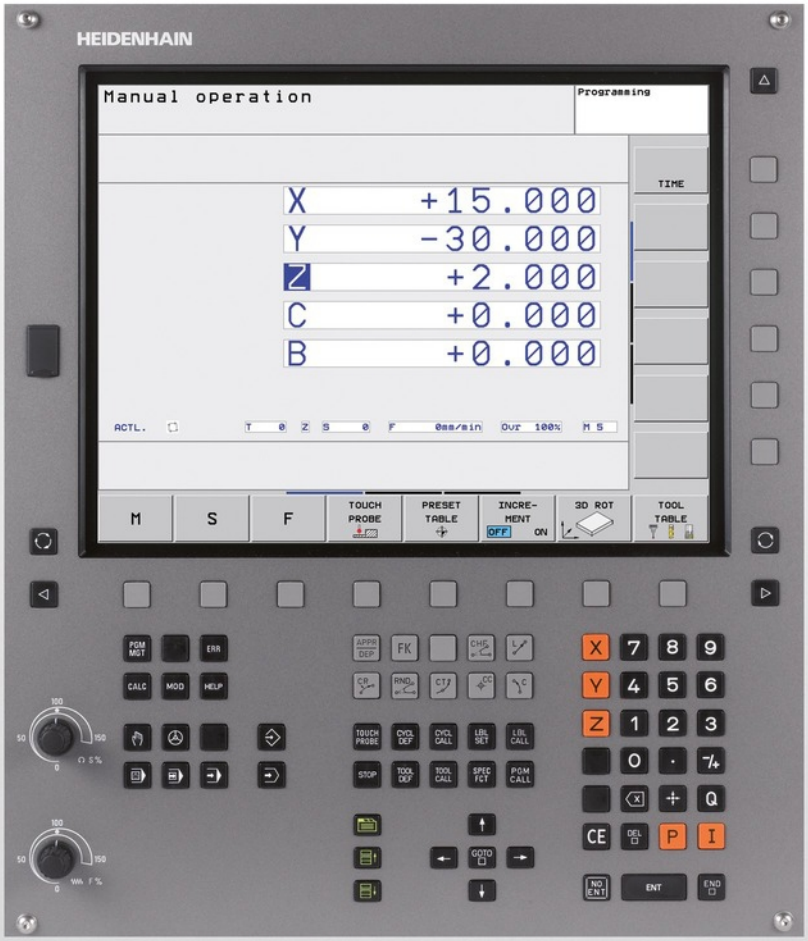

TNC 320

User's Manual

HEIDENHAIN
Conversational Programming

NC Software
340551-06
340554-06

English (en)
5/2013

Controls of the TNC

Keys on visual display unit

Key	Function
	Select split screen layout
	Toggle the display between machining and programming modes
	Soft keys for selecting functions on screen
	Shifting between soft-key rows

Machine operating modes

Key	Function
	Manual operation
	Electronic handwheel
	Positioning with manual data input
	Program run, single block
	Program run, full sequence

Programming modes

Key	Function
	Programming
	Test run

Program/file management, TNC functions

Key	Function
PGM MGT	Select or delete programs and files, external data transfer
PGM CALL	Define program call, select datum and point tables
MOD	Select MOD functions
HELP	Display help text for NC error messages, call TNCguide
ERR	Display all current error messages
CALC	Show calculator

Navigation keys

Key	Function
	Move highlight
GOTO	Go directly to blocks, cycles and parameter functions

Potentiometer for feed rate and spindle speed

Feed rate	Spindle speed

Cycles, subprograms and program section repeats

Key	Function
TOUCH PROBE	Define touch probe cycles
CYCL DEF / CYCL CALL	Define and call cycles
LBL SET / LBL CALL	Enter and call labels for subprogramming and program section repeats
STOP	Enter program stop in a program

Tool functions

Key	Function
TOOL DEF	Define tool data in the program
TOOL CALL	Call tool data

Programming path movements

Key	Function
APPR DEP	Approach/depart contour
FK	FK free contour programming
L	Straight line
CC	Circle center/pole for polar coordinates
C	Circular arc with center
CR	Circle with radius
CT	Circular arc with tangential connection
CHF / RND	Chamfer/Corner rounding

Special functions

Key	Function
SPEC FCT	Show special functions
	Select the next tab in forms
	Up/down one dialog box or button

Entering and editing coordinate axes and numbers

Key	Function
X V	Select coordinate axes or enter them in a program
0 9	Numbers
. / -/+	Decimal point / Reverse algebraic sign
P / I	Polar coordinate input / Incremental values
Q	Q-parameter programming / Q parameter status
	Save actual position or values from calculator
NO ENT	Skip dialog questions, delete words
ENT	Confirm entry and resume dialog
END	Conclude block and exit entry
CE	Clear numerical entry or TNC error message
DEL	Abort dialog, delete program section

Fundamentals

About this manual

The symbols used in this manual are described below.

This symbol indicates that important notes about the function described must be regarded.

This symbol indicates that there is one or more of the following risks when using the described function:

- Danger to workpiece
- Danger to fixtures
- Danger to tool
- Danger to machine
- Danger to operator

This symbol indicates a possibly dangerous situation that may cause light injuries if not avoided.

This symbol indicates that the described function must be adapted by the machine tool builder. The function described may therefore vary depending on the machine.

This symbol indicates that you can find detailed information about a function in another manual.

Would you like any changes, or have you found any errors?

We are continuously striving to improve our documentation for you. Please help us by sending your requests to the following e-mail address: **tnc-userdoc@heidenhain.de**.

TNC model, software and features

This manual describes functions and features provided by TNCs as of the following NC software numbers.

TNC model	NC software number
TNC 320	340551-06
TNC 320 Programming Station	340554-06

The suffix E indicates the export version of the TNC. The export version of the TNC has the following limitations:

- Simultaneous linear movement in up to 4 axes

The machine tool builder adapts the usable features of the TNC to his machine by setting machine parameters. Some of the functions described in this manual may therefore not be among the features provided by the TNC on your machine tool.

TNC functions that may not be available on your machine include:

- Tool measurement with the TT

Please contact your machine tool builder to become familiar with the features of your machine.

Many machine manufacturers, as well as HEIDENHAIN, offer programming courses for the TNCs. We recommend these courses as an effective way of improving your programming skill and sharing information and ideas with other TNC users.

User's Manual for Cycle Programming:

All of the cycle functions (touch probe cycles and fixed cycles) are described in the Cycle Programming User’s Manual. Please contact HEIDENHAIN if you require a copy of this User’s Manual. ID: 679 220-xx

Software options

The TNC 320 features various software options that can be enabled by your machine tool builder. Each option is to be enabled separately and contains the following respective functions:

Hardware, options	
	■ 1st additional axis for 4 axes plus spindle ■ 2nd additional axis for 5 axes plus spindle

Software option 1 (option number 08)	
Rotary table machining	■ Programming of cylindrical contours as if in two axes ■ Feed rate in distance per minute
Coordinate transformation	■ Working plane, tilting the ...
Interpolation	■ Circle in 3 axes with tilted working plane (spacial arc)

HEIDENHAIN DNC (option number 18)	
	■ Communication with external PC applications over COM component

Software option for additional conversational languages (option number 41)	
Additional conversational languages	■ Slovenian ■ Norwegian ■ Slovak ■ Latvian ■ Korean ■ Estonian ■ Turkish ■ Romanian ■ Lithuanian

Feature Content Level (upgrade functions)

Along with software options, significant further improvements of the TNC software are managed via the **F**eature **C**ontent **L**evel upgrade functions. Functions subject to the FCL are not available simply by updating the software on your TNC.

> All upgrade functions are available to you without surcharge when you receive a new machine.

Upgrade functions are identified in the manual with **FCL n,** where **n** indicates the sequential number of the feature content level.

You can purchase a code number in order to permanently enable the FCL functions. For more information, contact your machine tool builder or HEIDENHAIN.

Intended place of operation

The TNC complies with the limits for a Class A device in accordance with the specifications in EN 55022, and is intended for use primarily in industrially-zoned areas.

Legal information

This product uses open source software. Further information is available on the control under

- Programming and Editing operating mode
- MOD function
- LICENSE INFO soft key

New functions

New functions 34055x-06

The active tool-axis direction can now be activated in manual mode and during handwheel superimposition as a virtual tool axis (Superimposing handwheel positioning during program run: M118 , page 318).

Writing and reading data in freely definable tables (Freely definable tables, page 341).

New touch probe cycle 484 for calibrating the wireless TT 449 tool touch probe (see User's Manual for Cycles).

The new HR 520 and HR 550 FS handwheels are supported (Traverse with electronic handwheels, page 380).

New machining cycle 225 ENGRAVING (see User’s Manual for Cycle Programming)

New manual probing cycle "Center line as datum" (Setting a center line as datum , page 419).

New function for rounding corners (Rounding corners: M197, page 324).

External access to the TNC can now be blocked with a MOD function (External access).

Modified functions 34055x-06

The maximum number of characters for the NAME and DOC fields in the tool table has been increased from 16 to 32 (Enter tool data into the table, page 144).

Operation and position behavior of the manual probing cycles has been improved (Using 3-D touch probes , page 399).

Predefined values can now be entered into a cycle parameter with the PREDEF function in cycles (see User’s Manual for Cycle Programming).

A new optimization algorithm is now used with the KinematicsOpt cycles (see User’s Manual for Cycle Programming).

With Cycle 257, circular stud milling, a parameter is now available with which you can determine the approach position on the stud (see User's Manual for Cycle Programming)

With Cycle 256, rectangular stud, a parameter is now available with which you can determine the approach position on the stud (see User's Manual for Cycle Programming).

With the "Basic Rotation" probing cycle, workpiece misalignment can now be compensated for via a table rotation (Compensation of workpiece misalignment by rotating the table, page 412)

Contents

1 First Steps with the TNC 320 41
2 Introduction 63
3 Programming: Fundamentals, file management 79
4 Programming: Programming aids 115
5 Programming: Tools 139
6 Programming: Programming contours 167
7 Programming: Subprograms and program section repeats 219
8 Programming: Q Parameters 235
9 Programming: Miscellaneous functions 305
10 Programming: Special functions 325
11 Programming: Multiple Axis Machining 347
12 Manual operation and setup 375
13 Positioning with Manual Data Input 431
14 Test run and program run 437
15 MOD functions 463
16 Tables and overviews 487

1 First Steps with the TNC 320 41

1.1 Overview 42

1.2 Machine switch-on 42

Acknowledging the power interruption and moving to the reference points 42

1.3 Programming the first part 43

Selecting the correct operating mode 43
The most important TNC keys 43
Creating a new program/file management 44
Defining a workpiece blank 45
Program layout 46
Programming a simple contour 47
Creating a cycle program 50

1.4 Graphically testing the first part 52

Selecting the correct operating mode 52
Selecting the tool table for the test run 52
Choosing the program you want to test 53
Selecting the screen layout and the view 53
Starting the test run 54

1.5 Setting up tools 55

Selecting the correct operating mode 55
Preparing and measuring tools 55
The tool table TOOL.T 56
The pocket table TOOL_P.TCH 57

1.6 Workpiece setup 58

Selecting the correct operating mode 58
Clamping the workpiece 58
Workpiece alignment with 3-D touch probe 59
Datum setting with 3-D touch probe 60

1.7 Running the first program 61

Selecting the correct operating mode 61
Choosing the program you want to run 61
Start the program 61

2 Introduction....63

2.1 The TNC 320....64

Programming: HEIDENHAIN conversational and ISO formats....64
Compatibility....64

2.2 Visual display unit and operating panel....65

Display screen....65
Setting the screen layout....66
Control Panel....66

2.3 Modes of Operation....67

Manual Operation and El. Handwheel....67
Positioning with Manual Data Input....67
Programming....67
Test Run....68
Program Run, Full Sequence and Program Run, Single Block....68

2.4 Status displays....69

"General" status display....69
Additional status displays....70

2.5 Accessories: HEIDENHAIN 3-D Touch Probes and Electronic Handwheels....76

3-D touch probes....76
HR electronic handwheels....77

3 Programming: Fundamentals, file management....79

3.1 Fundamentals.... 80

Position encoders and reference marks.... 80
Reference system.... 80
Reference system on milling machines....81
Designation of the axes on milling machines....81
Polar coordinates....82
Absolute and incremental workpiece positions....83
Selecting the datum....84

3.2 Opening programs and entering.... 85

Organization of an NC program in HEIDENHAIN Conversational format....85
Define the blank: BLK FORM.... 85
Opening a new part program.... 86
Programming tool movements in conversational....87
Actual position capture....89
Editing a program....90
The TNC search function.... 93

3.3 File manager: Fundamentals....95

Files.... 95
Data Backup.... 97

3.4 Working with the file manager 98

Directories 98
Paths 98
Overview: Functions of the file manager 99
Calling the file manager 100
Selecting drives, directories and files 101
Creating a new directory 102
Creating a new file 102
Copying a single file 102
Copying files into another directory 103
Copying a table 104
Copying a directory 105
Choosing one of the last files selected 105
Deleting a file 106
Deleting a directory 106
Tagging files 107
Renaming a file 108
Sorting files 108
Additional functions 109
Data transfer to/from an external data medium 110
The TNC in a network 112
USB devices on the TNC 113

4 Programming: Programming aids 115

4.1 Screen keyboard 116

Enter the text with the screen keyboard 116

4.2 Adding comments 117

Application 117
Entering comments during programming 117
Inserting comments after program entry 117
Entering a comment in a separate block 117
Functions for editing of the comment 118

4.3 Structuring programs 119

Definition and applications 119
Displaying the program structure window / Changing the active window 119
Inserting a structuring block in the (left) program window 119
Selecting blocks in the program structure window 119

4.4 Calculator 120

Operation 120

4.5 Programming graphics 122

Generating / not generating graphics during programming 122
Generating a graphic for an existing program 122
Block number display ON/OFF 123
Erasing the graphic 123
Showing grid lines 123
Magnification or reduction of details 124

4.6 Error messages ... 125

Display of errors ... 125
Open the error window ... 125
Closing the error window ... 125
Detailed error messages ... 126
INTERNAL INFO soft key ... 126
Clearing errors ... 127
Error log ... 127
Keystroke log ... 128
Informational texts ... 129
Saving service files ... 129
Calling the TNCguide help system ... 130

4.7 TNCguide context-sensitive help system ... 131

Application ... 131
Working with the TNCguide ... 132
Downloading current help files ... 136

5 Programming: Tools 139

5.1 Entering tool-related data 140

Feed rate F 140
Spindle speed S 141

5.2 Tool data 142

Requirements for tool compensation 142
Tool number, tool name 142
Tool length L 142
Tool radius R 142
Delta values for lengths and radii 143
Entering tool data into the program 143
Enter tool data into the table 144
Importing tool tables 152
Pocket table for tool changer 153
Call tool data 156
Tool change 158
Tool usage test 161

5.3 Tool compensation 163

Introduction 163
Tool length compensation 163
Tool radius compensation 164

6 Programming: Programming contours ... 167

6.1 Tool movements ... 168

Path functions ... 168
FK free contour programming ... 168
Miscellaneous functions M ... 168
Subprograms and program section repeats ... 169
Programming with Q parameters ... 169

6.2 Fundamentals of Path Functions ... 170

Programming tool movements for workpiece machining ... 170

6.3 Approaching and departing a contour ... 174

Overview: Types of paths for contour approach and departure ... 174
Important positions for approach and departure ... 175
Approaching on a straight line with tangential connection: APPR LT ... 177
Approaching on a straight line perpendicular to the first contour point: APPR LN ... 177
Approaching on a circular path with tangential connection: APPR CT ... 178
Approaching on a circular path with tangential connection from a straight line to the contour: APPR LCT ... 179
Departing in a straight line with tangential connection: DEP LT ... 179
Departing in a straight line perpendicular to the last contour point: DEP LN ... 180
Departing on a circular path with tangential connection: DEP CT ... 181
Departing on a circular arc tangentially connecting the contour and a straight line: DEP LCT ... 181

6.4 Path contours - Cartesian coordinates ... 182

Overview of path functions ... 182
Straight line L ... 183
Inserting a chamfer between two straight lines ... 184
Corner rounding RND ... 185
Circle center CC ... 186
Circular path C around circle center CC ... 187
Circle CR with defined radius ... 188
Circle CT with tangential connection ... 190
Example: Linear movements and chamfers with Cartesian coordinates ... 191
Example: Circular movements with Cartesian coordinates ... 192
Example: Full circle with Cartesian coordinates ... 193

6.5 Path contours – Polar coordinates ... 194

Overview ... 194
Zero point for polar coordinates: pole CC ... 195
Straight line LP ... 195
Circular path CP around pole CC ... 196
Circle CTP with tangential connection ... 196
Helix ... 197
Example: Linear movement with polar coordinates ... 199
Example: Helix ... 200

6.6 Path contours – FK free contour programming ... 201

Fundamentals ... 201
FK programming graphics ... 203
Initiating the FK dialog ... 205
Pole for FK programming ... 205
Free straight line programming ... 206
Free circular path programming ... 207
Input options ... 208
Auxiliary points ... 211
Relative data ... 212
Example: FK programming 1 ... 214
Example: FK programming 2 ... 215
Example: FK programming 3 ... 216

7 Programming: Subprograms and program section repeats ... 219

7.1 Labeling Subprograms and Program Section Repeats ... 220

Label ... 220

7.2 Subprograms ... 221

Operating sequence ... 221
Programming notes ... 221
Programming a subprogram ... 221
Calling a subprogram ... 222

7.3 Program-section repeats ... 223

Label LBL ... 223
Operating sequence ... 223
Programming notes ... 223
Programming a program section repeat ... 223
Calling a program section repeat ... 224

7.4 Any desired program as subprogram ... 225

Operating sequence ... 225
Programming notes ... 225
Calling any program as a subprogram ... 226

7.5 Nesting ... 227

Types of nesting ... 227
Nesting depth ... 227
Subprogram within a subprogram ... 228
Repeating program section repeats ... 229
Repeating a subprogram ... 230

7.6 Programming examples ... 231

Example: Milling a contour in several infeeds ... 231
Example: Groups of holes ... 232
Example: Group of holes with several tools ... 233

8 Programming: Q Parameters....235

8.1 Principle and overview of functions.... 236

Programming notes....237
Calling Q parameter functions.... 238

8.2 Part families—Q parameters in place of numerical values.... 239

Application.... 239

8.3 Describing contours with mathematical functions.... 240

Application.... 240
Overview.... 240
Programming fundamental operations....241

8.4 Angle functions (trigonometry).... 242

Definitions....242
Programming trigonometric functions.... 242

8.5 Calculation of circles....243

Application.... 243

8.6 If-then decisions with Q parameters.... 244

Application.... 244
Unconditional jumps....244
Programming if-then decisions.... 244
Abbreviations used:....245

8.7 Checking and changing Q parameters....246

Procedure.... 246

8.8 Additional functions....248

Overview.... 248
FN 14: ERROR: Displaying error messages....249
FN 16: F-PRINT: Output of formatted texts and Q parameter values....253
FN 18: SYS-DATUM READ: Reading system data....257
FN 19: PLC: Transfer values to PLC.... 266
FN 20: WAIT FOR: NC and PLC synchronization.... 266
FN 29: PLC: Transfer values to the PLC....268
FN 37: EXPORT....268

8.9 Accessing tables with SQL commands ... 269

Introduction ... 269
A transaction ... 270
Programming SQL commands ... 272
Overview of the soft keys ... 272
SQL BIND ... 273
SQL SELECT ... 274
SQL FETCH ... 276
SQL UPDATE ... 277
SQL INSERT ... 277
SQL COMMIT ... 278
SQL ROLLBACK ... 278

8.10 Entering formulas directly ... 279

Entering formulas ... 279
Rules for formulas ... 281
Programming example ... 282

8.11 String parameters ... 283

String processing functions ... 283
Assigning string parameters ... 284
Chain-linking string parameters ... 284
Converting a numerical value to a string parameter ... 285
Copying a substring from a string parameter ... 286
Converting a string parameter to a numerical value ... 287
Checking a string parameter ... 288
Finding the length of a string parameter ... 289
Comparing alphabetic sequence ... 290
Reading machine parameters ... 291

8.12 Preassigned Q parameters....294

Values from the PLC: Q100 to Q107....294
Active tool radius: Q108....294
Tool axis: Q109....294
Spindle status: Q110....295
Coolant on/off: Q111....295
Overlap factor: Q112....295
Unit of measurement for dimensions in the program: Q113....295
Tool length: Q114....295
Coordinates after probing during program run....296
Deviation between actual value and nominal value during automatic tool measurement with the TT 130....296
Tilting the working plane with mathematical angles: rotary axis coordinates calculated by the TNC....296
Measurement results from touch probe cycles (see also User's Manual for Cycle Programming)....297

8.13 Programming examples....299

Example: Ellipse....299
Example: Concave cylinder machined with spherical cutter....301
Example: Convex sphere machined with end mill....303

9 Programming: Miscellaneous functions....305

9.1 Entering miscellaneous functions M and STOP....306

Fundamentals....306

9.2 M functions for program run inspection, spindle and coolant....307

Overview....307

9.3 Miscellaneous functions for coordinate data....308

Programming machine-referenced coordinates: M91/M92....308

Moving to positions in a non-tilted coordinate system with a tilted working plane: M130....310

9.4 Miscellaneous functions for path behavior....311

Machining small contour steps: M97....311

Machining open contour corners: M98....312

Feed rate factor for plunging movements: M103....313

Feed rate in millimeters per spindle revolution: M136....314

Feed rate for circular arcs: M109/M110/M111....315

Calculating the radius-compensated path in advance (LOOK AHEAD): M120....316

Superimposing handwheel positioning during program run: M118....318

Retraction from the contour in the tool-axis direction: M140....320

Suppressing touch probe monitoring: M141....321

Deleting basic rotation: M143....322

Automatically retract tool from the contour at an NC stop: M148....323

Rounding corners: M197....324

10 Programming: Special functions ... 325

10.1 Overview of special functions ... 326

Main menu for SPEC FCT special functions ... 326
Program defaults menu ... 326
Functions for contour and point machining menu ... 327
Menu of various conversational functions ... 328

10.2 Working with the Parallel Axes U, V and W ... 329

Overview ... 329
FUNCTION PARAXCOMP DISPLAY ... 330
FUNCTION PARAXCOMP MOVE ... 330
FUNCTION PARAXCOMP OFF ... 331
FUNCTION PARAXMODE ... 331
FUNCTION PARAXMODE OFF ... 332

10.3 File functions ... 333

Application ... 333
Defining file functions ... 333

10.4 Definition of a datum shift ... 334

Overview ... 334
TRANS DATUM AXIS ... 334
TRANS DATUM TABLE ... 335
TRANS DATUM RESET ... 336

10.5 Creating Text Files ... 337

Application ... 337
Opening and exiting text files ... 337
Editing texts ... 338
Deleting and re-inserting characters, words and lines ... 338
Editing text blocks ... 339
Finding text sections ... 340

10.6 Freely definable tables....341

Fundamentals....341
Creating a freely definable table....341
Editing the table format....342
Switching between table and form view....343
FN 26: TAPOPEN: Open a freely definable table....344
FN 27: TAPWRITE: Write to a freely definable table....345
FN 28: TAPREAD: Read from a freely definable table....346

11 Programming: Multiple Axis Machining 347

11.1 Functions for multiple axis machining 348

11.2 The PLANE Function: Tilting the Working Plane (Software Option 1) 349

Introduction 349
Defining the PLANE function 351
Position display 351
Resetting the PLANE function 352
Defining the working plane with the spatial angle: PLANE SPATIAL 353
Defining the working plane with the projection angle: PLANE PROJECTED 355
Defining the working plane with the Euler angle: PLANE EULER 356
Defining the working plane with two vectors: PLANE VECTOR 358
Defining the working plane via three points: PLANE POINTS 360
Defining the working plane via a single incremental spatial angle: PLANE SPATIAL 362
Tilting the working plane through axis angle: PLANE AXIAL (FCL 3 function) 363
Specifying the positioning behavior of the PLANE function 365

11.3 Miscellaneous functions for rotary axes 370

Feed rate in mm/min on rotary axes A, B, C: M116 (software option 1) 370
Shortest-path traverse of rotary axes: M126 371
Reducing display of a rotary axis to a value less than 360°: M94 372
Selecting tilting axes: M138 373

12 Manual operation and setup....375

12.1 Switch-on, switch-off....376

Switch-on....376
Switch-off....378

12.2 Moving the machine axes....379

Note....379
Moving the axis with the machine axis direction buttons....379
Incremental jog positioning....379
Traverse with electronic handwheels....380

12.3 Spindle speed S, feed rate F and miscellaneous function M....390

Application....390
Entering values....390
Adjusting spindle speed and feed rate....391

12.4 Datum setting without a 3-D touch probe....392

Note....392
Preparation....392
Workpiece presetting with axis keys....392
Datum management with the preset table....393

12.5 Using 3-D touch probes....399

Overview....399
Functions in touch probe cycles....400
Selecting touch probe cycles....402
Recording measured values from the touch-probe cycles....403
Writing measured values from the touch probe cycles in a datum table....404
Writing measured values from the touch probe cycles in the preset table....405

12.6 Calibrating a 3-D touch trigger probe....406

Introduction....406
Calibrating the effective length....407
Calibrating the effective radius and compensating center misalignment....408
Displaying calibration values....410

12.7 Compensating workpiece misalignment with 3-D touch probe....411

Introduction....411
Identifying basic rotation....412
Saving a basic rotation in the preset table....412
Compensation of workpiece misalignment by rotating the table....412
Displaying a basic rotation....413
Canceling a basic rotation....413

12.8 Datum Setting with 3-D Touch Probe....414

Overview....414
Datum setting in any axis....414
Corner as datum....415
Circle center as datum....417
Setting a center line as datum....419
Measuring workpieces with a 3-D touch probe....420
Using touch probe functions with mechanical probes or measuring dials....423

12.9 Tilting the working plane (software option 1)....424

Application, function....424
Traversing reference points in tilted axes....426
Position display in a tilted system....426
Limitations on working with the tilting function....426
To activate manual tilting:....427
Setting the current tool-axis direction as the active machining direction....428
Setting the datum in a tilted coordinate system....429

13 Positioning with Manual Data Input.....431

13.1 Programming and executing simple machining operations.....432

Positioning with manual data input (MDI)..... 432

Protecting and erasing programs in $MDI.....435

14 Test run and program run ... 437

14.1 Graphics ... 438

Application ... 438
Speed of the Setting test runs ... 439
Overview: Display modes ... 440
Plan view ... 441
Projection in three planes ... 441
3-D view ... 442
Magnifying details ... 444
Repeating graphic simulation ... 445
Tool display ... 445
Measurement of machining time ... 446

14.2 Showing the workpiece blank in the working space ... 447

Application ... 447

14.3 Functions for program display ... 448

Overview ... 448

14.4 Test Run ... 449

Application ... 449

14.5 Program run ... 452

Application ... 452
Running a part program ... 453
Interrupt machining ... 454
Moving the machine axes during an interruption ... 455
Resuming program run after an interruption ... 455
Any entry into program (mid-program startup) ... 457
Returning to the contour ... 459

14.6 Automatic program start ... 460

Application ... 460

14.7 Optional block skip ... 461

Application ... 461
Inserting the "/" character ... 461
Erasing the "/" character ... 461

14.8 Optional program-run interruption.....462

Application.....462

15 MOD functions....463

15.1 MOD function.... 464

Selecting MOD functions....464
Changing the settings.... 464
Exiting MOD functions....464
Overview of MOD functions....465

15.2 Position Display Types....466

Application.... 466

15.3 Unit of Measurement....467

Application.... 467

15.4 Displaying operating times.... 467

Application.... 467

15.5 Software numbers....468

Application.... 468

15.6 Entering the code number.... 468

Application.... 468

15.7 External access.... 469

Application.... 469

15.8 Setting up data interfaces....470

Serial interfaces on the TNC 320.... 470
Application.... 470
Setting the RS-232 interface....470
Setting the BAUD RATE (baudRate).... 470
Setting the protocol (protocol).... 471
Setting data bits (dataBits)....471
Check parity (parity).... 471
Setting the stop bits (stopBits)....471
Setting handshaking (flowControl).... 472
File system for file operations (fileSystem).... 472
Settings for data transfer with the TNCserver PC software....472
Setting the operating mode of the external device (fileSystem).... 473
Data transfer software.... 474

15.9 Ethernet interface....476

Introduction....476
Connection options....476
Connecting the Control to the Network....477

15.10 Configure HR 550 FS wireless handwheel....483

Application....483
Assigning the handwheel to a specific handwheel holder....483
Setting the transmission channel....484
Selecting the transmitter power....484
Statistical data....485

16 Tables and overviews....487

16.1 Machine-specific user parameters....488

Application....488

16.2 Connector pin layout and connection cables for data interfaces....498

RS-232-C/V.24 interface for HEIDENHAIN devices....498
Non-HEIDENHAIN devices....500
Ethernet interface RJ45 socket....500

16.3 Technical Information....501

16.4 Overview tables....507

Fixed cycles....507
Miscellaneous functions....508

16.5 Functions of the TNC 320 and the iTNC 530 compared....510

Comparison: Specifications....510
Comparison: Data interfaces....510
Comparison: Accessories....511
Comparison: PC software....511
Comparison: Machine-specific functions....512
Comparison: User functions....512
Comparison: Cycles....519
Comparison: Miscellaneous functions....521
Comparison: Touch probe cycles in the Manual Operation and El. Handwheel modes....523
Comparison: Touch probe cycles for automatic workpiece inspection....523
Comparison: Differences in programming....525
Comparison: Differences in Test Run, functionality....528
Comparison: Differences in Test Run, operation....528
Comparison: Differences in Manual Operation, functionality....528
Comparison: Differences in Manual Operation, operation....530
Comparison: Differences in Program Run, operation....530
Comparison: Differences in Program Run, traverse movements....531
Comparison: Differences in MDI operation....535
Comparison: Differences in programming station....536

1

First Steps with the TNC 320

1.1 Overview

This chapter is intended to help TNC beginners quickly learn to handle the most important procedures. For more information on a respective topic, see the section referred to in the text.

The following topics are included in this chapter:

- Machine switch-on
- Programming the first part
- Graphically testing the first part
- Setting up tools
- Workpiece setup
- Running the first program

1.2 Machine switch-on

Acknowledging the power interruption and moving to the reference points

Switch-on and crossing over the reference points can vary depending on the machine tool. Refer to your machine manual.

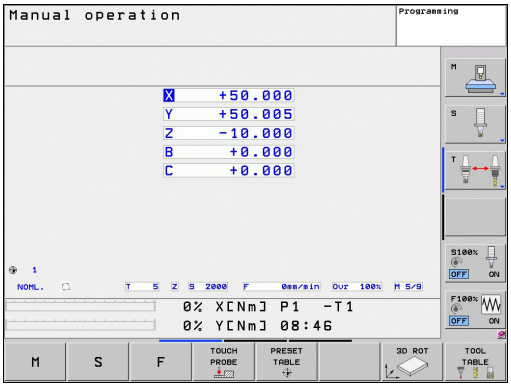

- Switch on the power supply for control and machine. The TNC starts the operating system. This process may take several minutes. Then the TNC will display the message "Power interrupted" in the screen header
- Press the CE key: The TNC compiles the PLC program
- Switch on the control voltage: The TNC checks operation of the emergency stop circuit and goes into the reference run mode
- Cross the reference points manually in the displayed sequence: For each axis press the machine START button. If you have absolute linear and angle encoders on your machine there is no need for a reference run

The TNC is now ready for operation in the **Manual Operation** mode.

Further information on this topic

- Traversing the reference marks: See "Switch-on", page 376
- Operating modes: See "Programming", page 67

1.3 Programming the first part

Selecting the correct operating mode

You can write programs only in Programming mode:

- Press the Programming operating mode key: The TNC switches to **Programming mode**

Further information on this topic

- Operating modes: See "Programming", page 67

The most important TNC keys

Functions for conversational guidance	Key
Confirm entry and activate the next dialog prompt	ENT
Ignore the dialog question	NO ENT
End the dialog immediately	END
Abort dialog, discard entries	DEL
Soft keys on the screen with which you select functions appropriate to the active state	

Further information on this topic

- Writing and editing programs: See "Editing a program", page 90
- Overview of keys: See "Controls of the TNC", page 2

Creating a new program/file management

PGM MGT

- Press the PGM MGT key: The TNC opens the file manager. The file management of the TNC is arranged much like the file management on a PC with the Windows Explorer. The file management enables you to manipulate data on the TNC hard disk
- Use the arrow keys to select the folder in which you want to open the new file
- Enter a file name with the extension **.H**: The TNC then automatically opens a program and asks for the unit of measure for the new program
- To select the unit of measure, press the MM or INCH soft key: The TNC automatically starts the workpiece blank definition (See "Defining a workpiece blank", page 45)

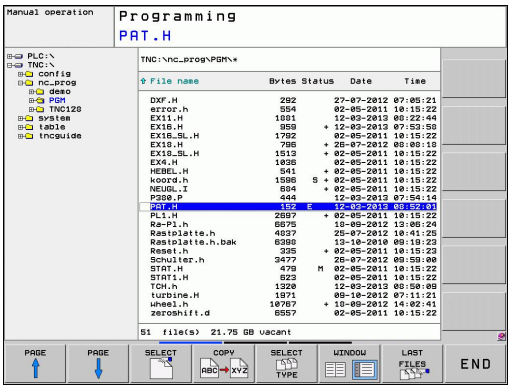

The TNC automatically generates the first and last blocks of the program. Afterwards you can no longer change these blocks.

Further information on this topic

- File management: See "Working with the file manager", page 98
- Creating a new program: See "Opening programs and entering", page 85

Defining a workpiece blank

Immediately after you have created a new program, the TNC starts the dialog for entering the workpiece blank definition. Always define the workpiece blank as a cuboid by entering the MIN and MAX points, each with reference to the selected reference point.

After you have created a new program, the TNC automatically initiates the workpiece blank definition and asks for the required data:

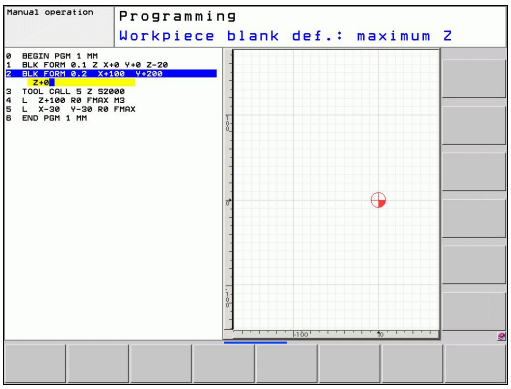

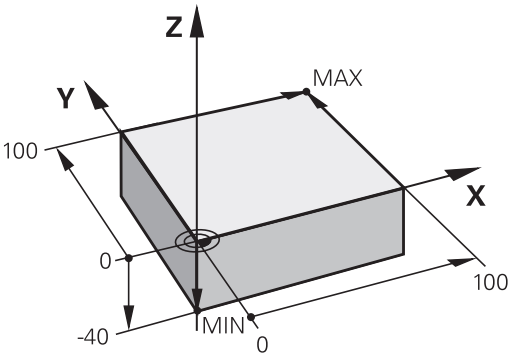

- **Working plane in graphic: XY?**: Enter the active spindle axis. Z is saved as default setting. Accept with the ENT key
- **Workpiece blank def.: minimum X**: Smallest X coordinate of the workpiece blank with respect to the reference point, e.g. 0. Confirm with the ENT key
- **Workpiece blank def.: minimum Y**: Smallest Y coordinate of the workpiece blank with respect to the reference point, e.g. 0. Confirm with the ENT key
- **Workpiece blank def.: minimum Z**: Smallest Z coordinate of the workpiece blank with respect to the reference point, e.g. –40. Confirm with the ENT key
- **Workpiece blank def.: maximum X**: Largest X coordinate of the workpiece blank with respect to the reference point, e.g. 100. Confirm with the ENT key
- **Workpiece blank def.: maximum Y**: Largest Y coordinate of the workpiece blank with respect to the reference point, e.g. 100. Confirm with the ENT key
- **Workpiece blank def.: maximum Z**: Largest Z coordinate of the workpiece blank with respect to the reference point, e.g. 0. Confirm with the ENT key. The TNC concludes the dialog

Example NC blocks

```
0 BEGIN PGM NEW MM
1 BLK FORM 0.1 Z X+0 Y+0 Z-40
2 BLK FORM 0.2 X+100 Y+100 Z+0
3 END PGM NEW MM
```

Further information on this topic

- Defining the workpiece blank: page 86

Program layout

NC programs should be arranged consistently in a similar manner. This makes it easier to find your place, accelerates programming and reduces errors.

Recommended program layout for simple, conventional contour machining

1 Call tool, define tool axis
2 Retract the tool
3 Pre-position the tool in the working plane near the contour starting point
4 In the tool axis, position the tool above the workpiece, or preposition immediately to workpiece depth. If required, switch on the spindle/coolant
5 Contour approach
6 Contour machining
7 Contour departure
8 Retract the tool, end program

Further information on this topic

- Contour programming: See "Tool movements", page 168

Layout of contour machining programs

```
0 BEGIN PGM BSPCONT MM
1 BLK FORM 0.1 Z X... Y... Z...
2 BLK FORM 0.2 X... Y... Z...
3 TOOL CALL 5 Z S5000
4 L Z+250 R0 FMAX
5 L X... Y... R0 FMAX
6 L Z+10 R0 F3000 M13
7 APPR ... RL F500
...
16 DEP ... X... Y... F3000 M9
17 L Z+250 R0 FMAX M2
18 END PGM BSPCONT MM
```

Recommended program layout for simple cycle programs

1 Call tool, define tool axis
2 Retract the tool
3 Define the machining positions
4 Define the fixed cycle
5 Call the cycle, switch on the spindle/coolant
6 Retract the tool, end program

Further information on this topic

- Cycle programming: See User's Manual for Cycles

Cycle program layout

```
0 BEGIN PGM BSBCYC MM
1 BLK FORM 0.1 Z X... Y... Z...
2 BLK FORM 0.2 X... Y... Z...
3 TOOL CALL 5 Z S5000
4 L Z+250 R0 FMAX
5 PATTERN DEF POS1( X... Y... Z... ) ...
6 CYCL DEF...
7 CYCL CALL PAT FMAX M13
8 L Z+250 R0 FMAX M2
9 END PGM BSBCYC MM
```

Programming a simple contour

The contour shown to the right is to be milled once to a depth of 5 mm. You have already defined the workpiece blank. After you have initiated a dialog through a function key, enter all the data requested by the TNC in the screen header.

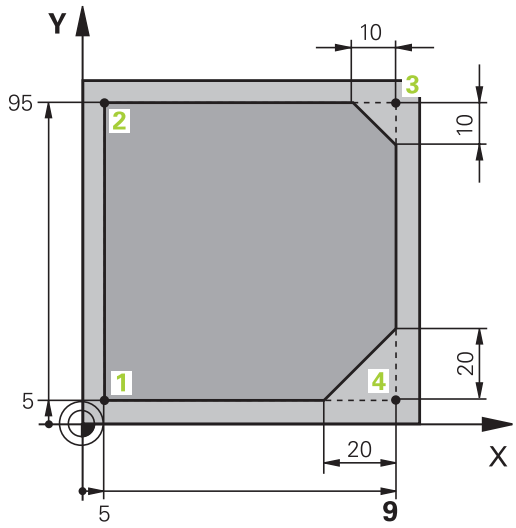

TOOL CALL

- Call the tool: Enter the tool data. Confirm each of your entries with the ENT key. Do not forget the tool axis

- Retract the tool: Press the orange axis key Z in order to get clear in the tool axis, and enter the value for the position to be approached, e.g. 250. Confirm with the ENT key
- Confirm **Radius comp.: RL/RR/no comp?** by pressing the ENT key: Do not activate the radius compensation
- Confirm **Feed rate F=?** with the ENT key: Move at rapid traverse (**FMAX**)
- Confirm the **Miscellaneous function M?** with theEND key: The TNC saves the entered positioning block

- Preposition the tool in the working plane: Press the orange X axis key and enter the value for the position to be approached, e.g. –20
- Press the orange Y axis key and enter the value for the position to be approached, e.g. –20. Confirm with the ENT key
- Confirm **Radius comp.: RL/RR/no comp?** by pressing the ENT key: Do not activate the radius compensation
- Confirm **Feed rate F=?** with the ENT key: Move at rapid traverse (**FMAX**)
- Confirm the **Miscellaneous function M?** with the END key: The TNC saves the entered positioning block

- Move the tool to workpiece depth: Press the orange axis key and enter the value for the position to be approached, e.g. –5. Confirm with the ENT key
- Confirm **Radius comp.: RL/RR/no comp?** by pressing the ENT key: Do not activate the radius compensation
- **Feed rate F=?** Enter the positioning feed rate, e.g. 3000 mm/min and confirm with the ENT key
- **Miscellaneous function M?** Switch on the spindle and coolant, e.g. **M13**. Confirm with the END key: The TNC saves the entered positioning block

APPR DEP

- Move to the contour: Press the APPR/DEP key: The TNC shows a soft-key row with approach and departure functions

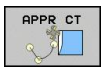

- Select the approach function **APPR CT**: Enter the coordinates of the contour starting point **1** in X and Y, e.g. 5/5. Confirm with the ENT key
- **Center angle?** Enter the approach angle, e.g. 90°, and confirm with the ENT key
- **Circle radius?** Enter the approach radius, e.g. 8 mm, and confirm with the ENT key
- Confirm the **Radius comp.: RL/RR/no comp?** with the RL soft key: Activate the radius compensation to the left of the programmed contour
- **Feed rate F=?** Enter the machining feed rate, e.g. 700 mm/min, and confirm your entry with the END key

- Machine the contour and move to contour point **2**: You only need to enter the information that changes. In other words, enter only the Y coordinate 95 and save your entry with the END key

- Move to contour point **3**: Enter the X coordinate 95 and save your entry with the END key

- Define the chamfer at contour point **3**: Enter the chamfer width 10 mm and save with the END key

- Move to contour point **4**: Enter the Y coordinate 5 and save your entry with the END key

- Define the chamfer at contour point **4**: Enter the chamfer width 20 mm and save with the END key

- Move to contour point **1**: Enter the X coordinate 5 and save your entry with the END key

- Depart the contour

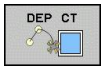

- Select the departure function DEP CT
- **Center angle?** Enter the departure angle, e.g. 90°, and confirm with the ENT key
- **Circle radius?** Enter the departure radius, e.g. 8 mm, and confirm with the ENT key
- **Feed rate F=?** Enter the positioning feed rate, e.g. 3000 mm/min and confirm with the ENT key
- **Miscellaneous function M?** Switch off the coolant, e.g. **M9**, with the END key: The TNC saves the entered positioning block

- Enter Retract the tool: Press the orange axis key Z in order to get clear in the tool axis, and enter the value for the position to be approached, e.g. 250. Confirm with the ENT key
- Confirm **Radius comp.: RL/RR/no comp?** by pressing the ENT key: Do not activate the radius compensation
- Confirm **Feed rate F=?** with the ENT key: Move at rapid traverse (**FMAX**)
- **MISCELLANEOUS FUNCTION M? ENTER M2** to end the program and confirm with the END key: The TNC saves the entered positioning block

Further information on this topic

- **Complete example with NC blocks**: See "Example: Linear movements and chamfers with Cartesian coordinates", page 191
- Creating a new program: See "Opening programs and entering", page 85
- Approaching/departing contours: See " Approaching and departing a contour", page 174
- Programming contours: See "Overview of path functions", page 182
- Programmable feed rates: See "Mögliche Vorschubeingaben"
- Tool radius compensation: See "Tool radius compensation", page 164
- Miscellaneous functions (M): See "M functions for program run inspection, spindle and coolant ", page 307

Creating a cycle program

The holes (depth of 20 mm) shown in the figure at right are to be drilled with a standard drilling cycle. You have already defined the workpiece blank.

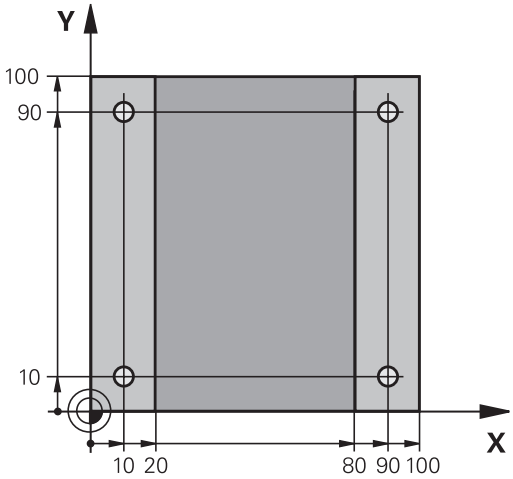

TOOL CALL

- Call the tool: Enter the tool data. Confirm each of your entries with the ENT KEY. DO NOT FORGET THE TOOL AXIS

- Retract the tool: Press the orange axis key Z in order to get clear in the tool axis, and enter the value for the position to be approached, e.g. 250. Confirm with the ENT key

- Confirm **Radius comp.: RL/RR/no comp?** by pressing the ENT key: Do not activate the radius compensation

- Confirm **Feed rate F=?** with the ENT key: Move at rapid traverse (**FMAX**)

- Confirm the **Miscellaneous function M?** with theEND key: The TNC saves the entered positioning block

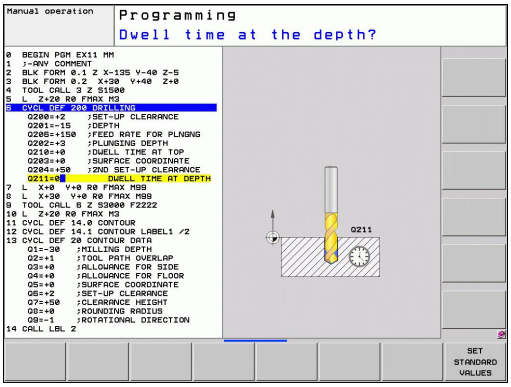

CYCL DEF

- Call the cycle menu

DRILLING/ THREAD

- Display the drilling cycles

200

- Select the standard drilling cycle 200: The TNC starts the dialog for cycle definition. Enter all parameters requested by the TNC step by step and conclude each entry with the ENT key. In the screen to the right, the TNC also displays a graphic showing the respective cycle parameter

SPEC FCT

- Call the menu for special functions

CONTOUR + POINT MACHINING

- Display the functions for point machining

PATTERN DEF

- Select the pattern definition

POINT

- Select point entry: Enter the coordinates of the 4 points and confirm each with the ENT key. After entering the fourth point, save the block with the END key

CYCL CALL

- Display the menu for defining the cycle call

CYCLE CALL PAT

- Run the drilling cycle on the defined pattern:

- Confirm **Feed rate F=?** with the ENT key: Move at rapid traverse (**FMAX**)

- **Miscellaneous function M?** Switch on the spindle and coolant, e.g. **M13**. Confirm with the END key: The TNC saves the entered positioning block

- Enter Retract the tool: Press the orange axis key Z in order to get clear in the tool axis, and enter the value for the position to be approached, e.g. 250. Confirm with the ENT key
- Confirm **Radius comp.: RL/RR/no comp?** by pressing the ENT key: Do not activate the radius compensation
- Confirm **Feed rate F=?** with the ENT key: Move at rapid traverse (**FMAX**)
- **Miscellaneous function M? Enter M2** to end the program and confirm with the END key: The TNC saves the entered positioning block

Example NC blocks

0 BEGIN PGM C200 MM	
1 BLK FORM 0.1 Z X+0 Y+0 Z-40	Definition of workpiece blank
2 BLK FORM 0.2 X+100 Y+100 Z+0	
3 TOOL CALL 5 Z S4500	Tool call
4 L Z+250 R0 FMAX	Retract the tool
5 PATTERN DEF POS1 (X+10 Y+10 Z+0) POS2 (X+10 Y+90 Z+0) POS3 (X+90 Y+90 Z+0) POS4 (X+90 Y+10 Z+0)	Define the machining positions
6 CYCL DEF 200 DRILLING	Define the cycle
Q200=2 ;SET-UP CLEARANCE	
Q201=-20 ;DEPTH	
Q206=250 ;FEED RATE FOR PLNGNG	
Q202=5 ;PLUNGING DEPTH	
Q210=0 ;DWELL TIME AT TOP	
Q203=-10 ;SURFACE COORDINATE	
Q204=20 ;2ND SET-UP CLEARANCE	
Q211=0.2 ;DWELL TIME AT BOTTOM	
7 CYCL CALL PAT FMAX M13	Spindle and coolant on, call the cycle
8 L Z+250 R0 FMAX M2	Retract the tool, end program
9 END PGM C200 MM	

Further information on this topic

- Creating a new program: See "Opening programs and entering", page 85
- Cycle programming: See User’s Manual for Cycles

1.4 Graphically testing the first part

Selecting the correct operating mode

You can test programs only in the Test Run mode:

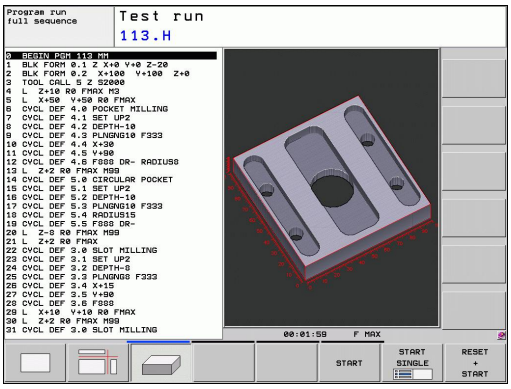

- Press the **Test Run** operating mode key: the TNC switches to that mode

Further information on this topic

- Operating modes of the TNC: See "Modes of Operation", page 67
- Testing programs: See "Test Run", page 449

Selecting the tool table for the test run

You only need to execute this step if you have not activated a tool table in the Test Run mode.

- Press the PGM MGT key: The TNC opens the file manager

- Press the SELECT TYPE soft key: The TNC shows a soft-key menu for selection of the file type to be displayed

- Press the SHOW ALL soft key: The TNC shows all saved files in the right window

- Move the highlight to the left onto the directories

- Move the highlight to the **TNC:** directory

- Move the highlight to the right onto the files

- Move the highlight to the file TOOL.T (active tool table) and load with the ENT key: TOOL.T receives the status **S** and is therefore active for the test run

- Press the END key: Exit the file manager

Further information on this topic

- Tool management: See "Enter tool data into the table", page 144
- Testing programs: See "Test Run", page 449

Choosing the program you want to test

- Press the PGM MGT key: The TNC opens the file manager

- Press the LAST FILES soft key: The TNC opens a pop-up window with the most recently selected files
- Use the arrow keys to select the program that you want to test. Load with the ENT key

Further information on this topic

- Selecting a program: See "Working with the file manager", page 98

Selecting the screen layout and the view

- Press the key for selecting the screen layout. The TNC shows all available alternatives in the soft-key row

- Press the PROGRAM + GRAPHICS soft key: In the left half of the screen the TNC shows the program; in the right half it shows the workpiece blank
- Select the desired view via soft key

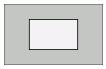

- Plan view

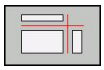

- Projection in three planes

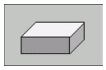

- 3-D view

Further information on this topic

- Graphic functions: See "Graphics ", page 438
- Running a test run: See "Test Run", page 449

Starting the test run

- Press the RESET + START soft key: The TNC simulates the active program up to a programmed break or to the program end
- While the simulation is running, you can use the soft keys to change views

- Press the STOP soft key: The TNC interrupts the test run

- Press the START soft key: The TNC resumes the test run after a break

Further information on this topic

- Running a test run: See "Test Run", page 449
- Graphic functions: See "Graphics ", page 438
- Adjusting the test speed: See "Speed of the Setting test runs", page 439

1.5 Setting up tools

Selecting the correct operating mode

Tools are set up in the **Manual Operation** mode:

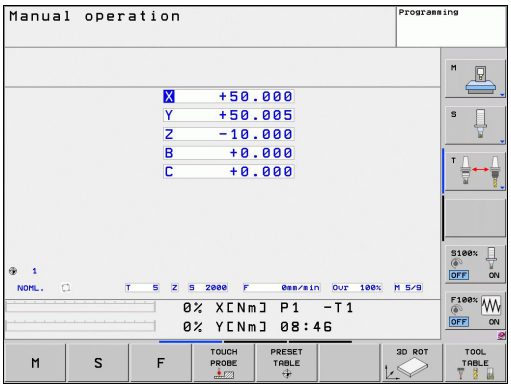

- Press the **Manual Operation** operating mode key: the TNC switches to that mode

Further information on this topic

- Operating modes of the TNC: See "Modes of Operation", page 67

Preparing and measuring tools

- Clamp the required tools in their chucks
- When measuring with an external tool presetter: Measure the tools, note down the length and radius, or transfer them directly to the machine through a transfer program
- When measuring on the machine: Place the tools into the tool changer page 57

The tool table TOOL.T

In the tool table TOOL.T (permanently saved under **TNC:\TABLE**), save the tool data such as length and radius, but also further tool-specific information that the TNC needs to perform its functions.

To enter tool data in the tool table TOOL.T, proceed as follows:

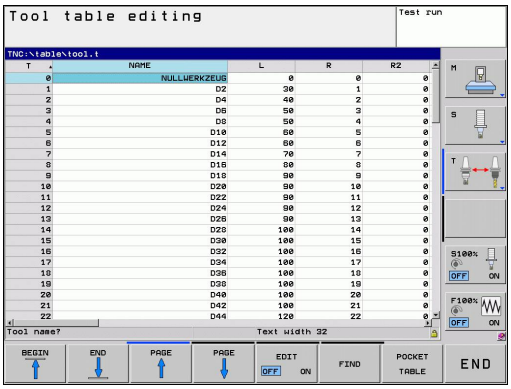

- Display the tool table
- Edit the tool table: Set the EDITING soft key to ON
- With the upward or downward arrow keys you can select the tool number that you want to edit
- With the rightward or leftward arrow keys you can select the tool data that you want to edit
- To exit the tool table, press the END key

Further information on this topic

- Operating modes of the TNC: See "Modes of Operation", page 67
- Working with the tool table: See "Enter tool data into the table", page 144

The pocket table TOOL_P.TCH

The function of the pocket table depends on the machine. Refer to your machine manual.

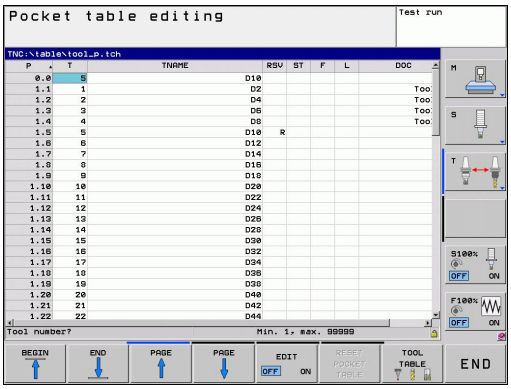

In the pocket table TOOL_P.TCH (permanently saved under **TNC:\TABLE**) you specify which tools your tool magazine contains.

To enter data in the pocket table TOOL_P.TCH, proceed as follows:

- Display the tool table

- Display the pocket table
- Edit the pocket table: Set the EDITING soft key to ON
- With the upward or downward arrow keys you can select the pocket number that you want to edit
- With the rightward or leftward arrow keys you can select the data that you want to edit
- To leave the pocket table, press the END key

Further information on this topic

- Operating modes of the TNC: See "Modes of Operation", page 67
- Working with the pocket table: See "Pocket table for tool changer", page 153

1.6 Workpiece setup

Selecting the correct operating mode

Workpieces are set up in the **Manual Operation** or **Electronic Handwheel** mode

- Press the **Manual Operation** operating mode key: the TNC switches to that mode

Further information on this topic

- Manual Operation mode: See "Moving the machine axes", page 379

Clamping the workpiece

Mount the workpiece with a fixture on the machine table. If you have a 3-D touch probe on your machine, then you do not need to clamp the workpiece parallel to the axes.

If you do not have a 3-D touch probe available, you have to align the workpiece so that it is fixed with its edges parallel to the machine axes.

Workpiece alignment with 3-D touch probe

- Insert the 3-D touch probe: In the Manual Data Input (MDI) operating mode, run a **TOOL CALL** block containing the tool axis, and then return to the **Manual Operation** mode (in MDI mode you can run an individual NC block independently of the others)

- Select the probing functions: The TNC displays the available functions in the soft-key row

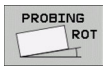

- Measure the basic rotation: The TNC displays the basic rotation menu. To identify the basic rotation, probe two points on a straight surface of the workpiece
- Use the axis-direction keys to preposition the touch probe to a position near the first contact point
- Select the probing direction via soft key
- Press NC start: The touch probe moves in the defined direction until it contacts the workpiece and then automatically returns to its starting point
- Use the axis-direction keys to preposition the touch probe to a position near the second contact point
- Press NC start: The touch probe moves in the defined direction until it contacts the workpiece and then automatically returns to its starting point
- Then the TNC shows the measured basic rotation
- Press SET BASIC ROTATION soft key to select the displayed value as the active rotation. Press the END soft key to exit the menu

Further information on this topic

- MDI operating mode: See "Programming and executing simple machining operations", page 432
- Workpiece alignment: See "Compensating workpiece misalignment with 3-D touch probe ", page 411

Datum setting with 3-D touch probe

- Insert the 3-D touch probe: In the MDI mode, run a **TOOL CALL** block containing the tool axis and then return to the **Manual Operation** mode

- Select the probing functions: The TNC displays the available functions in the soft-key row

- Set the datum at a workpiece corner, for example
- Position the touch probe near the first touch point on the first workpiece edge
- Select the probing direction via soft key
- Press NC start: The touch probe moves in the defined direction until it contacts the workpiece and then automatically returns to its starting point
- Use the axis-direction keys to pre-position the touch probe to a position near the second touch point on the first workpiece edge
- Press NC start: The touch probe moves in the defined direction until it contacts the workpiece and then automatically returns to its starting point
- Use the axis-direction keys to pre-position the touch probe to a position near the first touch point on the second workpiece edge
- Select the probing direction via soft key
- Press NC start: The touch probe moves in the defined direction until it contacts the workpiece and then automatically returns to its starting point
- Use the axis-direction keys to pre-position the touch probe to a position near the second touch point on the second workpiece edge
- Press NC start: The touch probe moves in the defined direction until it contacts the workpiece and then automatically returns to its starting point
- Then the TNC shows the coordinates of the measured corner point

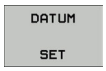

- Set to 0: Press the SET DATUM soft key
- Press the END soft key to close the menu

Further information on this topic

- Datum setting: See "Datum Setting with 3-D Touch Probe ", page 414

1.7 Running the first program

Selecting the correct operating mode

You can run programs either in the Single Block or the Full Sequence mode:

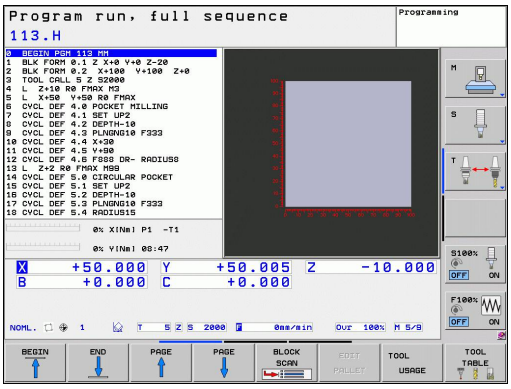

- Press the operating mode key: The TNC goes into the **Program Run, Single Block** mode and the TNC executes the program block by block. You have to confirm each block with the NC start key
- Press the **Program Run, Full Sequence** operating mode key: The TNC switches to that mode and runs the program after NC start up to a program interruption or to the end of the program

Further information on this topic

- Operating modes of the TNC: See "Modes of Operation", page 67
- Running programs: See "Program run", page 452

Choosing the program you want to run

PGM MGT

- Press the PGM MGT key: The TNC opens the file manager

LAST FILES

- Press the LAST FILES soft key: The TNC opens a pop-up window with the most recently selected files
- If desired, use the arrow keys to select the program that you want to run. Load with the ENT key

Further information on this topic

- File management: See "Working with the file manager", page 98

Start the program

I

- Press the NC start key: The TNC runs the active program

Further information on this topic

- Running programs: See "Program run", page 452

2

Introduction

2.1 The TNC 320

HEIDENHAIN TNC controls are workshop-oriented contouring controls that enable you to program conventional machining operations right at the machine in an easy-to-use conversational programming language. They are designed for milling and drilling machines, as well as machining centers, with up to 5 axes. You can also change the angular position of the spindle under program control.

Keyboard and screen layout are clearly arranged in such a way that the functions are fast and easy to use.

Programming: HEIDENHAIN conversational and ISO formats

The HEIDENHAIN conversational programming format is an especially easy method of writing programs. Interactive graphics illustrate the individual machining steps for programming the contour. If a production drawing is not dimensioned for NC, the FK free contour programming feature performs the necessary calculations automatically. Workpiece machining can be graphically simulated either during or before actual machining.

It is also possible to program the TNCs in ISO format or DNC mode.

You can also enter and test one program while the control is running another.

Compatibility

Machining programs created on HEIDENHAIN contouring controls (starting from the TNC 150 B) may not always run on the TNC 320. If NC blocks contain invalid elements, the TNC will mark them as ERROR blocks when the file is opened.

⇨ See "Functions of the and the iTNC 530 compared". Please also note the detailed description of the differences between the iTNC 530 and the TNC 320

2.2 Visual display unit and operating panel

Display screen

The TNC is available either as a compact version or with a separate display unit and operating panel. Both TNC variants come with a 15-inch TFT color flat-panel display.

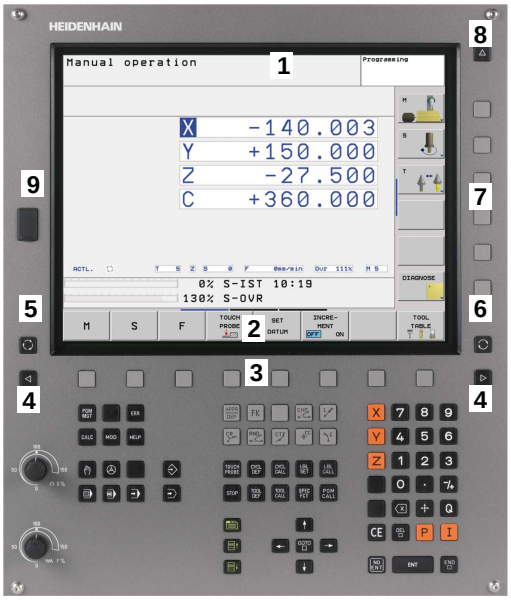

1 Header

When the TNC is on, the selected operating modes are shown in the screen header: the machining mode at the left and the programming mode at right. The currently active operating mode is displayed in the larger box, where the dialog prompts and TNC messages also appear (unless the TNC is showing only graphics).

2 Soft keys

In the footer the TNC indicates additional functions in a soft-key row. You can select these functions by pressing the keys immediately below them. The lines immediately above the soft-key row indicate the number of soft-key rows that can be called with the black arrow keys to the right and left. The bar representing the active soft-key row is highlighted

3 Soft-key selection keys

4 Shifting between soft-key rows

5 Setting the screen layout

6 Shift key for switchover between machining and programming modes

7 Soft-key selection keys for machine tool builders

8 Switching the soft-key rows for machine tool builders

9 USB connection

Setting the screen layout

You select the screen layout yourself: In the Programming mode of operation, for example, you can have the TNC show program blocks in the left window while the right window displays programming graphics. You could also display the program structure in the right window instead, or display only program blocks in one large window. The available screen windows depend on the selected operating mode.

To change the screen layout:

- Press the screen layout key: The soft-key row shows the available layout options, see "Operating modes", page 62

- Select the desired screen layout

Control Panel

The TNC 320 is delivered with an integrated keyboard.

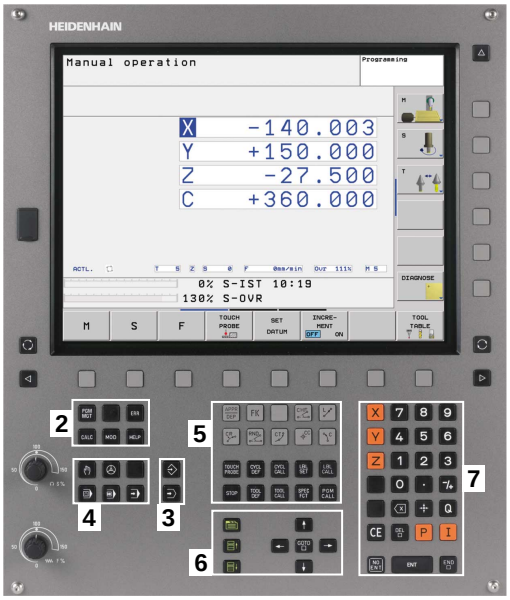

1 Alphabetic keyboard for entering texts and file names, and for ISO programming.

2
- File management
- Calculator
- MOD function
- HELP function

3 Programming modes

4 Machine operating modes

5 Initiation of programming dialogs

6 Navigation keys and GOTO jump command

7 Numerical input and axis selection

The functions of the individual keys are described on the inside front cover.

Some machine manufacturers do not use the standard operating panel from HEIDENHAIN. Refer to your machine manual.

Machine panel buttons, e.g. NC START or NC STOP, are described in the manual for your machine tool.

2.3 Modes of Operation

Manual Operation and El. Handwheel

The Manual Operation mode is required for setting up the machine tool. In this mode of operation, you can position the machine axes manually or by increments, set the datums, and tilt the working plane.

The El. Handwheel mode of operation allows you to move the machine axes manually with the HR electronic handwheel.

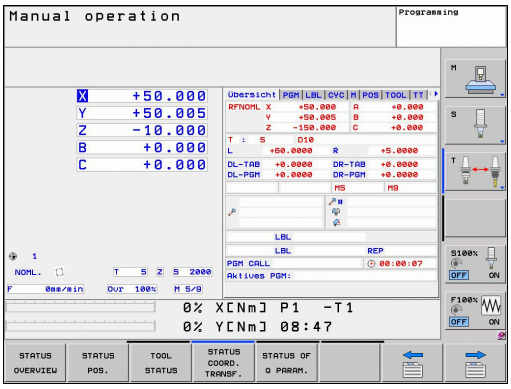

Soft keys for selecting the screen layout (select as described previously)

Window	Soft key
Positions	POSITION
Left: positions, right: status display	POSITION + STATUS

Positioning with Manual Data Input

This mode of operation is used for programming simple traversing movements, such as for face milling or prepositioning.

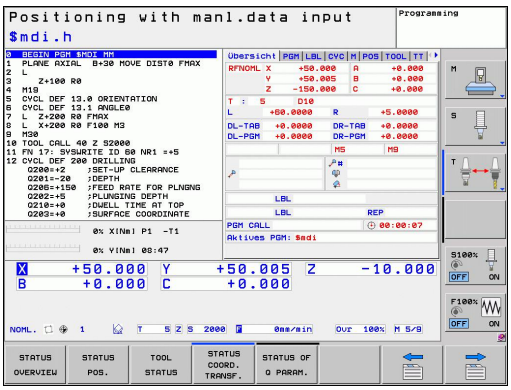

Soft keys for selecting the screen layout

Window	Soft key
Program	PGM
Left: program blocks, right: status display	PROGRAM + STATUS

Programming

In this mode of operation you can write your part programs. The FK free programming feature, the various cycles and the Q parameter functions help you with programming and add necessary information. If desired, you can have the programming graphics show the programmed paths of traverse.

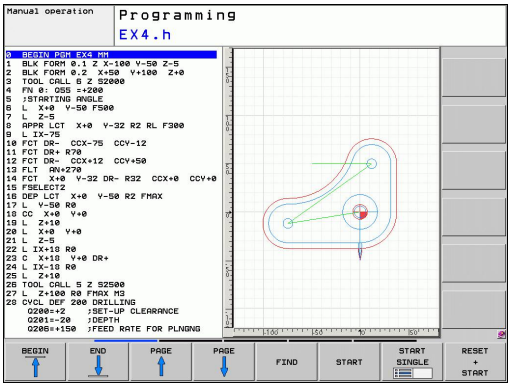

Soft keys for selecting the screen layout

Window	Soft key
Program	PGM
Left: program, right: program structure	PROGRAM + SECTS
Left: program, right: programming graphics	PROGRAM + GRAPHICS

Test Run

In the Test Run mode of operation, the TNC checks programs and program sections for errors, such as geometrical incompatibilities, missing or incorrect data within the program or violations of the working space. This simulation is supported graphically in different display modes.

Soft keys for selecting the screen layout: See "Program Run, Full Sequence and Program Run, Single Block", page 68.

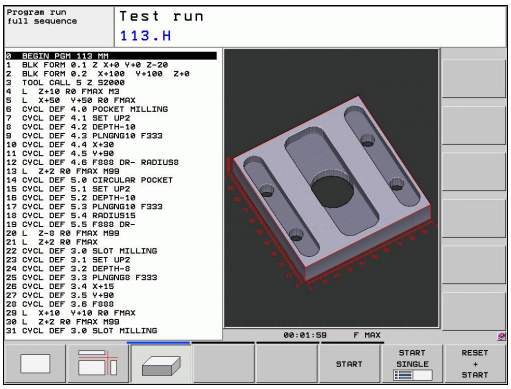

Program Run, Full Sequence and Program Run, Single Block

In the Program Run, Full Sequence mode of operation the TNC executes a part program continuously to its end or to a manual or programmed stop. You can resume program run after an interruption.

In the Program Run, Single Block mode of operation you execute each block separately by pressing the machine START button.

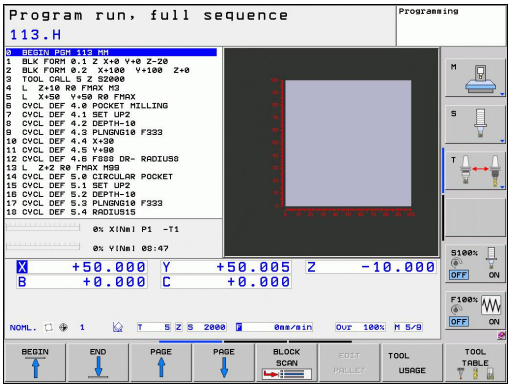

Soft keys for selecting the screen layout

Window	Soft key
Program	PGM
Left: program, right: program structure	PROGRAM + SECTS
Left: program, right: status	PROGRAM + STATUS
Left: program, right: graphics	PROGRAM + GRAPHICS
Graphics	GRAPHICS

2.4 Status displays

"General" status display

The status display in the lower part of the screen informs you of the current state of the machine tool. It is displayed automatically in the following modes of operation:

- Program Run, Single Block and Program Run, Full Sequence, except if the screen layout is set to display graphics only, and
- Positioning with Manual Data Input (MDI).

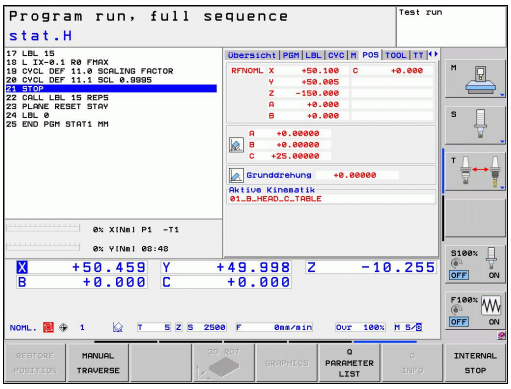

In the Manual Operation and El. Handwheel modes the status display appears in the large window.

Information in the status display

Icon	Meaning
ACTL.	Position display: Actual, nominal or distance-to-go coordinates mode
X Y Z	Machine axes; the TNC displays auxiliary axes in lower-case letters. The sequence and quantity of displayed axes is determined by the machine tool builder. Refer to your machine manual for more information
	Number of the active presets from the preset table. If the datum was set manually, the TNC displays the text **MAN** behind the symbol
F S M	The displayed feed rate in inches corresponds to one tenth of the effective value. Spindle speed S, feed rate F and active M functions
	Axis is clamped
	Axis can be moved with the handwheel
	Axes are moving under a basic rotation
	Axes are moving in a tilted working plane
	No active program

Icon	Meaning
	Program run has started
	Program run is stopped
	Program run is being aborted

Additional status displays

The additional status displays contain detailed information on the program run. They can be called in all operating modes except for the Programming and Editing mode of operation.

To switch on the additional status display:

- Call the soft-key row for screen layout
- Select the screen layout with additional status display: In the right half of the screen, the TNC shows the **OVERVIEW** status form

To select an additional status display:

- Switch the soft-key rows until the STATUS soft keys appear
- Either select the additional status display directly by soft key, e.g. positions and coordinates, or
- use the switch-over soft keys to select the desired view

The available status displays described below can be selected either directly by soft key or with the switch-over soft keys.

Please note that some of the status information described below is not available unless the associated software option is enabled on your TNC.

Overview

After switch-on, the TNC displays the **Overview** status form, provided that you have selected the PROGRAM+STATUS screen layout (or POSITION + STATUS). The overview form contains a summary of the most important status information, which you can also find on the various detail forms.

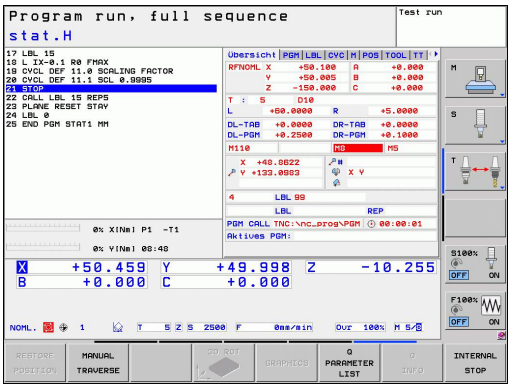

Soft key	Meaning
STATUS OVERVIEW	Position display
	Tool information
	Active M functions
	Active coordinate transformations
	Active subprogram
	Active program section repeat
	Program called with **PGM CALL**
	Current machining time
	Name of the active main program

General program information (PGM tab)

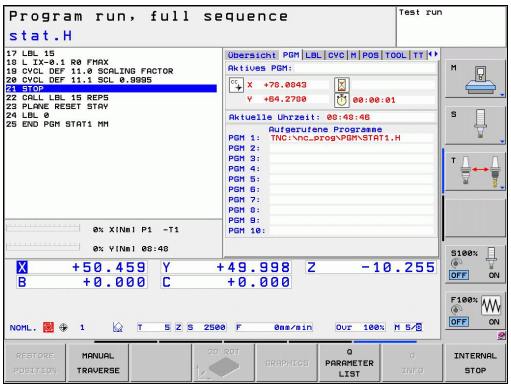

Soft key	Meaning
No direct selection possible	Name of the active main program
	Circle center CC (pole)
	Dwell time counter
	Machining time when the program was completely simulated in the **Test Run** operating mode
	Current machining time in percent
	Current time
	Active programs

Program section repeat/Subprograms (LBL tab)

Soft key	Meaning
No direct selection possible	Active program section repeats with block number, label number, and number of programmed repeats/repeats yet to be run
	Active subprogram numbers with block number in which the subprogram was called and the label number that was called

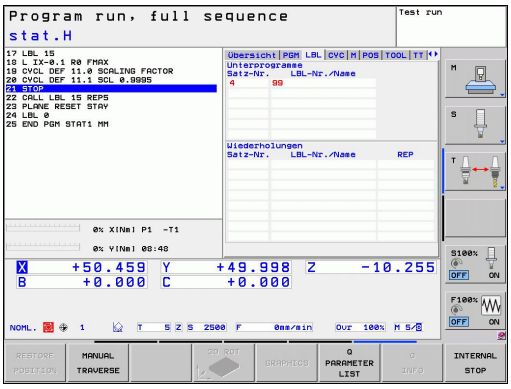

Information on standard cycles (CYC tab)

Soft key	Meaning
No direct selection possible	Active machining cycle
	Active values of Cycle 32 Tolerance

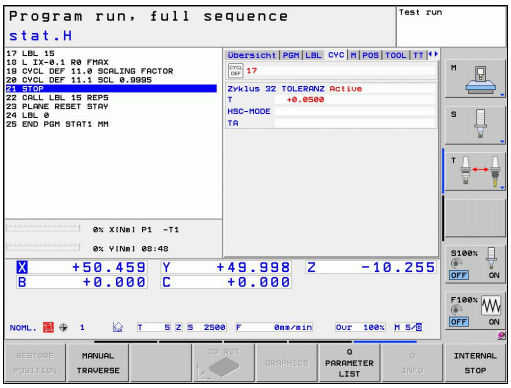

Active miscellaneous functions M (M tab)

Soft key	Meaning
No direct selection possible	List of the active M functions with fixed meaning
	List of the active M functions that are adapted by your machine manufacturer

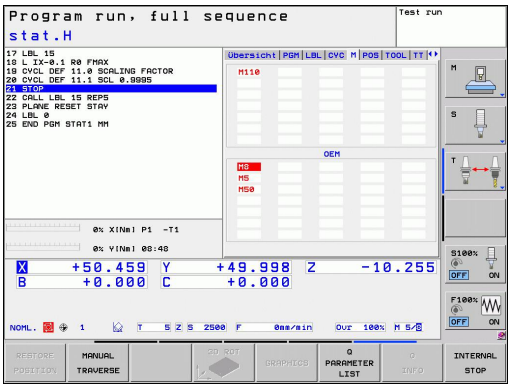

Positions and coordinates (POS tab)

Soft key	Meaning
STATUS POS.	Type of position display, e.g. actual position
	Tilt angle of the working plane
	Angle of a basic rotation
	Active kinematics

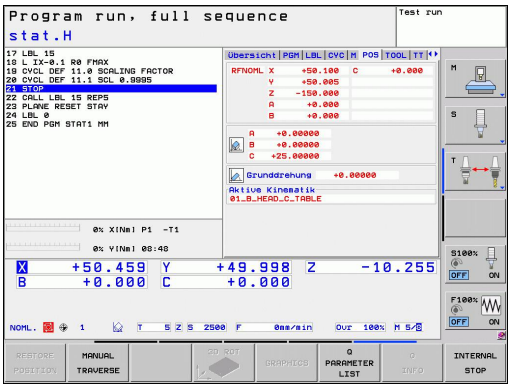

Information on tools (TOOL tab)

Soft key	Meaning
TOOL STATUS	Display of active tool: ■ T: Tool number and name ■ RT: Number and name of a replacement tool
	Tool axis
	Tool length and radii
	Oversizes (delta values) from the tool table (TAB) and the **TOOL CALL** (PGM)
	Tool life, maximum tool life (TIME 1) and maximum tool life for **TOOL CALL** (TIME 2)
	Display of programmed tool and replacement tool

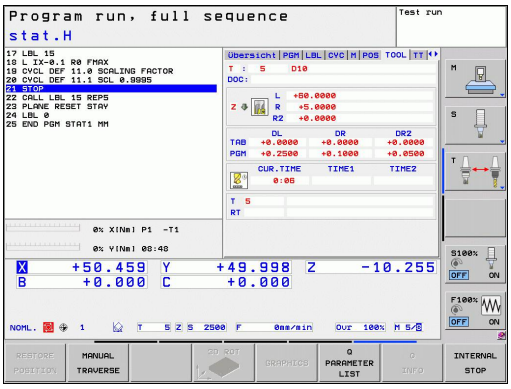

Tool measurement (TT tab)

The TNC displays the TT tab only if the function is active on your machine.

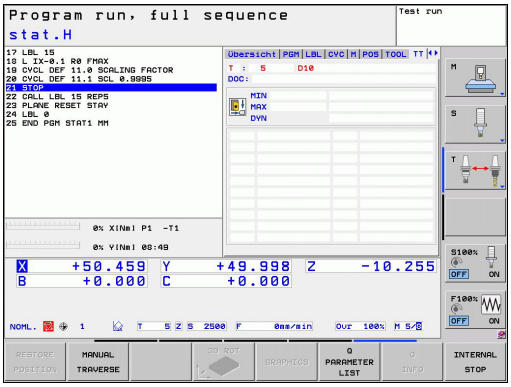

Soft key	Meaning
No direct selection possible	Number of the tool to be measured
	Display whether the tool radius or the tool length is being measured
	MIN and MAX values of the individual cutting edges and the result of measuring the rotating tool (DYN = dynamic measurement)
	Cutting edge number with the corresponding measured value. If the measured value is followed by an asterisk, the permissible tolerance in the tool table was exceeded

Coordinate transformations (TRANS tab)

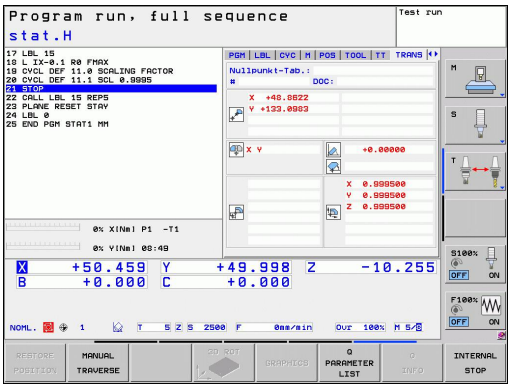

Soft key	Meaning
STATUS COORD. TRANSF.	Name of the active datum table
	Active datum number (**#**), comment from the active line of the active datum number (**DOC**) from Cycle 7
	Active datum shift (Cycle 7); The TNC displays an active datum shift in up to 8 axes
	Mirrored axes (Cycle 8)
	Active basic rotation
	Active rotation angle (Cycle 10)
	Active scaling factor/factors (Cycles 11 / 26); The TNC displays an active scaling factor in up to 6 axes
	Scaling datum

For further information, refer to the User's Manual for Cycles, "Coordinate Transformation Cycles."

Displaying Q parameters (QPARA tab)

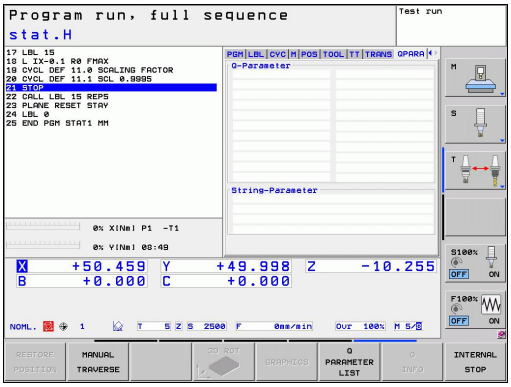

Soft key	Meaning
STATUS OF Q PARAM.	Display the current values of the defined Q parameters
	Display the character strings of the defined string parameters

2.5 Accessories: HEIDENHAIN 3-D Touch Probes and Electronic Handwheels

3-D touch probes

The various HEIDENHAIN 3-D touch probes enable you to:

- Automatically align workpieces
- Quickly and precisely set datums
- Measure the workpiece during program run
- Measure and inspect tools

All of the cycle functions (touch probe cycles and fixed cycles) are described in the Cycle Programming User's Manual. Please contact HEIDENHAIN if you require a copy of this User's Manual. ID: 679 220-xx

TS 220, TS 440, TS 444, TS 640 und TS 740 touch trigger probes

These touch probes are particularly effective for automatic workpiece alignment, datum setting and workpiece measurement. The TS 220 transmits the triggering signals to the TNC via cable and is a cost-effective alternative for applications where digitizing is not frequently required.

The TS 640 (see figure) and the smaller TS 440 feature infrared transmission of the triggering signal to the TNC. This makes them highly convenient for use on machines with automatic tool changers.

Principle of operation: HEIDENHAIN triggering touch probes feature a wear resisting optical switch that generates an electrical signal as soon as the stylus is deflected. This signal is transmitted to the control, which stores the current position of the stylus as the actual value.

TT 140 tool touch probe for tool measurement

The TT 140 is a triggering 3-D touch probe for tool measurement and inspection. Your TNC provides three cycles for this touch probe with which you can measure the tool length and radius automatically either with the spindle rotating or stopped. The TT 140 features a particularly rugged design and a high degree of protection, which make it insensitive to coolants and swarf. The triggering signal is generated by a wear-resistant and highly reliable optical switch.

HR electronic handwheels

Electronic handwheels facilitate moving the axis slides precisely by hand. A wide range of traverses per handwheel revolution is available. Apart from the HR 130 and HR 150 panel-mounted handwheels, HEIDENHAIN also offers the HR 410 portable handwheel.

3

Programming: Fundamentals, file management

3.1 Fundamentals

Position encoders and reference marks

The machine axes are equipped with position encoders that register the positions of the machine table or tool. Linear axes are usually equipped with linear encoders, rotary tables and tilting axes with angle encoders.

When a machine axis moves, the corresponding position encoder generates an electrical signal. The TNC evaluates this signal and calculates the precise actual position of the machine axis.

If there is a power interruption, the calculated position will no longer correspond to the actual position of the machine slide. To recover this association, incremental position encoders are provided with reference marks. The scales of the position encoders contain one or more reference marks that transmit a signal to the TNC when they are crossed over. From that signal the TNC can re-establish the assignment of displayed positions to machine positions. For linear encoders with distance-coded reference marks, the machine axes need to move by no more than 20 mm, for angle encoders by no more than 20°.

With absolute encoders, an absolute position value is transmitted to the control immediately upon switch-on. In this way the assignment of the actual position to the machine slide position is re-established directly after switch-on.

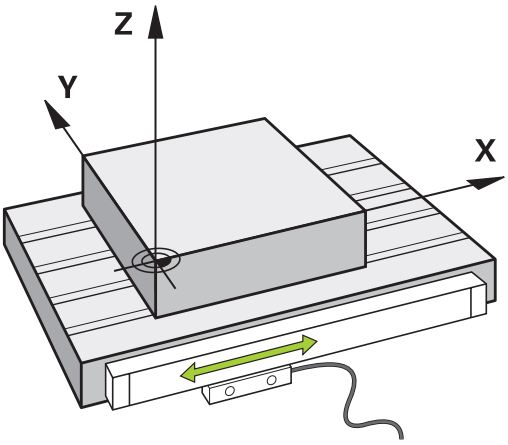

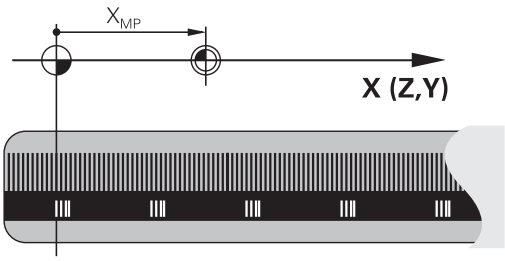

Reference system

A reference system is required to define positions in a plane or in space. The position data are always referenced to a predetermined point and are described through coordinates.

The Cartesian coordinate system (a rectangular coordinate system) is based on the three coordinate axes X, Y and Z. The axes are mutually perpendicular and intersect at one point called the datum. A coordinate identifies the distance from the datum in one of these directions. A position in a plane is thus described through two coordinates, and a position in space through three coordinates.

Coordinates that are referenced to the datum are referred to as absolute coordinates. Relative coordinates are referenced to any other known position (reference point) you define within the coordinate system. Relative coordinate values are also referred to as incremental coordinate values.

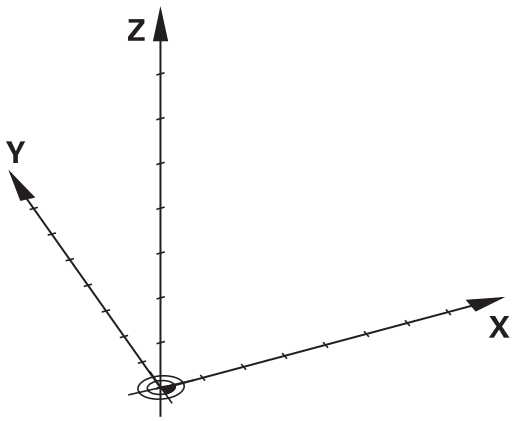

Reference system on milling machines

When using a milling machine, you orient tool movements to the Cartesian coordinate system. The illustration at right shows how the Cartesian coordinate system describes the machine axes. The figure illustrates the right-hand rule for remembering the three axis directions: the middle finger points in the positive direction of the tool axis from the workpiece toward the tool (the Z axis), the thumb points in the positive X direction, and the index finger in the positive Y direction.

The TNC 320 can control up to 5 axes optionally. The axes U, V and W are secondary linear axes parallel to the main axes X, Y and Z, respectively. Rotary axes are designated as A, B and C. The illustration at lower right shows the assignment of secondary axes and rotary axes to the main axes.

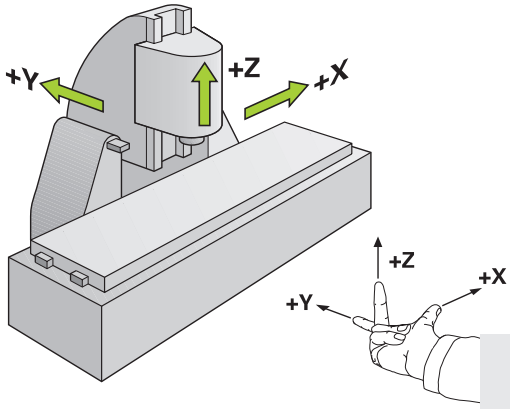

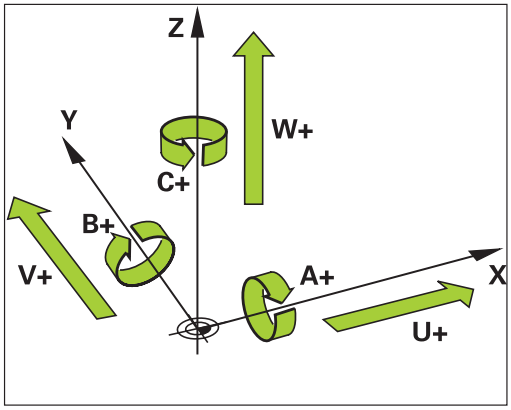

Designation of the axes on milling machines

The X, Y and Z axes on your milling machine are also referred to as tool axis, principal axis (1st axis) and secondary axis (2nd axis). The assignment of the tool axis is decisive for the assignment of the principal and secondary axes.

Tool axis	Principal axis	Secondary axis
X	Y	Z
Y	Z	X
Z	X	Y

Polar coordinates

If the production drawing is dimensioned in Cartesian coordinates, you also write the NC program using Cartesian coordinates. For parts containing circular arcs or angles it is often simpler to give the dimensions in polar coordinates.

While the Cartesian coordinates X, Y and Z are three-dimensional and can describe points in space, polar coordinates are two-dimensional and describe points in a plane. Polar coordinates have their datum at a circle center (CC), or pole. A position in a plane can be clearly defined by the:

- Polar Radius, the distance from the circle center CC to the position, and the
- Polar Angle, the value of the angle between the angle reference axis and the line that connects the circle center CC with the position.

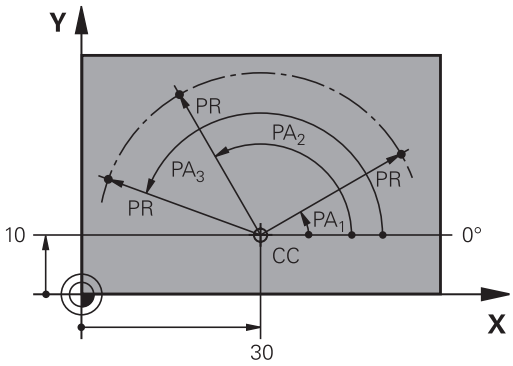

Setting the pole and the angle reference axis

The pole is set by entering two Cartesian coordinates in one of the three planes. These coordinates also set the reference axis for the polar angle PA.

Coordinates of the pole (plane)	Reference axis of the angle
X/Y	+X
Y/Z	+Y
Z/X	+Z

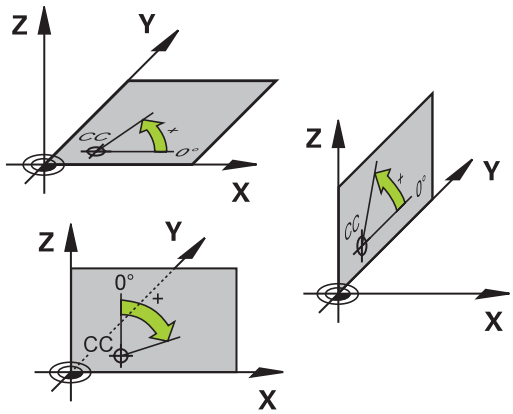

Absolute and incremental workpiece positions

Absolute workpiece positions

Absolute coordinates are position coordinates that are referenced to the datum of the coordinate system (origin). Each position on the workpiece is uniquely defined by its absolute coordinates.

Example 1: Holes dimensioned in absolute coordinates

Hole 1	Hole 2	Hole 3
X = 10 mm	X = 30 mm	X = 50 mm
Y = 10 mm	Y = 20 mm	Y = 30 mm

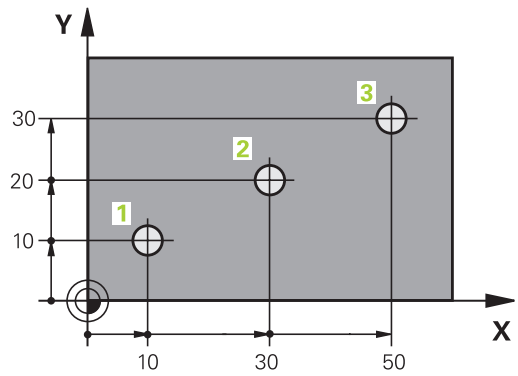

Incremental workpiece positions

Incremental coordinates are referenced to the last programmed nominal position of the tool, which serves as the relative (imaginary) datum. When you write an NC program in incremental coordinates, you thus program the tool to move by the distance between the previous and the subsequent nominal positions. This is why they are also referred to as chain dimensions.

To program a position in incremental coordinates, enter the function "I" before the axis.

Example 2: Holes dimensioned in incremental coordinates

Absolute coordinates of hole 4
X = 10 mm
Y = 10 mm

Hole 5, with respect to 4	Hole 6, with respect to 5
X = 20 mm	X = 20 mm
Y = 10 mm	Y = 10 mm

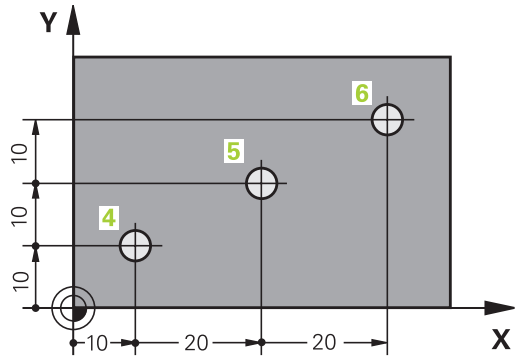

Absolute and incremental polar coordinates

Absolute polar coordinates always refer to the pole and the angle reference axis.

Incremental polar coordinates always refer to the last programmed nominal position of the tool.

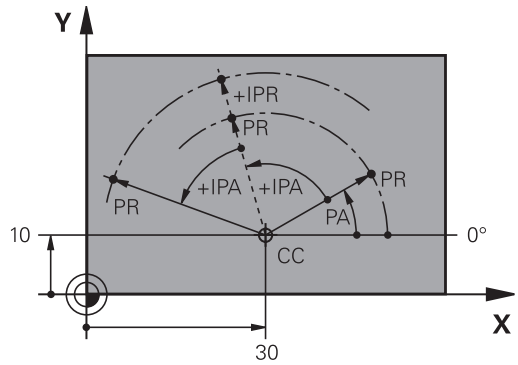

Selecting the datum

A production drawing identifies a certain form element of the workpiece, usually a corner, as the absolute datum. When setting the datum, you first align the workpiece along the machine axes, and then move the tool in each axis to a defined position relative to the workpiece. Set the display of the TNC either to zero or to a known position value for each position. This establishes the reference system for the workpiece, which will be used for the TNC display and your part program.

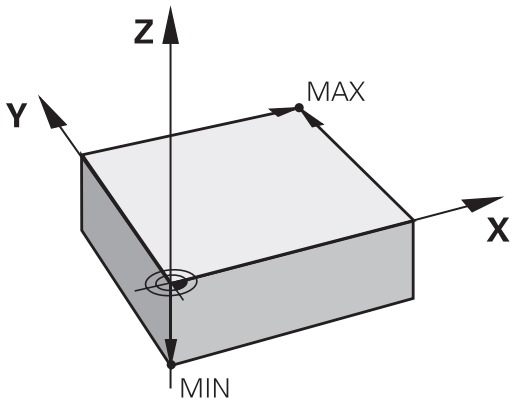

If the production drawing is dimensioned in relative coordinates, simply use the coordinate transformation cycles (see User's Manual for Cycles, Cycles for Coordinate Transformation).

If the production drawing is not dimensioned for NC, set the datum at a position or corner on the workpiece from which the dimensions of the remaining workpiece positions can be most easily measured.

The fastest, easiest and most accurate way of setting the datum is by using a 3-D touch probe from HEIDENHAIN. See "Setting the Datum with a 3-D Touch Probe" in the Cycle Programming User's Manual.

Example

The workpiece drawing shows holes (**1** to **4**) whose dimensions are shown with respect to an absolute datum with the coordinates X=0 Y=0. Holes **5** to **7** are dimensioned with respect to a relative datum with the absolute coordinates X=450, Y=750. With the **DATUM SHIFT** cycle you can temporarily set the datum to the position X=450, Y=750, to be able to program holes **5** to **7** without further calculations.

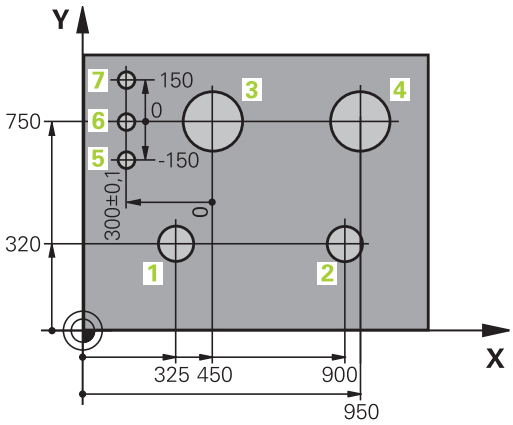

3.2 Opening programs and entering

Organization of an NC program in HEIDENHAIN Conversational format

A part program consists of a series of program blocks. The figure at right illustrates the elements of a block.

The TNC numbers the blocks in ascending sequence.

The first block of a program is identified by **BEGIN PGM**, the program name and the active unit of measure.

The subsequent blocks contain information on:

- The workpiece blank
- Tool calls
- Approaching a safe position
- Feed rates and spindle speeds, as well as
- Path contours, cycles and other functions

The last block of a program is identified by **END PGM** the program name and the active unit of measure.

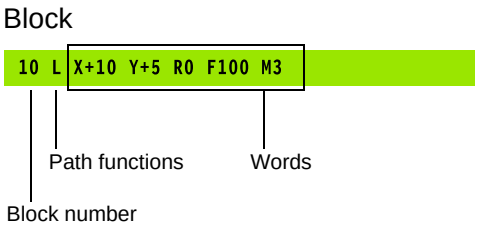

> **!** After each tool call, HEIDENHAIN recommends always traversing to a safe position from which the TNC can position the tool for machining without causing a collision!

Define the blank: BLK FORM

Immediately after initiating a new program, you define a cuboid workpiece blank. If you wish to define the blank at a later stage, press the SPEC FCT key, the PROGRAM DEFAULTS soft key, and then the BLK FORM soft key. This definition is needed for the TNC's graphic simulation feature. The sides of the workpiece blank lie parallel to the X, Y and Z axes and can be up to 100 000 mm long. The workpiece blank is defined by two of its corner points:

- MIN point: the smallest X, Y and Z coordinates of the blank form, entered as absolute values
- MAX point: the largest X, Y and Z coordinates of the blank form, entered as absolute or incremental values

> ⇨ You only need to define the workpiece blank if you wish to run a graphic test for the program!

Opening a new part program

You always enter a part program in the **PROGRAMMING AND EDITING** mode of operation. An example of program initiation:

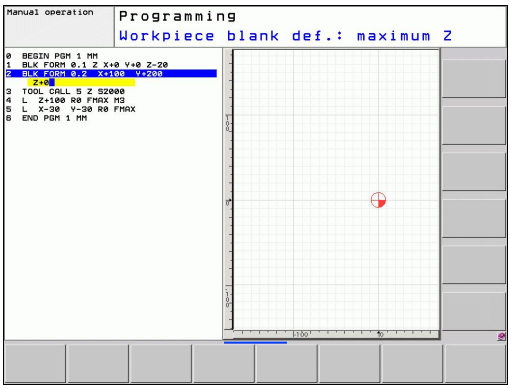

- Select the **PROGRAMMING** mode of operation

- Call the file manager: Press the PGM MGT key

Select the directory in which you wish to store the new program:

FILE NAME = ALT.H

- Enter the new program name and confirm your entry with the ENT key.

- Select the unit of measure: Press the MM or INCH soft key. The TNC switches the screen layout and initiates the dialog for defining the **BLK FORM** (workpiece blank)

WORKING PLANE IN GRAPHIC: XY

- Enter spindle axis, e.g. Z

WORKPIECE BLANK DEF.: MINIMUM

- Enter in sequence the X, Y and Z coordinates of the MIN point and confirm each of your entries with the ENT key

WORKPIECE BLANK DEF.: MAXIMUM

- Enter in sequence the X, Y and Z coordinates of the MAX point and confirm each of your entries with the ENT key

Example: Display the BLK form in the NC program

0 BEGIN PGM NEW MM	Program begin, name, unit of measure
1 BLK FORM 0.1 Z X+0 Y+0 Z-40	Spindle axis, MIN point coordinates
2 BLK FORM 0.2 X+100 Y+100 Z+0	MAX point coordinates
3 END PGM NEW MM	Program end, name, unit of measure

The TNC automatically generates the block numbers as well as the **BEGIN** and **END** blocks.

If you do not wish to define a blank form, cancel the dialog at **Working plane in graphic: XY** by pressing the DEL key.

The TNC can display the graphics only if the shortest side is at least 50 µm long and the longest side is no longer than 99 999.999 mm.

Programming tool movements in conversational

To program a block, initiate the dialog by pressing a function key. In the screen headline, the TNC then asks you for all the information necessary to program the desired function.

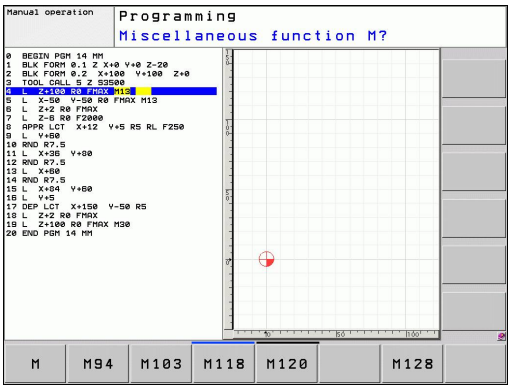

> If you enter DIN/ISO functions via a connected USB keyboard, make sure that capitalization is active.

Example of a positioning block

- Open block

COORDINATES ?

- **10** (Enter the target coordinate for the X axis)
- **20** (Enter the target coordinate for the Y axis)
- go to the next question with ENT.

RADIUS COMP.: RL/RR/NO COMP.?

- Enter "No radius compensation" and go to the next question with ENT.

FEED RATE F=? / F MAX = ENT

- 100 (Enter a feed rate of 100 mm/min for this path contour)
- go to the next question with ENT.

MISCELLANEOUS FUNCTION M ?

- Enter **3** (miscellaneous function **M3** "Spindle ON").
- The TNC ends this dialog by pressing the ENT key.

The program-block window displays the following line:

```
3 L X+10 Y+5 R0 F100 M3
```

Possible feed rate input

Functions for setting the feed rate	Soft key
Rapid traverse, non-modal. Exception: If defined before an **APPR** block, **FMAX** is also in effect for moving to an auxiliary point (See "Important positions for approach and departure", page 175)	F MAX
Traverse feed rate automatically calculated in **TOOL CALL**	F AUTO
Move at the programmed feed rate (unit of measure is mm/min or 1/10 inch/min). With rotary axes, the TNC interprets the feed rate in degrees/min, regardless of whether the program is written in mm or inches	F
Define the feed per revolution (units in mm/rev or inch/rev). Caution: In inch-programs, FU cannot be combined with M136	FU
Define the tooth feed (units in mm/tooth or inch/tooth). The number of teeth must be defined in the tool table in the **CUT.** column	FZ

Functions for conversational guidance	Key
Ignore the dialog question	NO ENT
End the dialog immediately	END
Abort the dialog and erase the block	DEL

Actual position capture

The TNC enables you to transfer the current tool position into the program, for example during

- Positioning-block programming
- Cycle programming

To transfer the correct position values, proceed as follows:

- Place the input box at the position in the block where you want to insert a position value

- Select the actual-position-capture function: In the soft-key row the TNC displays the axes whose positions can be transferred

- Select the axis: The TNC writes the current position of the selected axis into the active input box

In the working plane the TNC always captures the coordinates of the tool center, even though tool radius compensation is active.

In the tool axis the TNC always captures the coordinates of the tool tip and thus always takes the active tool length compensation into account.

The TNC keeps the soft-key row for axis selection active until you deactivate it by pressing the actual-position-capture key again. This behavior remains in effect even if you save the current block and open a new one with a path function key. If you select a block element in which you must choose an input alternative via soft key (e.g. for radius compensation), then the TNC also closes the soft-key row for axis selection.

The actual-position-capture function is not allowed if the tilted working plane function is active.

Editing a program

> You cannot edit a program while it is being run by the TNC in a machine operating mode.

While you are creating or editing a part program, you can select any desired line in the program or individual words in a block with the arrow keys or the soft keys:

Function	Soft key/Keys
Go to previous page	PAGE
Go to next page	PAGE
Go to beginning of program	BEGIN
Go to end of program	END
Change the position of the current block on the screen. Press this soft key to display additional program blocks that are programmed before the current block	
Change the position of the current block on the screen. Press this soft key to display additional program blocks that are programmed after the current block	
Move from one block to the next	↑ ↓
Select individual words in a block	→ ←
To select a certain block, press the GOTO key, enter the desired block number, and confirm with the ENT key. Or: Enter the block number step and press the N LINES soft key to jump over the entered number of lines upward or downward	GOTO

Function	Soft key/Key
Set the selected word to zero	CE
Erase an incorrect number	CE
Clear a (non-blinking) error message	CE
Delete the selected word	NO ENT
Delete the selected block	DEL
Erase cycles and program sections	DEL
Insert the block that you last edited or deleted	INSERT LAST NC BLOCK

Inserting blocks at any desired location

- Select the block after which you want to insert a new block and initiate the dialog

Editing and inserting words

- Select a word in a block and overwrite it with the new one. The plain-language dialog is available while the word is highlighted
- To accept the change, press the END key

If you want to insert a word, press the horizontal arrow key repeatedly until the desired dialog appears. You can then enter the desired value.

Looking for the same words in different blocks

Set the AUTO DRAW soft key to OFF.

- Select a word in a block: Press the arrow key repeatedly until the highlight is on the desired word
- Select a block with the arrow keys

The word that is highlighted in the new block is the same as the one you selected previously.

If you have started a search in a very long program, the TNC shows a progress display window. You then have the option of canceling the search via soft key.

Finding any text

- Select the search function: Press the FIND soft key. The TNC displays the **Find text:** dialog prompt
- Enter the text that you wish to find
- Find the text: Press the EXECUTE soft key

Marking, copying, deleting and inserting program sections

The TNC provides certain functions for copying program sections within an NC program or into another NC program—see the table below.

To copy a program section, proceed as follows:

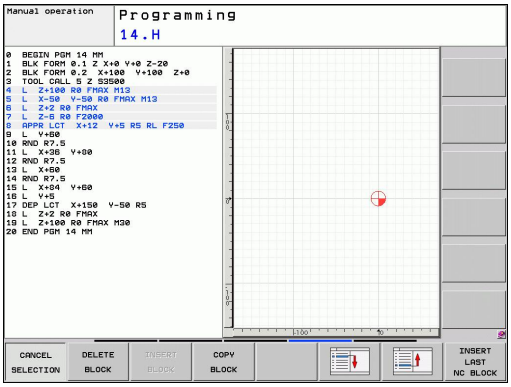

- Select the soft-key row containing the marking functions
- Select the first (last) block of the section you wish to copy
- To mark the first (last) block, press the SELECT BLOCK soft key. The TNC then highlights the first character of the block and the CANCEL SELECTION soft key appears
- Move the highlight to the last (first) block of the program section you wish to copy or delete. The TNC shows the marked blocks in a different color. You can end the marking function at any time by pressing the CANCEL SELECTION soft key
- To copy the selected program section, press the COPY BLOCK soft key. To delete the selected section, press the DELETE BLOCK soft key. The TNC stores the selected block
- Using the arrow keys, select the block after which you wish to insert the copied (deleted) program section

> ⇨ To insert the section into another program, select the corresponding program using the file manager and then mark the block after which you wish to insert the copied block.

- To insert the block, press the INSERT BLOCK soft key
- To end the marking function, press the CANCEL SELECTION soft key

Function	Soft key
Switch the marking function on	SELECT BLOCK
Switch the marking function off	CANCEL SELECTION
Delete the marked block	CUT OUT BLOCK
Insert the block that is stored in the buffer memory	INSERT BLOCK
Copy the marked block	COPY BLOCK

The TNC search function

The search function of the TNC enables you to search for any text within a program and replace it by a new text, if required.

Finding any text

- If required, select the block containing the word you wish to find

FIND

- Select the search function: The TNC superimposes the search window and displays the available search functions in the soft-key row (see table of search functions)

X

- **+40** (Enter the text to be searched for. The search is case-sensitive.)

FIND

- Start the search process: The TNC moves to the next block containing the text you are searching for

FIND

- Repeat the search process: The TNC moves to the next block containing the text you are searching for

END

- End the search function

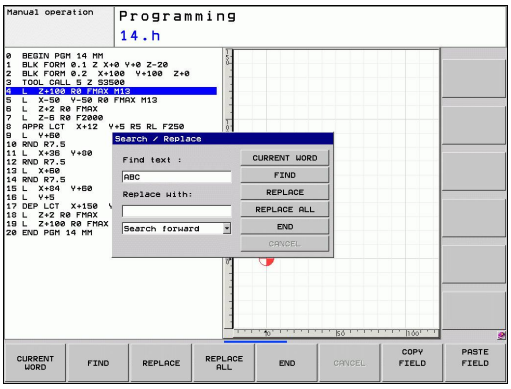

Finding/Replacing any text

The find/replace function is not possible if
- a program is protected
- the program is currently being run by the TNC

When using the REPLACE ALL function, ensure that you do not accidentally replace text that you do not want to change. Once replaced, such text cannot be restored.

- If required, select the block containing the word you wish to find

FIND
- Select the Search function: The TNC superimposes the search window and displays the available search functions in the soft-key row

X
- Enter the text to be searched for. Please note that the search is case-sensitive. Then confirm with the ENT key

Z
- Enter the text to be inserted. Please note that the entry is case-sensitive

FIND
- Start the search process: The TNC moves to the next occurrence of the text you are searching for

REPLACE
- To replace the text and then move to the next occurrence of the text, press the REPLACE soft key. To replace all text occurrences, press the REPLACE ALL soft key. To skip the text and move to its next occurrence press the FIND soft key

END
- End the search function

3.3 File manager: Fundamentals

Files

Files in the TNC	Type
Programs	
in HEIDENHAIN format	.H
in DIN/ISO format	.I
Tables for	
Tools	.T
Tool changers	.TCH
Datums	.D
Points	.PNT
Presets	.PR
Touch probes	.TP
Backup files	.BAK
Dependent data (e.g. structure items)	.DEP
Texts as	
ASCII files	.A
Protocol files	.TXT
Help files	.CHM

3.3 File manager: Fundamentals

When you write a part program on the TNC, you must first enter a program name. The TNC saves the program to the hard disk as a file with the same name. The TNC can also save texts and tables as files.

The TNC provides a special file management window in which you can easily find and manage your files. Here you can call, copy, rename and erase files.

With the TNC you can manage and save files up to a total size of **2 GB.**

> Depending on the setting, the TNC generates a backup file (*.bak) after editing and saving of NC programs. This can reduce the memory space available to you.

File names

When you store programs, tables and texts as files, the TNC adds an extension to the file name, separated by a point. This extension indicates the file type.

File name	File type
PROG20	.H

File names should not exceed 25 characters, otherwise the TNC cannot display the entire file name.

File names on the TNC must comply with this standard: The Open Group Base Specifications Issue 6 IEEE Std 1003.1, 2004 Edition (Posix-Standard). Accordingly, the file names may include the characters below:

A B C D E F G H I J K L M N O P Q R S T U V W X Y Z a b c d e f g h i j k l m n o p q r s t u v w x y z 0 1 2 3 4 5 6 7 8 9 . _ -

You should not use any other characters in file names in order to prevent any file transfer problems.

> The maximum limit for the path and file name together is 82 characters, See "Paths".

Data Backup

We recommend saving newly written programs and files on a PC at regular intervals.

The TNCremoNT data transmission freeware from HEIDENHAIN is a simple and convenient method for backing up data stored on the TNC.

You additionally need a data medium on which all machine-specific data, such as the PLC program, machine parameters, etc., are stored. Ask your machine manufacturer for assistance, if necessary.

Take the time occasionally to delete any unneeded files so that the TNC always has enough hard-disk space for system files (such as the tool table).

3.4 Working with the file manager

Directories

To ensure that you can easily find your files, we recommend that you organize your hard disk into directories. You can divide a directory into further directories, which are called subdirectories. With the –/+ key or ENT you can show or hide the subdirectories.

Paths

A path indicates the drive and all directories and subdirectories under which a file is saved. The individual names are separated by a backslash "\".

> The path, including all drive characters, directory and the file name, including the extension, must not exceed 82 characters!
>
> Drive designations must not include more than 8 uppercase letters.

Example

The directory AUFTR1 was created on the **TNC:** drive. Then, in the **AUFTR1** directory, the subdirectory NCPROG was created and the part program PROG1.H was copied into it. The part program now has the following path:

TNC:\AUFTR1\NCPROG\PROG1.H

The chart at right illustrates an example of a directory display with different paths.

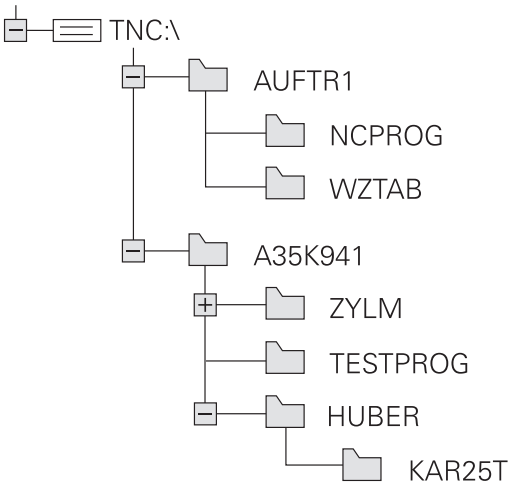

Overview: Functions of the file manager

Function	Soft key	Page
Copy a single file	COPY	102
Display a specific file type	SELECT TYPE	101
Create new file	NEW FILE	102
Display the last 10 files that were selected	LAST FILES	105
Delete a file or directory	DELETE	106
Tag a file	TAG	107
Rename a file	RENAME	108
Protect a file against editing and erasure	PROTECT	109
Cancel file protection	UNPROTECT	109
Importing tool tables	IMPORT TABLE	152
Manage network drives	NET	112
Select the editor	SELECT EDITOR	109
Sort files by properties	SORT	108
Copy a directory	COPY DIR	105
Delete directory with all its subdirectories	DELETE ALL	
Display all the directories of a particular drive	UPDATE TREE	
Rename a directory	RENAME	
Create a new directory	NEW DIRECTORY	

Calling the file manager

PGM MGT

- Press the PGM MGT key: The TNC displays the file management window (see figure for default setting. If the TNC displays a different screen layout, press the WINDOW soft key)

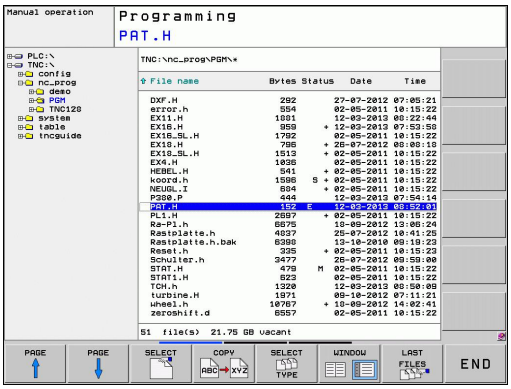

The narrow window on the left shows the available drives and directories. Drives designate devices with which data are stored or transferred. One drive is the hard disk of the TNC. Other drives are the interfaces (RS232, Ethernet), which can be used, for example, for connecting a personal computer. A directory is always identified by a folder symbol to the left and the directory name to the right. Subdirectories are shown to the right of and below their parent directories. A triangle in front of the folder symbol indicates that there are further subdirectories, which can be shown with the –/+ or ENT keys.

The wide window on the right shows you all files that are stored in the selected directory. Each file is shown with additional information, illustrated in the table below.

Display	Meaning
File name	Name with max. 25 characters
Type	File type
Bytes	File size in bytes
Status	File properties:
E	Program is selected in the Programming mode of operation
S	Program is selected in the Test Run mode of operation
M	Program is selected in a Program Run mode of operation
	File is protected against erasing and editing
	File is protected against erasing and editing, because it is being run
Date	Date that the file was last edited
Time	Time that the file was last edited

Selecting drives, directories and files

- Call the file manager

Use the arrow keys or the soft keys to move the highlight to the desired position on the screen:

- Moves the highlight from the left to the right window, and vice versa

- Moves the highlight up and down within a window

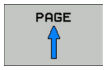

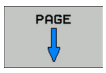

- Moves the highlight one page up or down within a window

Step 1: Select drive

- Move the highlight to the desired drive in the left window

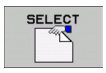

- To select a drive, press the SELECT soft key, or

- Press the ENT key

Step 2: Select a directory

- Move the highlight to the desired directory in the left-hand window—the right-hand window automatically shows all files stored in the highlighted directory

Step 3: Select a file

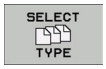

- Press the SELECT TYPE soft key

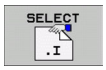

- Press the soft key for the desired file type, or

- To display all files, press the SHOW ALL soft key or

- Move the highlight to the desired file in the right window

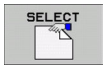

- Press the SELECT soft key, or

- Press the ENT key

The TNC opens the selected file in the operating mode from which you called the file manager

Creating a new directory

Move the highlight in the left window to the directory in which you want to create a subdirectory

- **NEW** (enter the new directory name)

- Press the ENT key

DIRECTORY \CREATE NEW ?

- Press the YES soft key to confirm, or

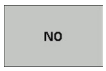

- Abort with the NO soft key.

Creating a new file

- Select the directory in which you wish to create the new file.

- **NEW** Enter the new file name with the file extension, and confirm with ENT, or

- Open a dialog to create a new file, **NEW** Enter the new file name with the file extension, and confirm with ENT.

Copying a single file

- Move the highlight to the file you wish to copy

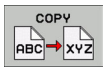

- Press the COPY soft key to select the copy function. The TNC opens a pop-up window

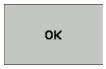

- Enter the name of the target file and confirm your entry with the ENT key or OK soft key: the TNC copies the file to the active directory or to the selected target directory. The original file is retained, or

- Press the Target Directory soft key to call a pop-up window in which you select the target directory by pressing the ENT key or the OK soft key: the TNC copies the file to the selected directory. The original file is retained.

When the copying process has been started with ENT or the OK soft key, the TNC displays a pop-up window with a progress indicator.

Copying files into another directory

- Select a screen layout with two equally sized windows
- To display directories in both windows, press the PATH soft key

In the right window

- Move the highlight to the directory into which you wish to copy the files, and display the files in this directory with the ENT key

In the left window

- Select the directory containing the files that you wish to copy and press ENT to display them

- Call the file tagging functions

- Move the highlight to the file you want to copy and tag it. You can tag several files in this way, if desired

- Copy the tagged files into the target directory

Additional tagging functions: See "Tagging files", page 107.

If you have tagged files in both the left and right windows, the TNC copies from the directory in which the highlight is located.

Overwriting files

If you copy files into a directory in which other files are stored under the same name, the TNC will ask whether the files in the target directory should be overwritten:

- To overwrite all files ("Existing files" check box selected), press the OK soft key, or
- Press the CANCEL soft key if no file is to be overwritten

If you wish to overwrite a protected file, you need to select the "Protected files" check box or cancel the copying process.

Copying a table

Importing lines to a table

If you are copying a table into an existing table, you can overwrite individual lines with the REPLACE FIELDS soft key. Prerequisites:

- The target table must already exist
- The file to be copied must only contain the lines you want to replace
- Both tables must have the same file extension

The **REPLACE FIELDS** function is used to overwrite lines in the target table. To avoid losing data, create a backup copy of the original table.

Example

With a tool presetter you have measured the length and radius of ten new tools. The tool presetter then generates the TOOL_Import.T tool table with 10 lines (for the 10 tools).

- Copy this table from the external data medium to any directory
- Copy the externally created table to the existing table using the TNC file management. The TNC asks if you wish to overwrite the existing TOOL.T tool table:
- If you press the **YES** soft key, the TNC will completely overwrite the current TOOL.T tool table. After the copying process the new TOOL.T table consists of 10 lines.
- Or press the **REPLACE FIELDS** soft key for the TNC to overwrite the 10 lines in the TOOL.T file. The data of the other lines is not changed.

Extracting lines from a table

You can select one or more lines in a table and save them in a separate table.

- Open the table from which you want to copy lines
- Use the arrow keys to select the first line to be copied
- Press the **MORE FUNCTIONS** soft key
- Press the **TAG** soft key
- Select additional lines, if required
- Press the **SAVE AS** soft key
- Enter a name for the table in which the selected lines are to be saved

Copying a directory

- Move the highlight in the right window onto the directory you want to copy
- Press the COPY soft key: the TNC opens the window for selecting the target directory
- Select the target directory and confirm with ENT or the OK soft key: The TNC copies the selected directory and all its subdirectories to the selected target directory

Choosing one of the last files selected

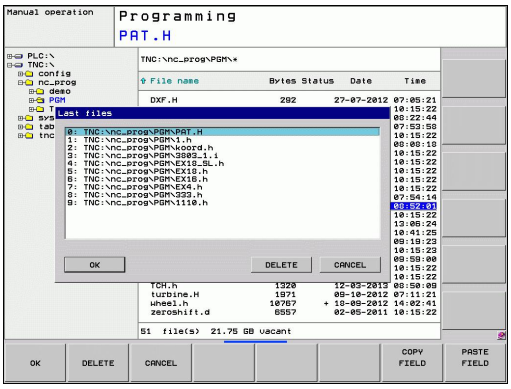

- Call the file manager

- Display the last 10 files selected: Press the LAST FILES soft key

Use the arrow keys to move the highlight to the file you wish to select:

- Moves the highlight up and down within a window

- To select the file, press the OK soft key, or

- Press the ENT key

Deleting a file

> **Caution: Data may be lost!**
> Once you delete files they cannot be restored!

- Move the highlight to the file you want to delete

- To select the erasing function, press the DELETE soft key. The TNC asks whether you really want to delete the file
- To confirm the deletion, press the OK soft key, or
- To cancel deletion, press the CANCEL soft key

Deleting a directory

> **Caution: Data may be lost!**
> Once you delete files they cannot be restored!

- Move the highlight to the directory you want to delete

- To select the erasing function, press the DELETE soft key. The TNC inquires whether you really intend to delete the directory and all its subdirectories and files
- To confirm the deletion, press the OK soft key, or
- To cancel deletion, press the CANCEL soft key

Tagging files

Tagging function	Soft key
Tag a single file	TAG FILE
Tag all files in the directory	TAG ALL FILES
Untag a single file	UNTAG FILE
Untag all files	UNTAG ALL FILES
Copy all tagged files	COPY TAG

Some functions, such as copying or erasing files, can not only be used for individual files, but also for several files at once. To tag several files, proceed as follows:

- Move the highlight to the first file

- To display the marking functions, press the TAG soft key.

- Tag a file by pressing the TAG FILE soft key.

- Move the highlight to the next file you wish to tag: Only works via soft keys. Do not use the arrow keys!

- To tag further files, press the TAG FILES soft key, etc.

- To copy the tagged files, press the COPY TAG soft key, or

- Delete the tagged files by pressing the END soft key to end the tagging functions, and then the DELETE soft key to delete the tagged files

Renaming a file

- Move the highlight to the file you wish to rename

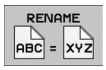

- Select the renaming function
- Enter the new file name; the file type cannot be changed
- To rename: Press the OK soft key or the ENT key

Sorting files

- Select the folder in which you wish to sort the files

- Select the SORT soft key
- Select the soft key with the corresponding display criterion

Additional functions

Protecting a file / Canceling file protection

- Move the highlight to the file you want to protect

- To select the additional functions, press the MORE FUNCTIONS soft key

- To activate file protection, press the PROTECT soft key. The file now has status P

- To cancel file protection, press the UNPROTECT soft key

Selecting the editor

- Move the highlight in the right window onto the file you want to open

- To select the additional functions, press the MORE FUNCTIONS soft key

- To select the editor with which to open the selected file, press the SELECT EDITOR soft key
- Mark the desired editor
- Press the OK soft key to open the file

Connecting/removing a USB device

- Move the highlight to the left window

- To select the additional functions, press the MORE FUNCTIONS soft key
- Shift the soft-key row

- Search for a USB device
- In order to remove the USB device, move the highlight to the USB device

- Remove the USB device

For more information: See "USB devices on the TNC", page 113.

Data transfer to/from an external data medium

Before you can transfer data to an external data medium, you must set up the data interface, See "Setting up data interfaces".

Depending on the data transfer software you use, problems can occur occasionally when you transmit data over a serial interface. They can be overcome by repeating the transmission.

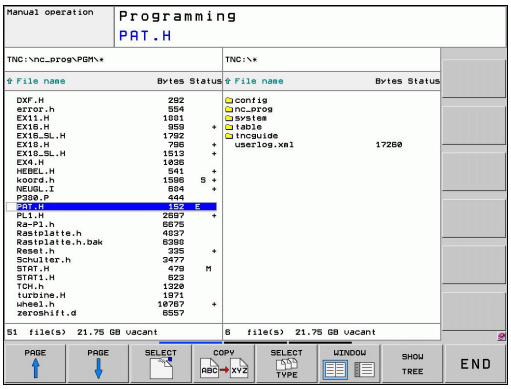

PGM MGT

- Call the file manager

WINDOW

- Select the screen layout for data transfer: press the WINDOW soft key. In the left half of the screen the TNC shows all files in the current directory. In the right half of the screen it shows all files saved in the root directory (TNC:\ ).

Use the arrow keys to highlight the file(s) that you want to transfer:

- Moves the highlight up and down within a window

- Moves the highlight from the right to the left window, and vice versa

If you wish to copy from the TNC to the external data medium, move the highlight in the left window to the file to be transferred.

If you wish to copy from the external data medium to the TNC, move the highlight in the right window to the file to be transferred.

- To select another drive or directory: Press the soft key for choosing the directory. The TNC opens a pop-up window. Select the desired directory in the pop-up window by using the arrow keys and the ENT key.

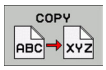

- Transfer a single file: Press the COPY soft key, or

- To transfer several files, press the TAG soft key (in the second soft-key row, see "Tagging files", page 111)

- Confirm with the OK or with the ENT key. A status window appears on the TNC, informing about the copying progress, or

- To end data transfer, move the highlight into left window and then press the WINDOW soft key. The standard file manager window is displayed again

To select another directory in the split-screen display, press the SHOW TREE soft key. If you press the SHOW FILES soft key, the TNC shows the content of the selected directory!

The TNC in a network

> To connect the Ethernet card to your network, See "Ethernet interface".
>
> The TNC logs error messages during network operation, See "Ethernet interface".

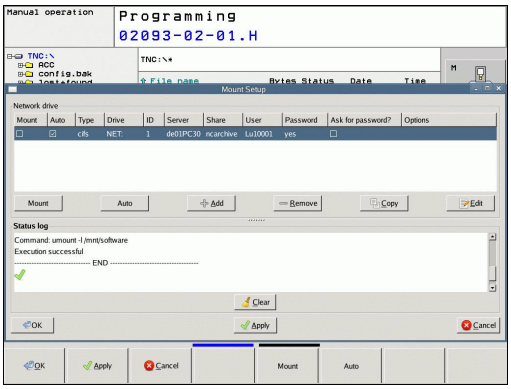

If the TNC is connected to a network, the directory window displays additional drives (see figure). All the functions described above (selecting a drive, copying files, etc.) also apply to network drives, provided that you have been granted the corresponding rights.

Connecting and disconnecting a network drive

PGM MGT

- To select the program management: Press the PGM MGT key. If necessary, press the WINDOW soft key to set up the screen as it is shown at the upper right

NET

- To select the network settings: Press the NETWORK soft key (second soft key row).
- To manage the network drives: Press the DEFINE NETWORK CONNECTN. soft key. In a window the TNC shows the network drives available for access. The soft keys described below are used to define the connection for each drive

Function	Soft key
Establish the network connection. If the connection is active, the TNC marks the **Mount** column.	**Connect**
Disconnect the network connection	**Unmount**
Automatically establish network connection whenever the TNC is switched on. The TNC marks the **Auto** column if the connection is established automatically	**Auto**
Set up new network connection	**Add**
Delete existing network connection	**Remove**
Copy network connection	**Copy**
Edit network connection	**Machining**
Clear status window	**Clear**

USB devices on the TNC

Backing up data from or loading onto the TNC is especially easy with USB devices. The TNC supports the following USB block devices:

- Floppy disk drives with FAT/VFAT file system
- Memory sticks with the FAT/VFAT file system
- Hard disks with the FAT/VFAT file system
- CD-ROM drives with the Joliet (ISO 9660) file system

The TNC automatically detects these types of USB devices when connected. The TNC does not support USB devices with other file systems (such as NTFS). The TNC displays the **USB: TNC does not support device** error message when such a device is connected.

The TNC also displays the **USB: TNC does not support device** error message if you connect a USB hub. In this case, simply acknowledge the message with the CE key.

In theory, you should be able to connect all USB devices with the file systems mentioned above to the TNC. It may happen that a USB device is not identified correctly by the control. In such cases, use another USB device.

The USB devices appear as separate drives in the directory tree, so you can use the file-management functions described in the earlier chapters correspondingly.

Your machine tool builder can assign permanent names for USB devices. Refer to your machine manual.

To remove a USB device, proceed as follows:

- ▶ Call the file manager: Press the PGM MGT key
- ▶ Select the left window with the arrow key
- ▶ Use the arrow keys to select the USB device to be removed
- ▶ Scroll through the soft-key row
- ▶ Select additional functions
- ▶ Select the function for removing USB devices. The TNC removes the USB device from the directory tree
- ▶ Exit the file manager

In order to re-establish a connection with a USB device that has been removed, press the following soft key:

- ▶ Select the function for reconnection of USB devices

4

Programming: Programming aids

4.1 Screen keyboard

If you are using the compact version (without an alphabetic keyboard) TNC 320, you can enter letters and special characters with the screen keyboard or with a PC keyboard connected over the USB port.

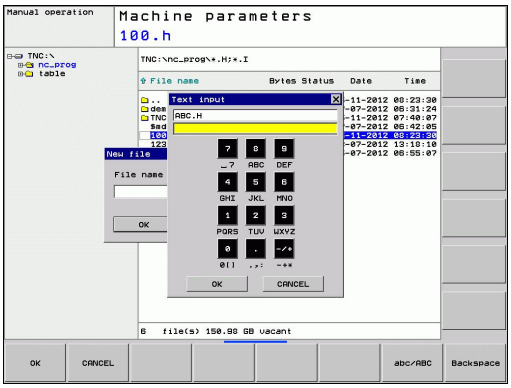

Enter the text with the screen keyboard

- Press the GOTO key if you want to enter letters, for example a program name or directory name, using the screen keyboard
- The TNC opens a window in which the numeric entry field of the TNC is displayed with the corresponding letters assigned
- You can move the cursor to the desired character by repeatedly pressing the respective key
- Wait until the selected character is transferred to the input field before you enter the next character
- Use the OK soft key to load the text into the open dialog field

Use the abc/ABC soft key to select upper or lower case. If your machine tool builder has defined additional special characters, you can call them with the SPECIAL CHARACTER soft key and insert them. To delete individual characters, use the Backspace soft key.

4.2 Adding comments

Application

You can add comments to a part program to explain program steps or make general notes.

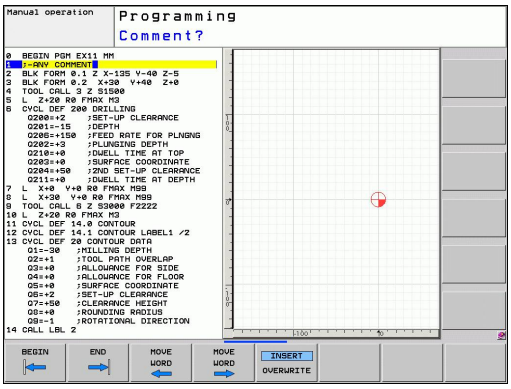

> If the TNC cannot show the entire comment on the screen, the **>>** sign is displayed.
>
> The last character in a comment block must not have any tilde (~).

There are three possibilities for adding comments.

Entering comments during programming

- Enter the data for a program block, then press the semicolon key ";" on the alphabetic keyboard—the TNC displays the dialog prompt **COMMENT?**
- Enter your comment and conclude the block by pressing the END key

Inserting comments after program entry

- Select the block to which a comment is to be added
- Select the last word in the block with the right arrow key: A semicolon appears at the end of the block and the TNC displays the dialog prompt **COMMENT?**
- Enter your comment and conclude the block by pressing the END key

Entering a comment in a separate block

- Select the block after which the comment is to be inserted
- Initiate the programming dialog with the semicolon key (;) on the alphabetic keyboard
- Enter your comment and conclude the block by pressing the END key

Functions for editing of the comment

Function	Soft key
Jump to beginning of comment	BEGIN
Jump to end of comment	END
Jump to the beginning of a word. Words must be separated by a space	MOVE WORD
Jump to the end of a word. Words must be separated by a space	MOVE WORD
Switch between insert mode and overwrite mode	INSERT OVERWRITE

4.3 Structuring programs

Definition and applications

This TNC function enables you to comment part programs in structuring blocks. Structuring blocks are short texts with up to 37 characters and are used as comments or headlines for the subsequent program lines.

With the aid of appropriate structuring blocks, you can organize long and complex programs in a clear and comprehensible manner.

This function is particularly convenient if you want to change the program later. Structuring blocks can be inserted into the part program at any point. They can also be displayed in a separate window, and edited or added to, as desired.

The inserted structure items are managed by the TNC in a separate file (extension: .SEC.DEP). This speeds navigation in the program structure window.

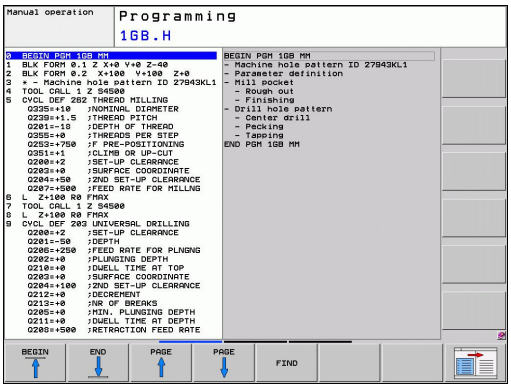

Displaying the program structure window / Changing the active window

- To display the program structure window, select the screen display PROGRAM+SECTS

- To change the active window, press the "Change window" soft key

Inserting a structuring block in the (left) program window

- Select the block after which the structuring block is to be inserted

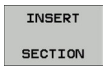

- Press the INSERT SECTION soft key or the * key on the ASCII keyboard
- Enter the structuring text with the alphabetic keyboard

- If necessary, change the structure depth with the soft key

Selecting blocks in the program structure window

If you are scrolling through the program structure window block by block, the TNC at the same time automatically moves the corresponding NC blocks in the program window. This way you can quickly skip large program sections.

4.4 Calculator

Operation

The TNC features an integrated calculator with the basic mathematical functions.

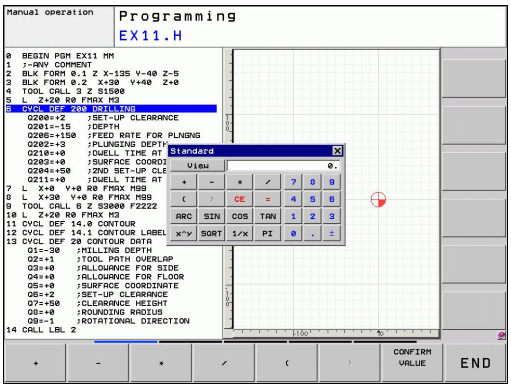

- Use the CALC key to show and hide the on-line calculator
- Selecting the calculator: The calculator is operated with short commands via soft key or through the alphabetic keyboard.

Mathematical function	Command (key)
Addition	+
Subtraction	–
Multiplication	*
Division	/
Calculations in parentheses	( )
Arc cosine	ARC
Sine	SIN
Cosine	COS
Tangent	TAN
Powers of values	X^Y
Square root	SQRT
Inversion	1/x
pi (3.14159265359)	PI
Add value to buffer memory	M+
Save the value to buffer memory	MS
Recall from buffer memory	MR
Delete buffer memory contents	MC
Natural logarithm	LN
Logarithm	LOG
Exponential function	e^x
Check the algebraic sign	SGN
Form the absolute value	ABS
Truncate decimal places	INT
Truncate integers	FRAC
Modulus operator	MOD
Select view	View
Delete value	CE
Unit of measure	MM or INCH
Display mode for angle values	DEG (degree) or RAD (radian measure)
Display mode of the numerical value	DEC (decimal) or HEX (hexadecimal)

Transferring the calculated value into the program

- Use the arrow keys to select the word into which the calculated value is to be transferred
- Superimpose the on-line calculator by pressing the CALC key and perform the desired calculation
- Press the actual-position-capture key or the APPLY VALUE soft key for the TNC to transfer the calculated value into the active input box and to close the calculator.

> You can also transfer values from a program into the calculator. When you press the FETCH VALUE soft key the TNC transfers the value from the active input field to the calculator.

Adjusting the position of the calculator

Press the ADDITIONAL FUNCTIONS soft key to get to the settings for shifting the calculator:

Function	Soft key
Move calculator in the direction of the arrow	
Adjust the increment for movement	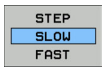
Position the calculator in the center	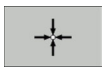

> You can also shift the calculator with the arrow keys on your keyboard. If you have connected a mouse you can also position the calculator with this.

4.5 Programming graphics

Generating / not generating graphics during programming

While you are writing the part program, you can have the TNC generate a 2-D pencil-trace graphic of the programmed contour.

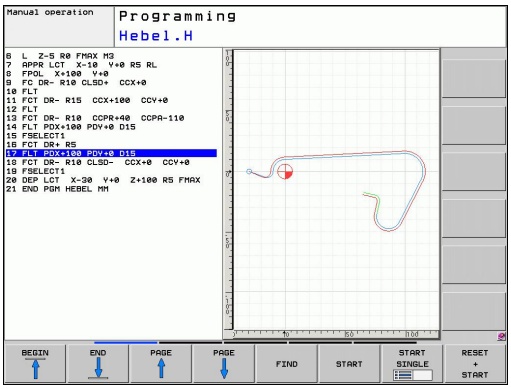

- To switch the screen layout to displaying program blocks to the left and graphics to the right, press the SPLIT SCREEN key and PROGRAM + GRAPHICS soft key

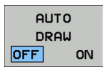

- Set the AUTO DRAW soft key to ON. While you are entering the program lines, the TNC generates each path contour you program in the graphics window in the right screen half

If you do not wish to have the TNC generate graphics during programming, set the AUTO DRAW soft key to OFF.

Even when AUTO DRAW ON is active, graphics are not generated for program section repeats.

Generating a graphic for an existing program

- Use the arrow keys to select the block up to which you want the graphic to be generated, or press GOTO and enter the desired block number

- To generate graphics, press the RESET + START soft key

Additional functions:

Function	Soft key
Generate a complete graphic	RESET + START
Generate programming graphic blockwise	START SINGLE
Generate a complete graphic or complete it after RESET + START	START
Stop the programming graphics. This soft key only appears while the TNC is generating the interactive graphics	STOP

Block number display ON/OFF

- Shift the soft-key row: see figure

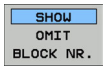

- Show block numbers: Set the SHOW OMIT BLOCK NR. soft key to SHOW
- Hide block numbers: Set the SHOW OMIT BLOCK NR. soft key to OMIT

Erasing the graphic

- Shift the soft-key row: see figure

- Erase graphic: Press CLEAR GRAPHICS soft key

Showing grid lines

- Shift the soft-key row: see figure

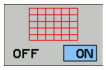

- Show grid lines: Press the "SHOW GRID LINES" soft key

Magnification or reduction of details

You can select the graphics display by selecting a detail with the frame overlay. You can now magnify or reduce the selected detail.

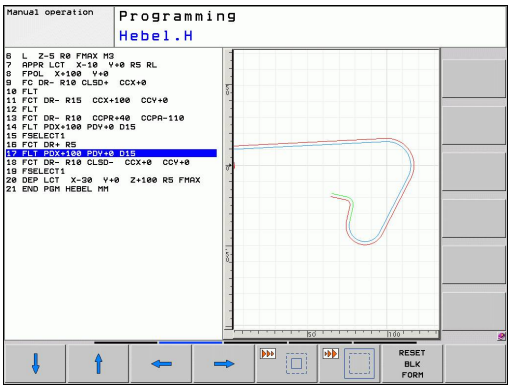

- Select the soft-key row for detail magnification/reduction (second row, see figure)

The following functions are available:

Function	Soft key
Show and move the frame overlay. Press and hold the desired soft key to move the frame overlay	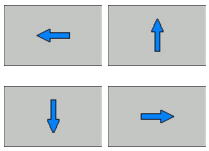
Shrink the frame overlay – Press soft key for shrinking	
Enlarge the frame overlay – Press soft key	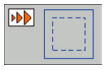

WINDOW DETAIL

- Confirm the selected area with the WINDOW DETAIL soft key

The RESET WORKPIECE BLANK soft key is used to restore the original section.

> If you have connected a mouse you can draw a frame overlay with the left mouse button for the area to be magnified. You can also use the mouse to magnify or shrink the graphics.

4.6 Error messages

Display of errors

The TNC generates error messages when it detects problems such as:

- Incorrect data input
- Logical errors in the program
- Contour elements that are impossible to machine
- Incorrect use of touch probes

When an error occurs, it is displayed in red type in the header. Long and multi-line error messages are displayed in abbreviated form. If an error occurs in the background mode, the word "Error" is displayed in red type. Complete information on all pending errors is shown in the error window.

If a rare "processor check error" should occur, the TNC automatically opens the error window. You cannot remove such an error. Shut down the system and restart the TNC.

The error message is displayed in the header until it is cleared or replaced by a higher-priority error.

An error message that contains a program block number was caused by an error in the indicated block or in the preceding block.

Open the error window

- Press the ERR key. The TNC opens the error window and displays all accumulated error messages.

Closing the error window

- Press the END soft key—or

- Press the ERR key. The TNC closes the error window.

Detailed error messages

The TNC displays possible causes of the error and suggestions for solving the problem:

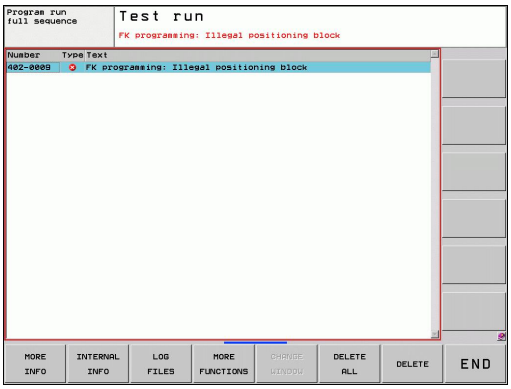

- Open the error window

MORE INFO

- Information on the error cause and corrective action: Position the highlight on the error message and press the MORE INFO soft key. The TNC opens a window with information on the error cause and corrective action
- Exit Info: Press the MORE INFO soft key again

INTERNAL INFO soft key

The INTERNAL INFO soft key supplies information on the error message. This information is only required if servicing is needed.

- Open the error window.

INTERNAL INFO

- Detailed information about the error message: Position the highlight on the error message and press the INTERNAL INFO soft key. The TNC opens a window with internal information about the error
- To exit Details, press the INTERNAL INFO soft key again

Clearing errors

Clearing errors outside of the error window

CE

- Clear the error/message in the header: Press the CE key

> In some operating modes (such as the Editing mode), the CE button cannot be used to clear the error, since the button is reserved for other functions.

Clearing more than one error

- Open the error window

DELETE

- Clear individual errors: Position the highlight on the error message and press the DELETE soft key

DELETE ALL

- Clear all errors: Press the DELETE ALL soft key

> If the cause of the error has not been removed, the error message cannot be deleted. In this case, the error message remains in the window.

Error log

The TNC stores errors and important events (e.g. system startup) in an error log. The capacity of the error log is limited. If the log is full, the TNC uses a second file. If this is also full, the first error log is deleted and written to again, and so on. To view the error history, switch between CURRENT FILE and PREVIOUS FILE.

- Open the error window.

LOG FILES

- Press the LOG FILES soft key.

ERROR LOG

- Open the error log file: Press the ERROR LOG soft key.

PREVIOUS FILE

- If you need the previous log file: Press the PREVIOUS FILE soft key.

CURRENT FILE

- If you need the current log file: Press the CURRENT FILE soft key.

The oldest entry is at the beginning of the error log file, and the most recent entry is at the end.

Keystroke log

The TNC stores keystrokes and important events (e.g. system startup) in a keystroke log. The capacity of the keystroke log is limited. If the keystroke log is full, the control switches to a second keystroke log. If this second file becomes full, the first keystroke log is cleared and written to again, and so on. To view the keystroke history, switch between CURRENT FILE and PREVIOUS FILE.

LOG FILES
- Press the LOG FILES soft key

KEYSTROKE LOG
- Open the keystroke log file: Press the KEYSTROKE LOG FILE soft key

PREVIOUS FILE
- If you need the previous log file: Press the PREVIOUS FILE soft key

CURRENT FILE
- If you need the current log file: Press the CURRENT FILE soft key

The TNC saves each key pressed during operation in a keystroke log. The oldest entry is at the beginning, and the most recent entry is at the end of the file.

Overview of the buttons and soft keys for viewing the log files

Function	Soft key/Keys
Go to beginning of log file	BEGIN
Go to end of log file	END
Current log file	CURRENT FILE
Previous log file	PREVIOUS FILE
Up/down one line	↑ ↓
Return to main menu	

Informational texts

After a faulty operation, such as pressing a key without function or entering a value outside of the valid range, the TNC displays a (green) text in the header, informing you that the operation was not correct. The TNC clears this informational text upon the next valid input.

Saving service files

If necessary, you can save the "Current status of the TNC," and make it available to a service technician for evaluation. A group of service files is saved (error and keystroke log files, as well as other files that contain information about the current status of the machine and the machining).

If you repeat the "Save service files" function with the same file name, the previously saved group of service data files is overwritten. To avoid this, use another file name when you repeat the function.

Saving service files

- Open the error window.

LOG FILES

- Press the LOG FILES soft key.

SAVE SERVICE FILES

- Press the SAVE SERVICE FILES soft key: The TNC opens a pop-up window in which you can enter a name for the service file.

OK

- Save the service files: Press the OK soft key.

Calling the TNCguide help system

You can call the TNC's help system via soft key. Immediately the help system shows you the same error explanation that you receive by pressing the HELP soft key.

If your machine manufacturer also provides a help system, the TNC shows an additional MACHINE MANUFACTURER soft key with which you can call this separate help system. There you will find further, more detailed information on the error message concerned.

- Call the help for HEIDENHAIN error messages

- Call the help for HEIDENHAIN error messages, if available

4.7 TNCguide context-sensitive help system

Application

Before you can use the TNCguide, you need to download the help files from the HEIDENHAIN home page See "Downloading current help files".

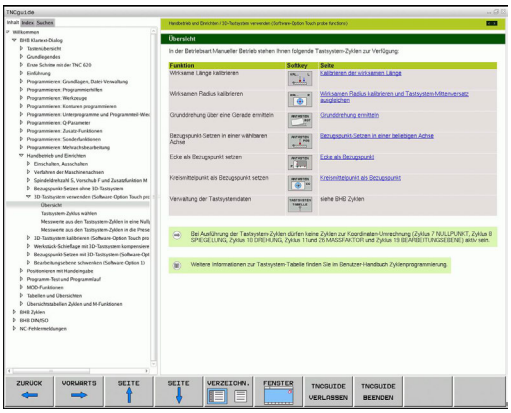

The **TNCguide** context-sensitive help system includes the user documentation in HTML format. The TNCguide is called with the HELP key, and the TNC often immediately displays the information specific to the condition from which the help was called (context-sensitive call). Even if you are editing an NC block and press the HELP key, you are usually brought to the exact place in the documentation that describes the corresponding function.

The TNC always tries to start the TNCguide in the language that you have selected as the conversational language on your TNC. If the files with this language are not yet available on your TNC, it automatically opens the English version.

The following user documentation is available in the TNCguide:

- Conversational Programming User's Manual **(BHBKlartext.chm)**
- DIN/ISO User's Manual **(BHBIso.chm)**
- User's Manual for Cycle Programming (**BHBtchprobe.chm**)
- List of All Error Messages **(errors.chm)**

In addition, the **main.chm** "book" file is available, with the contents of all existing .chm files.

As an option, your machine tool builder can embed machine-specific documentation in the **TNCguide**. These documents then appear as a separate book in the **main.chm** file.

Working with the TNCguide

Calling the TNCguide

There are several ways to start the TNCguide:

- Press the HELP key if the TNC is not already showing an error message
- Click the help symbol at the lower right of the screen beforehand, then click the appropriate soft keys
- Use the file manager to open a help file (.chm file). The TNC can open any .chm file, even if it is not saved on the TNC's hard disk

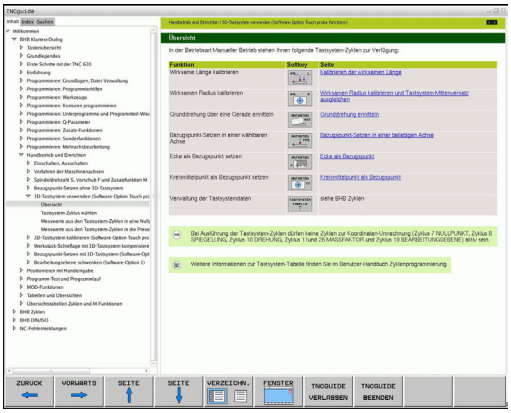

> If one or more error messages are waiting for your attention, the TNC shows the help directly associated with the error messages. To start the **TNCguide,** you first have to acknowledge all error messages.
>
> When the help system is called on the programming station, the TNC starts the internally defined standard browser (usually the Internet Explorer), or otherwise a browser adapted by HEIDENHAIN.

For many soft keys there is a context-sensitive call through which you can go directly to the description of the soft key's function. This functionality requires using a mouse. Proceed as follows:

- Select the soft-key row containing the desired soft key
- Click with the mouse on the help symbol that the TNC displays just above the soft-key row: The mouse pointer turns into a question mark
- Move the question mark to the soft key for which you want an explanation, and click: The TNC opens the TNCguide. If no specific part of the help is assigned to the selected soft key, the TNC opens the book file **main.chm,** in which you can use the search function or the navigation to find the desired explanation manually

Even if you are editing an NC block, context-sensitive help is available:

- Select any NC block
- Use the arrow keys to move the cursor to the block
- Press the HELP key: The TNC starts the help system and shows a description for the active function (does not apply to miscellaneous functions or cycles that were integrated by your machine tool builder)

Navigating in the TNCguide

It's easiest to use the mouse to navigate in the TNCguide. A table of contents appears on the left side of the screen. By clicking the rightward pointing triangle you open subordinate sections, and by clicking the respective entry you open the individual pages. It is operated in the same manner as the Windows Explorer.

Linked text positions (cross references) are shown underlined and in blue. Clicking the link opens the associated page.

Of course you can also operate the TNCguide through keys and soft keys. The following table contains an overview of the corresponding key functions.

Function	Soft key
■ If the table of contents at left is active: Select the entry above it or below it ■ If the text window at right is active: Move the page downward or upward if texts or graphics are not shown completely	↑ ↓
■ If the table of contents at left is active: Open up the table of contents If the branch is at its end, jump into the window at right ■ If the text window at right is active: No function	→
■ If the table of contents at left is active: Close the table of contents ■ If the text window at right is active: No function	←
■ If the table of contents at left is active: Use the cursor key to show the selected page ■ If the text window at right is active: If the cursor is on a link, jump to the linked page	ENT
■ If the table of contents at left is active: Switch the tab between the display of the table of contents, display of the subject index, and the full-text search function and switching to the screen half at right ■ If the text window at right is active: Jump back to the window at left	
■ If the table of contents at left is active: Select the entry above it or below it ■ If the text window at right is active: Jump to next link	
Select the page last shown	BACK ←
Page forward if you have used the "select page last shown" function	FORWARD →
Move up by one page	PAGE ↑
Move down by one page	PAGE ↓

Function	Soft key
Display or hide table of contents	DIRECTORY
Switch between full-screen display and reduced display. With the reduced display you can see some of the rest of the TNC window	WINDOW
The focus is switched internally to the TNC application so that you can operate the control when the TNCguide is open. If the full screen is active, the TNC reduces the window size automatically before the change of focus	TNCGUIDE QUIT
Exiting TNCguide	TNCGUIDE EXIT

Subject index

The most important subjects in the Manual are listed in the subject index (**Index** tab). You can select them directly by mouse or with the cursor keys.

The left side is active.

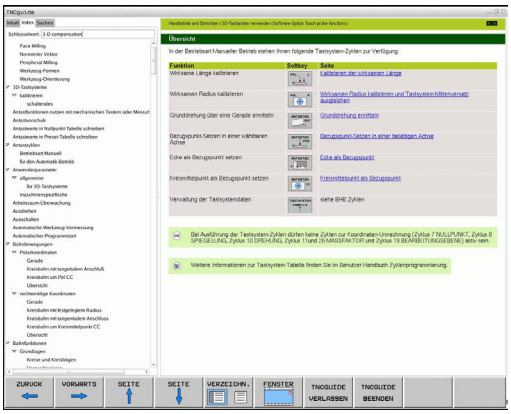

- Select the **Index** tab
- Activate the **Keyword** input field
- Enter the word for the desired subject and the TNC synchronizes the index and creates a list in which you can find the subject more easily, or
- Use the arrow key to highlight the desired keyword
- Use the ENT key to call the information on the selected keyword

> You can enter the search word only with a keyboard connected via USB.

Full-text search

In the **Find** tab you can search the entire TNCguide for a specific word.

The left side is active.

- Select the **Find** tab
- Activate the **Find:** input field
- Enter the desired word and confirm with the ENT key: The TNC lists all sources containing the word
- Use the arrow key to highlight the desired source
- Press the ENT key to go to the selected source

You can enter the search word only with a keyboard connected via USB.

The full-text search only works for single words.

If you activate the **Search only in titles** function (by mouse or by using the cursor and the space key), the TNC searches only through headings and ignores the body text.

Downloading current help files

You'll find the help files for your TNC software on the HEIDENHAIN homepage **www.heidenhain.de** under:

- Documentation and information
- User Documentation
- TNCguide
- Select the desired language
- TNC Controls
- Series, e.g. TNC 600 Series
- Desired NC software number, e.g. TNC 320 (34059x-01)
- Select the desired language version from the **TNCguide online help** table
- Download the ZIP file and unzip it
- Move the unzipped CHM files to the TNC in the **TNC:\tncguide \en** directory or into the respective language subdirectory (see also the following table)

If you want to use TNCremoNT to transfer the CHM files to the TNC, then in the **Extras** >**Configuration** >**Mode** >**Transfer in binary format** menu item you have to enter the extension **.CHM**.

Language	TNC directory
German	**TNC:\tncguide\de**
English	**TNC:\tncguide\en**
Czech	**TNC:\tncguide\cs**
French	**TNC:\tncguide\fr**
Italian	**TNC:\tncguide\it**
Spanish	**TNC:\tncguide\es**
Portuguese	**TNC:\tncguide\pt**
Swedish	**TNC:\tncguide\sv**
Danish	**TNC:\tncguide\da**
Finnish	**TNC:\tncguide\fi**
Dutch	**TNC:\tncguide\nl**
Polish	**TNC:\tncguide\pl**
Hungarian	**TNC:\tncguide\hu**
Russian	**TNC:\tncguide\ru**
Chinese (simplified)	**TNC:\tncguide\zh**
Chinese (traditional)	**TNC:\tncguide\zh-tw**
Slovenian (software option)	**TNC:\tncguide\sl**
Norwegian	**TNC:\tncguide\no**
Slovak	**TNC:\tncguide\sk**
Latvian	**TNC:\tncguide\lv**
Korean	**TNC:\tncguide\kr**
Estonian	**TNC:\tncguide\et**
Turkish	**TNC:\tncguide\tr**
Romanian	**TNC:\tncguide\ro**
Lithuanian	**TNC:\tncguide\lt**

5

Programming: Tools

5.1 Entering tool-related data

Feed rate F

The feed rate **F** is the speed (in millimeters per minute or inches per minute) at which the tool center point moves. The maximum feed rates can be different for the individual axes and are set in machine parameters.

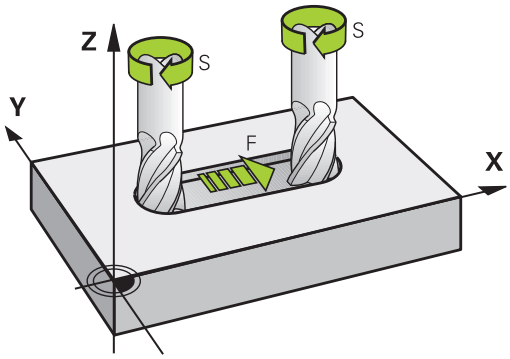

Input

You can enter the feed rate in the **TOOL CALL** block and in every positioning block (See "Creating the program blocks with the path function keys", page 172). In millimeter-programs you enter the feed rate in mm/min, and in inch-programs, for reasons of resolution, in 1/10 inch/min.

Rapid traverse

If you wish to program rapid traverse, enter **F MAX.** To enter **FMAX,** press the ENT key or the FMAX soft key when the dialog question **FEED RATE F = ?** appears on the control's screen.

> To move your machine at rapid traverse, you can also program the corresponding numerical value, e.g. **F30000**. Unlike **FMAX,** this rapid traverse remains in effect not only in the individual block but in all blocks until you program a new feed rate.

Duration of effect

A feed rate entered as a numerical value remains in effect until a block with a different feed rate is reached. **FMAX** is only effective in the block in which it is programmed. After the block with **FMAX** is executed, the feed rate will return to the last feed rate entered as a numerical value.

Changing during program run

You can adjust the feed rate during program run with the feed-rate override knob F.

Spindle speed S

The spindle speed S is entered in revolutions per minute (rpm) in a **TOOL CALL** block. Instead, you can also define the cutting speed Vc in m/min.

Programmed change

In the part program, you can change the spindle speed in a **TOOL CALL** block by entering the spindle speed only:

TOOL CALL

- Program a tool call: Press the TOOL CALL key
- Ignore the dialog question for **Tool number ?** with the NO ENT key
- Ignore the dialog question for **Working spindle axis X/Y/Z ?** with the NO ENT key
- Enter the new spindle speed for the dialog question **Spindle speed S= ?,** and confirm with END, or switch via the VC soft key to entry of the cutting speed.

Changing during program run

You can adjust the spindle speed during program run with the spindle speed override knob S.

5.2 Tool data

Requirements for tool compensation

You usually program the coordinates of path contours as they are dimensioned in the workpiece drawing. To allow the TNC to calculate the tool center path—i.e. the tool compensation—you must also enter the length and radius of each tool you are using.

Tool data can be entered either directly in the part program with **TOOL DEF** or separately in a tool table. In a tool table, you can also enter additional data for the specific tool. The TNC will consider all the data entered for the tool when executing the part program.

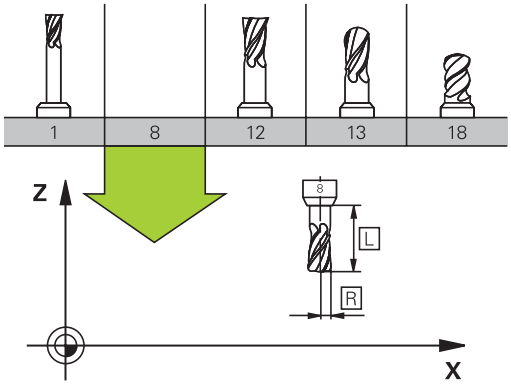

Tool number, tool name

Each tool is identified by a number between 0 and 32767. If you are working with tool tables, you can also enter a tool name for each tool. Tool names can have up to 32 characters.

The tool number 0 is automatically defined as the zero tool with the length L=0 and the radius R=0. In tool tables, tool T0 should also be defined with L=0 and R=0.

Tool length L

You should always enter the tool length L as an absolute value based on the tool reference point. The entire tool length is essential for the TNC in order to perform numerous functions involving multi-axis machining.

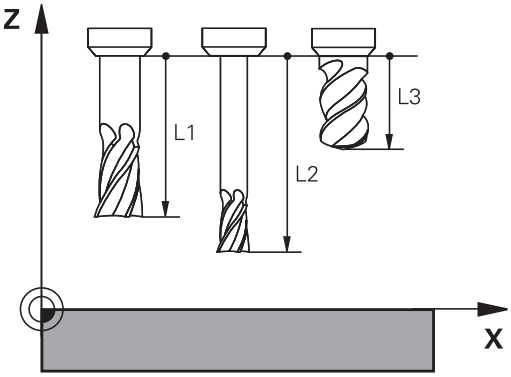

Tool radius R

You can enter the tool radius R directly.

Delta values for lengths and radii

Delta values are offsets in the length and radius of a tool.

A positive delta value describes a tool oversize (**DL**, **DR**, **DR2**>0). If you are programming the machining data with an allowance, enter the oversize value in the **TOOL CALL** block of the part program.

A negative delta value describes a tool undersize (**DL**, **DR**, **DR2**<0). An undersize is entered in the tool table for wear.

Delta values are usually entered as numerical values. In a **TOOL CALL** block, you can also assign the values to Q parameters.

Input range: You can enter a delta value with up to ± 99.999 mm.

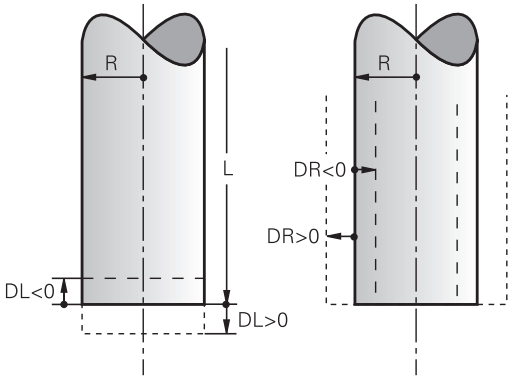

> Delta values from the tool table influence the graphical representation of the **tool**. The representation of the **workpiece** remains the same in the simulation.
>
> Delta values from the **TOOL CALL** block change the represented size of the **workpiece** during the simulation. The simulated **tool size** remains the same.

Entering tool data into the program

The number, length and radius of a specific tool is defined in the **TOOL DEF** block of the part program.

- Select the tool definition: Press the TOOL DEF key

TOOL DEF

- **Tool number**: Each tool is uniquely identified by its tool number
- **Tool length**: Compensation value for the tool length
- **Tool radius**: Compensation value for the tool radius

> In the programming dialog, you can transfer the value for tool length and tool radius directly into the input line by pressing the desired axis soft key.

Example

```
4 TOOL DEF 5 L+10 R+5
```

Enter tool data into the table

You can define and store up to 9999 tools and their tool data in a tool table. Also see the Editing Functions later in this Chapter. In order to be able to assign various compensation data to a tool (indexing tool number), insert a line and extend the tool number by a dot and a number from 1 to 9 (e.g. **T 5.2**).

You must use tool tables if

- you wish to use indexed tools such as stepped drills with more than one length compensation value
- your machine tool has an automatic tool changer
- you want to rough-mill the contour with Cycle 22, (see "User's Manual for Cycle Programming, ROUGH-OUT")
- you want to work with Cycles 251 to 254 (see "User's Manual for Cycle Programming," Cycles 251 to 254)

If you create or manage further tool tables, the file name has to start with a letter.

You can select either list view or form view for tables via the "Screen layout" key.

When you open the tool table you can also change its layout.

Tool table: Standard tool data

Abbr.	Inputs	Dialog
T	Number by which the tool is called in the program (e.g. 5, indexed: 5.2)	-
NAME	Name by which the tool is called in the program (no more than 32 characters, all capitals, no spaces)	**Tool name?**
L	Compensation value for tool length L	**Tool length?**
R	Compensation value for the tool radius R	**Tool radius R?**
R2	Tool radius R2 for toroid cutters (only for 3-D radius compensation or graphical representation of a machining operation with spherical or toroid cutters)	**Tool radius R2?**
DL	Delta value for tool length L	**Tool length oversize?**
DR	Delta value for tool radius R	**Tool radius oversize?**
DR2	Delta value for tool radius R2	**Tool radius oversize R2?**
LCUTS	Tooth length of the tool for Cycle 22	**Tooth length in the tool axis?**
ANGLE	Maximum plunge angle of the tool for reciprocating plunge-cut in Cycles 22 and 208	**Maximum plunge angle?**
TL	Set tool lock (**TL**: for Tool Locked	**Tool locked?** **Yes = ENT / No = NO ENT**
RT	Number of a replacement tool, if available (**RT**: for Replacement Tool; see also **TIME2**).	**Replacement tool?**
TIME1	Maximum tool life in minutes. This function can vary depending on the individual machine tool. Your machine manual provides more information	**Maximum tool age?**
TIME2	Maximum tool life in minutes during **TOOL CALL**: If the current tool life reaches or exceeds this value, the TNC changes the tool during the next **TOOL CALL** (see also **CUR_TIME**).	**Maximum tool age for TOOL CALL?**
CUR_TIME	Current age of the tool in minutes: The TNC automatically counts the current tool life (**CUR_TIME**: for **CUR**rent **TIME**. A starting value can be entered for used tools	**Current tool age?**

Abbr.	Inputs	Dialog
TYPE	Tool type: Press the SELECT TYPE (3rd soft-key row); the TNC superimposes a window where you can select the type of tool you want. You can assign tool types to specify the display filter settings such that only the selected type is visible in the table	**Tool type?**
DOC	Comment on tool (up to 32 characters)	**Tool comment?**
PLC	Information on this tool that is to be sent to the PLC	**PLC status?**
PTYP	Tool type for evaluation in the pocket table	**Tool type for pocket table?**
NMAX	Limit the spindle speed for this tool. The programmed value is monitored (error message) as well as an increase in the shaft speed via the potentiometer. Function inactive: Enter **-**. **Input range**: 0 to +999999, if function not active: enter **-**	**Maximum speed [rpm]?**
LIFTOFF	Definition of whether the TNC should retract the tool in the direction of the positive tool axis at an NC stop in order to avoid leaving dwell marks on the contour. If **Y** is defined, the TNC retracts the tool from the contour, provided that this function was activated in the NC program with M148 See "Automatically retract tool from the contour at an NC stop: M148", page 323.	**Retract tool Y/N ?**
TP_NO	Reference to the number of the touch probe in the touch-probe table	**Number of the touch probe**
T_ANGLE	Point angle of the tool. Is used by the Centering cycle (Cycle 240) in order to calculate the centering depth from the diameter entry	**Point angle?**
LAST_USE	Date and time that the tool was last inserted via **TOOL CALL** **Input range**: Max. 16 characters, format specified internally: Date = yyyy.mm.dd, time = hh.mm	**LAST_USE**

Tool table: Tool data required for automatic tool measurement

For a description of the cycles for automatic tool measurement, see the User's Manual for Cycle Programming.

Abbr.	Inputs	Dialog
CUT	Number of teeth (20 teeth maximum)	**Number of teeth?**
LTOL	Permissible deviation from tool length L for wear detection. If the entered value is exceeded, the TNC locks the tool (status **L**). Input range: 0 to 0.9999 mm	**Wear tolerance: length?**
RTOL	Permissible deviation from tool radius R for wear detection. If the entered value is exceeded, the TNC locks the tool (status **L**). Input range: 0 to 0.9999 mm	**Wear tolerance: radius?**
R2TOL	Permissible deviation from tool radius R2 for wear detection. If the entered value is exceeded, the TNC locks the tool (status **L**). Input range: 0 to 0.9999 mm	**Wear tolerance: Radius 2?**
DIRECT.	Cutting direction of the tool for measuring the tool during rotation	**Cutting direction (M3 = -)?**
R_OFFS	Tool radius measurement: Tool offset between stylus center and tool center. Default setting: No value entered (offset = tool radius)	**Tool offset: radius?**
L_OFFS	Tool length measurement: Tool offset in addition to **offsetToolAxis** (114104) between upper surface of stylus and lower surface of tool. Default: 0	**Tool offset: length?**
LBREAK	Permissible deviation from tool length **L** for breakage detection. If the entered value is exceeded, the TNC locks the tool (status **L**). Input range: 0 to 0.9999 mm	**Breakage tolerance: length?**
RBREAK	Permissible deviation from tool radius R for breakage detection. If the entered value is exceeded, the TNC locks the tool (status **L**). Input range: 0 to 0.9999 mm	**Breakage tolerance: radius?**

Edit the tool table

The tool table that is active during execution of the part program is designated TOOL.T and must be saved in the **TNC:\table** directory.

Other tool tables that are to be archived or used for test runs are given any other names with the extension T. By default, for Test Run and Programming modes the TNC uses the "simtool.t" table, which is also stored in the "table" directory. In the Test Run mode, press the TOOL TABLE soft key to edit it.

To open the tool table TOOL.T:

- Select any machine operating mode

- Select the tool table: Press the TOOL TABLE soft key

- Set the EDIT soft key to ON

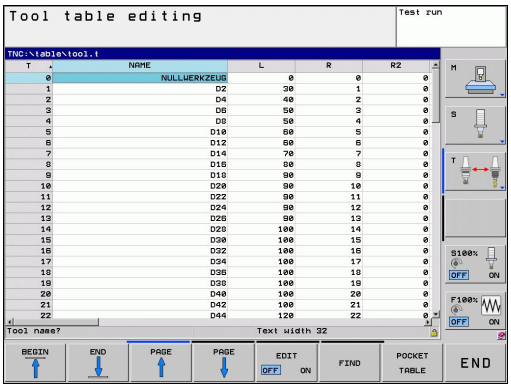

Displaying only specific tool types (filter setting)

- Press the TABLE FILTER soft key (fourth soft-key row)
- Select the tool type by pressing a soft key: The TNC only shows tools of the type selected
- Cancel filter: Press the previously selected tool type again or select another tool type

The machine tool builder adapts the features of the filter function to the requirements of your machine. Refer to your machine manual.

Hiding or sorting the tool table columns

You can adapt the layout of the tool table to your needs. Columns that should not be displayed can be hidden:

- Press the SORT/HIDE COLUMNS soft key (fourth soft-key row)
- Select the appropriate column name with the arrow key
- Press the HIDE COLUMN soft key to remove this column from the table layout

You can also modify the sequence of columns in the table:

- You can also modify the sequence of columns in the table with the "Move to" dialog. The entry highlighted in **Available columns** is moved in front of this column

You can use a connected mouse or the TNC keyboard to navigate in the form. Navigation using the TNC keyboard:

- Press the navigation keys to go to the input fields. Use the arrow keys to navigate within an input field. To open pop-down menus, press the GOTO key.

With the Fix number of columns function, you can define how many columns (0 -3) are fixed to the left screen edge. These columns are also displayed if you navigate in the table to the right.

Opening any other tool table

- Select the Programming mode of operation

PGM MGT

- Call the file manager
- Press the SELECT TYPE soft key to select the file type
- Show type .T files: Press the SHOW .T soft key
- Select a file or enter a new file name. Conclude your entry with the ENT key or the SELECT soft key

When you have opened the tool table, you can edit the tool data by moving the cursor to the desired position in the table with the arrow keys or the soft keys. You can overwrite the stored values, or enter new values at any position. The available editing functions are illustrated in the table below.

If the TNC cannot show all positions in the tool table in one screen page, the highlight bar at the top of the table will display the symbol "**>>**" or "**<<**".

Editing functions for tool tables	Soft key
Select beginning of table	BEGIN
Select end of table	END
Select previous page in table	PAGE
Select next page in table	PAGE
Find the text or number	FIND
Move to beginning of line	BEGIN LINE
Move to end of line	END LINE
Copy highlighted field	COPY FIELD
Insert copied field	PASTE FIELD
Add the entered number of lines (tools) at the end of the table	APPEND N LINES
Adding a row with tool number for entering	INSERT LINE
Delete current line (tool)	DELETE LINE
Sort the tools according to the content of a column	SORT
Show all drills in the tool table	DRILL
Show all cutters in the tool table	CUTTER
Show all taps/thread cutters in the tool table	TAP/ THREAD CUTTER
Show all touch probes in the tool table	TOUCH PROBE

Exiting the tool table

- Call the file manager and select a file of a different type, such as a part program

Importing tool tables

The machine manufacturer can adapt the IMPORT TABLE function. Refer to your machine manual.

If you export a tool table from an iTNC 530 and import it into a TNC 320, you have to adapt its format and content before you can use the tool table. On the TNC 320, you can adapt the tool table conveniently with the IMPORT TABLE function. The TNC converts the contents of the imported tool table to a format valid for the TNC 320 and saves the changes to the selected file. Follow this procedure:

- Save the tool table of the iTNC 530 to the **TNC:\table** directory
- Select the Programming mode of operation
- Call the file manager: Press the PGM MGT key
- Move the highlight to the tool table you want to import
- Press the MORE FUNCTIONS soft key
- Select the IMPORT TABLE soft key: The TNC inquires whether you really want to overwrite the selected tool table
- Press the CANCEL soft key if you do not want to overwrite the file, or
- Press the ADAPT TABLE FORMAT soft key to overwrite the file
- Open the converted table and check its contents

The following characters are permitted in the **Name** column of the tool table: "ABCDEFGHIJKLMNOPQRSTUVWXYZ0123456789# $&-._". The TNC changes a comma in the tool name to a period during import.

The TNC overwrites the selected tool table when running the IMPORT TABLE function. The TNC also creates a backup file with the extension **.t.bak**. To avoid losing data, be sure to make a backup copy of your original tool table before importing it!

The procedure for copying tool tables using the TNC file manager is described in the section on file management (See "Copying a table").

When tool tables of the iTNC 530 are imported, the TYPE column is not imported.

Pocket table for tool changer

The machine tool builder adapts the features of the pocket table to the requirements of your machine. Refer to your machine manual.

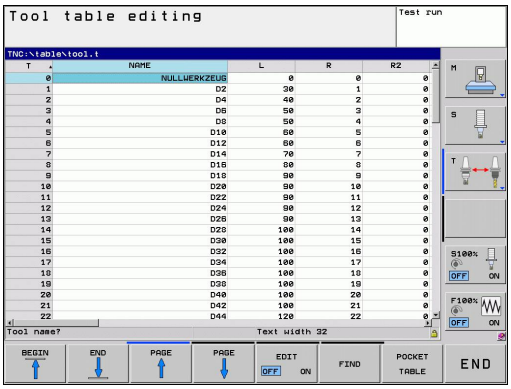

For automatic tool changing you need the a pocket table. You manage the assignment of your tool changer in the pocket table. The pocket table is in the **TNC:\TABLE** directory. The machine tool builder can adapt the name, path and content of the pocket table. You can also select various layouts using soft keys in the **TABLE FILTER** menu.

Editing a pocket table in a Program Run operating mode

- Select the tool table: Press the TOOL TABLE soft key

- Select the pocket table: Press the POCKET TABLE soft key

- Set the EDIT soft key to ON. On your machine this might not be necessary or even possible. Refer to your machine manual

Selecting a pocket table in the Programming mode of operation

PGM MGT

- Call the file manager
- Display the file types: Press the SHOW ALL soft key
- Select a file or enter a new file name. Conclude your entry with the ENT key or the SELECT soft key

Abbr.	Inputs	Dialog
P	Pocket number of the tool in the tool magazine	-
T	Tool number	**Tool number?**
RSV	Pocket reservation for box magazines	**Pocket reserv.: Yes = ENT / No = NOENT**
ST	Special tool (**ST**); If your special tool blocks pockets in front of and behind its actual pocket, these additional pockets need to be locked in column L (status L).	**Special tool?**
F	The tool is always returned to the same pocket in the tool magazine	**Fixed pocket? Yes = ENT / No = NO ENT**
L	Locked pocket (see also column ST)	**Pocket locked Yes = ENT / No = NO ENT**
DOC	Display of the comment to the tool from TOOL.T	-
PLC	Information on this tool pocket that is to be sent to the PLC	**PLC status?**
P1 ... P5	Function is defined by the machine tool builder. The machine tool documentation provides further information	**Value?**
PTYP	Tool type. Function is defined by the machine tool builder. The machine tool documentation provides further information	**Tool type for pocket table?**
LOCKED_ABOVE	Box magazine: Lock the pocket above	**Lock the pocket above?**
LOCKED_BELOW	Box magazine: Lock the pocket below	**Lock the pocket below?**
LOCKED_LEFT	Box magazine: Lock the pocket at left	**Lock the pocket at left?**
LOCKED_RIGHT	Box magazine: Lock the pocket at right	**Lock the pocket at right?**

Editing functions for pocket tables	Soft key
Select beginning of table	BEGIN
Select end of table	END
Select previous page in table	PAGE
Select next page in table	PAGE
Reset pocket table	RESET POCKET TABLE
Reset tool number column T	RESET COLUMN T
Go to beginning of the line	BEGIN LINE
Go to end of the line	END LINE
Simulate a tool change	SIMULATED TOOL CHANGE
Select a tool from the tool table: The TNC shows the contents of the tool table. Use the arrow keys to select a tool, press OK to transfer it to the pocket table	SELECT
Edit the current field	EDIT CURRENT FIELD
Sort the view	SORT

The machine manufacturer defines the features, properties and designations of the various display filters. Refer to your machine manual.

Call tool data

A TOOL CALL block in the part program is defined with the following data:

- Select the tool call function with the TOOL CALL key

TOOL CALL

- **Tool number**: Enter the number or name of the tool. The tool must already be defined in a **TOOL DEF** block or in the tool table. Press the TOOL NAME soft key to enter the name. The TNC automatically places the tool name in quotation marks. The tool name always refers to the entry in the active tool table TOOL.T. If you wish to call a tool with other compensation values, also enter the index you defined in the tool table after the decimal point. There is a SELECT soft key for calling a window from which you can select a tool defined in the tool table TOOL.T directly without having to enter the number or name.
- **Working spindle axis X/Y/Z**: Enter the tool axis
- **Spindle speed S**: Enter the spindle speed in rpm Alternatively, you can define the cutting speed Vc in m/min. Press the VC soft key
- **Feed rate F**: F [mm/min or 0.1 inch/min] is effective until you program a new feed rate in a positioning or **TOOL CALL** block
- **Tool length oversize DL**: Enter the delta value for the tool length
- **Tool radius oversize DR**: Enter the delta value for the tool radius
- **Tool radius oversize DR2**: Enter the delta value for the tool radius 2

Example: Tool call

Call tool number 5 in the tool axis Z with a spindle speed of 2500 rpm and a feed rate of 350 mm/min. The tool length is to be programmed with an oversize of 0.2 mm, the tool radius 2 with an oversize of 0.05 mm, and the tool radius with an undersize of 1 mm.

```
20 TOOL CALL 5.2 Z S2500 F350 DL+0.2 DR-1 DR2+0.05
```

The character **D** preceding **L** and **R** designates delta values.

Tool preselection with tool tables

If you are working with tool tables, use **TOOL DEF** to preselect the next tool. Simply enter the tool number or a corresponding Q parameter, or type the tool name in quotation marks.

Tool change

The tool change function can vary depending on the individual machine tool. Refer to your machine manual.

Tool change position

The tool change position must be approachable without collision. Use the miscellaneous functions **M91** and **M92** to enter machine-based (rather than workpiece-based) coordinates for the tool change position. If **TOOL CALL 0** is programmed before the first tool call, the TNC moves the tool spindle in the tool axis to a position that is independent of the tool length.

Manual tool change

To change the tool manually, stop the spindle and move the tool to the tool change position:

- Move to the tool change position under program control
- Interrupt program run (See "Interrupt machining", page 454)
- Change the tool
- Resume program run (See "Resuming program run after an interruption", page 455)

Automatic tool change

If your machine tool has automatic tool changing capability, the program run is not interrupted. When the TNC reaches a **TOOL CALL** it replaces the inserted tool by another from the tool magazine.

Automatic tool change if the tool life expires: M101

The function of **M101** can vary depending on the individual machine tool. Refer to your machine manual.

When the specified tool life has expired, the TNC can automatically insert a replacement tool and continue machining with it. Activate the miscellaneous function **M101** for this. **M101** is reset with **M102.**

Enter the respective tool life after which machining is to be continued with a replacement tool in the **TIME2** column of the tool table. In the **CUR_TIME** column the TNC enters the current tool life. If the current tool life is higher than the value entered in the **TIME2** column, a replacement tool will be inserted at the next possible point in the program no later than one minute after expiration of the tool life. The change is made only after the NC block has been completed.

The TNC performs the automatic tool change at a suitable point in the program. The automatic tool change is not performed:

- During execution of machining cycles
- While radius compensation is active (**RR**/**RL**)
- Directly after an approach function **APPR**
- Directly before a departure function **DEP**
- Directly before and after **CHF** and **RND**
- During execution of macros
- During execution of a tool change
- Directly after a **TOOL CALL** or **TOOL DEF**
- During execution of SL cycles

! **Caution: Danger to the workpiece and tool!**
Switch off the automatic tool change with **M102** if you are working with special tools (e.g. side mill cutter) because the TNC at first always moves the tool away from the workpiece in tool axis direction.

Depending on the NC program, the machining time can increase as a result of the tool life verification and calculation of the automatic tool change. You can influence this with the optional input element **BT** (block tolerance)

If you enter the **M101** function, the TNC continues the dialog by requesting the **BT**. Here you define the number of NC blocks (1 - 100) by which the automatic tool change may be delayed. The resulting time period by which the tool change is delayed depends on the content of the NC blocks (e.g. feed rate, path). If you do not define **BT**, the TNC uses the value 1 or, if applicable, a default value defined by the machine manufacturer.

The more you increase the value of **BT**, the smaller will be the effect of an extended program duration through **M101**. Please note that this will delay the automatic tool change!

To calculate a suitable initial value for **BT**, use the following formula: **BT = 10 : average machining time of an NC block in seconds**. Round up to the next odd integer. If the calculated result is greater than 100, use the maximum input value of 100.

If you want to reset the current age of a tool (e.g. after changing the indexable inserts), enter the value 0 in the CUR_TIME column.

The **M101** function is not available for turning tools and in turning mode.

Prerequisites for NC blocks with surface-normal vectors and 3-D compensation

The active radius (**R** + **DR**) of the replacement tool must not differ from the radius of the original tool. You can enter the delta values (**DR**) either in the tool table or in the **TOOL CALL** block. If there are any deviations, the TNC displays an error message and does not replace the tool. You can suppress this message with the M function **M107,** and reactivate it with **M108.**See also: Three-dimensional tool compensation (software option 2).

Tool usage test

The tool usage test function must be enabled by your machine manufacturer. Refer to your machine manual.

In order to run a tool usage test, the complete plain-language program must have been simulated in the **Test Run** mode.

Applying the tool usage test

Before starting a program in the Program Run mode of operation, you can use the TOOL USAGE and TOOL USAGE TEST soft keys to check whether the tools being used in the selected program are available and have sufficient remaining service life. The TNC then compares the actual service-life values in the tool table with the nominal values from the tool usage file.

After you have pressed the TOOL USAGE TEST soft key, the TNC displays the result of the tool usage test in a pop-up window. To close the pop-up window, press the ENT key.

The TNC saves the tool usage times in a separate file with the extension **pgmname.H.T.DEP**. The generated tool usage file contains the following information:

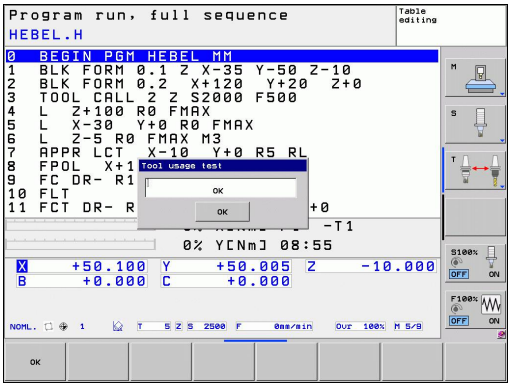

Column	Meaning
TOKEN	■ **TOOL**: Tool usage time per **TOOL CALL**. The entries are listed in chronological order. ■ **TTOTAL**: Total usage time of a tool ■ **STOTAL**: Call of a subprogram; the entries are listed in chronological order ■ **TIMETOTAL**: The total machining time of the NC program is entered in the **WTIME** column. In the **PATH** column the TNC saves the path name of the corresponding NC programs. The **TIME** column shows the sum of all **TIME** entries (without rapid traverse). The TNC sets all other columns to 0 ■ **TOOLFILE**: In the **PATH** column, the TNC saves the path name of the tool table with which you conducted the Test Run. This enables the TNC during the actual tool usage test to detect whether you performed the test run with the TOOL.T
TNR	Tool number (**-1**: No tool inserted yet)
IDX	Tool index
NAME	Tool name from the tool table
TIME	Tool-usage time in seconds (feed time)
WTIME	Tool-usage time in seconds (total usage time between tool changes)

Column	Meaning
RAD	**Tool radius R** + **Oversize of tool radius DR** from the tool table. (in mm)
BLOCK	Block number in which the **TOOL CALL** block was programmed
PATH	■ **TOKEN** = **TOOL**: Path name of the active main program or subprogram ■ **TOKEN** = **STOTAL**: Path name of the subprogram
T	Tool number with tool index
OVRMAX	Maximum feed rate override that occurred during machining. During Test Run the TNC enters the value 100 (%)
OVRMIN	Minimum feed rate override that occurred during machining. During Test Run the TNC enters the value –1
NAMEPROG	■ 0: The tool number is programmed ■ 1: The tool name is programmed

There are two ways to run a tool usage test for a pallet file:

- The highlight in the pallet file is on a pallet entry: The TNC runs the tool usage test for the entire pallet
- The highlight in the pallet file is on a pallet entry: The TNC runs the tool usage test for the entire pallet

5.3 Tool compensation

Introduction

The TNC adjusts the spindle path in the spindle axis by the compensation value for the tool length. In the working plane, it compensates the tool radius.

If you are writing the part program directly on the TNC, the tool radius compensation is effective only in the working plane. The TNC accounts for the compensation value in up to five axes including the rotary axes.

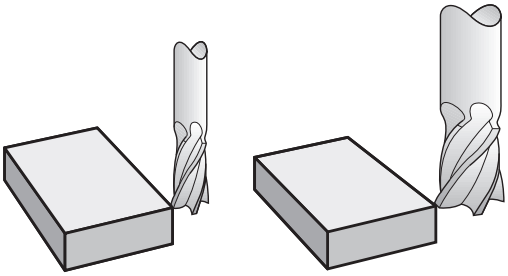

Tool length compensation

Length compensation becomes effective automatically as soon as a tool is called. To cancel length compensation, call a tool with the length L=0.

> **!** **Danger of collision!**
> If you cancel a positive length compensation with **TOOL CALL 0** the distance between tool and workpiece will be reduced.
> After **TOOL CALL** the path of the tool in the spindle axis, as entered in the part program, is adjusted by the difference between the length of the previous tool and that of the new one.

For tool length compensation, the control takes the delta values from both the **TOOL CALL** block and the tool table into account:

Compensation value = **L** + $\mathbf{DL}_{\text{TOOL CALL}}$ + $\mathbf{DL}_{\text{TAB}}$ with

L:	Tool length **L** from the **TOOL DEF** block or tool table
$\mathbf{DL}_{\text{TOOL CALL}}$:	Oversize for length **DL** in the **TOOL CALL 0** block
$\mathbf{DL}_{\text{TAB}}$:	Oversize for length **DL** in the tool table

Tool radius compensation

The block for programming a tool movement contains:

- **RL** or **RR** for radius compensation
- **R0** if there is no radius compensation

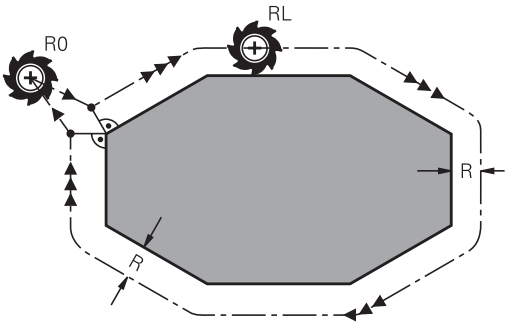

Radius compensation becomes effective as soon as a tool is called and is moved with a straight line block in the working plane with **RL** or **RR**.

> The TNC automatically cancels radius compensation if you:
> - program a straight line block with **R0**
> - depart the contour with the **DEP** function
> - program a **PGM CALL**
> - Select a new program with PGM MGT

For radius compensation, the TNC takes the delta values from both the **TOOL CALL** block and the tool table into account:

Compensation value = **R** + $\mathbf{DR}_{\text{TOOL CALL}}$ + $\mathbf{DR}_{\text{TAB}}$ where

R:	Tool radius **R** from the **TOOL DEF** block or tool table
$\mathbf{DR}_{\text{TOOL CALL}}$:	Oversize for radius **DR** in the **TOOL CALL** block
$\mathbf{DR}_{\text{TAB}}$:	Oversize for radius **DR** in the tool table

Contouring without radius compensation: R0

The tool center moves in the working plane along the programmed path or to the programmed coordinates.

Applications: Drilling and boring, pre-positioning

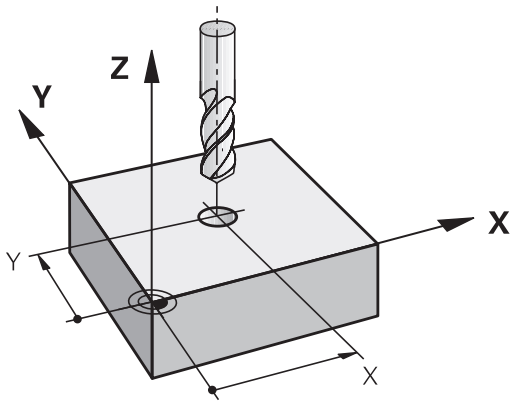

Contouring with radius compensation: RR and RL

RR: The tool moves to the right of the programmed contour

RL: The tool moves to the left of the programmed contour

The tool center moves along the contour at a distance equal to the radius. "Right" or "left" are to be understood as based on the direction of tool movement along the workpiece contour. See figures.

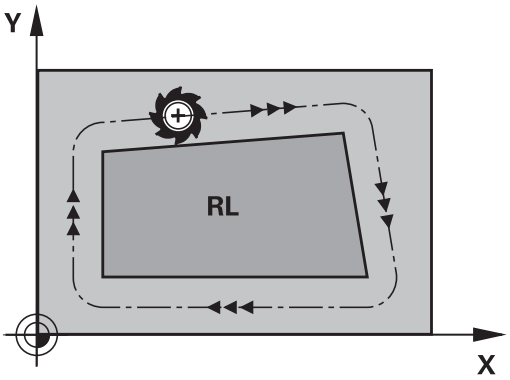

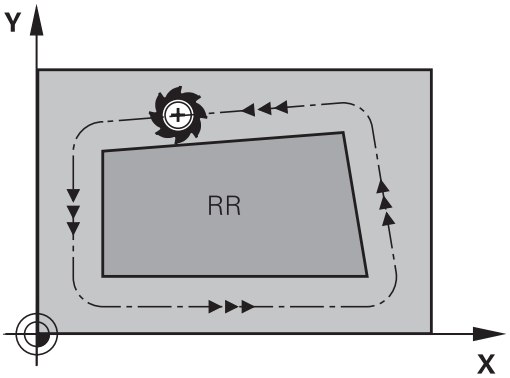

> Between two program blocks with different radius compensations **RR** and **RL** you must program at least one traversing block in the working plane without radius compensation (that is, with **R0**).
>
> The TNC does not put radius compensation into effect until the end of the block in which it is first programmed.
>
> In the first block in which radius compensation is activated with **RR/RL** or canceled with **R0** the TNC always positions the tool perpendicular to the programmed starting or end position. Position the tool at a sufficient distance from the first or last contour point to prevent the possibility of damaging the contour.

Entering radius compensation

Radius compensation is entered in an **L** block. Enter the coordinates of the target point and confirm your entry with ENT

RADIUS COMP.: RL/RR/NO COMP.?

RL
- Select tool movement to the left of the contour: Press the RL soft key, or

RR
- Select tool movement to the right of the contour: Press the RR soft key, or

ENT
- Select tool movement without radius compensation or cancel radius compensation: Press the ENT key

END
- Terminate the block: Press the END key

Radius compensation: Machining corners

- Outside corners:
  If you program radius compensation, the TNC moves the tool around outside corners on a transitional arc. If necessary, the TNC reduces the feed rate at outside corners to reduce machine stress, for example at very great changes of direction.
- Inside corners:
  The TNC calculates the intersection of the tool center paths at inside corners under radius compensation. From this point it then starts the next contour element. This prevents damage to the workpiece at the inside corners. The permissible tool radius, therefore, is limited by the geometry of the programmed contour.

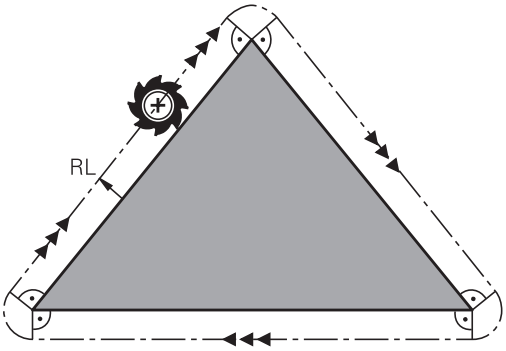

! **Danger of collision!**
To prevent the tool from damaging the contour, be careful not to program the starting or end position for machining inside corners at a corner of the contour.

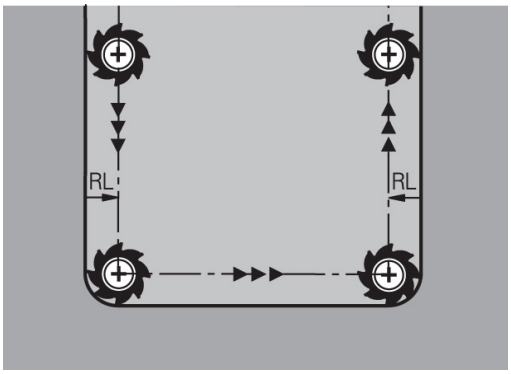

6

Programming: Programming contours

6.1 Tool movements

Path functions

A workpiece contour is usually composed of several contour elements such as straight lines and circular arcs. With the path functions, you can program the tool movements for **straight lines** and **circular arcs**.

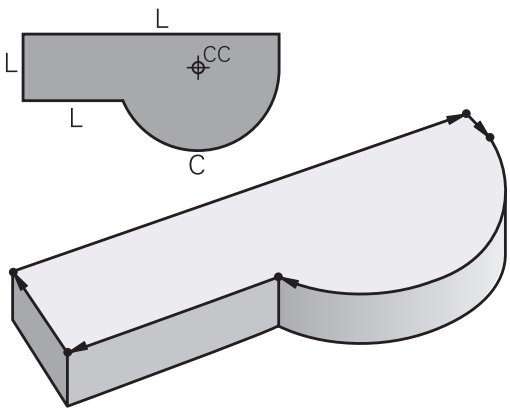

FK free contour programming

If a production drawing is not dimensioned for NC and the dimensions given are not sufficient for creating a part program, you can program the workpiece contour with the FK free contour programming. The TNC calculates the missing data.

With FK programming, you also program tool movements for **straight lines** and **circular arcs**.

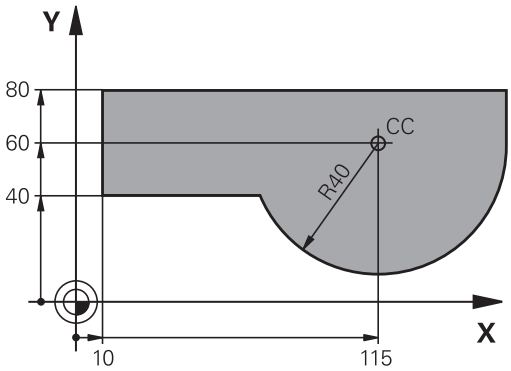

Miscellaneous functions M

With the TNC's miscellaneous functions you can affect

- the program run, e.g., a program interruption
- the machine functions, such as switching spindle rotation and coolant supply on and off
- the path behavior of the tool

Subprograms and program section repeats

If a machining sequence occurs several times in a program, you can save time and reduce the chance of programming errors by entering the sequence once and then defining it as a subprogram or program section repeat. If you wish to execute a specific program section only under certain conditions, you also define this machining sequence as a subprogram. In addition, you can have a part program call a separate program for execution.

Programming with subprograms and program section repeats is described in Chapter 7.

Programming with Q parameters

Instead of programming numerical values in a part program, you enter markers called Q parameters. You assign the values to the Q parameters separately with the Q parameter functions. You can use the Q parameters for programming mathematical functions that control program execution or describe a contour.

In addition, parametric programming enables you to measure with the 3-D touch probe during program run.

Programming with Q parameters is described in Chapter 8.

6.2 Fundamentals of Path Functions

Programming tool movements for workpiece machining

You create a part program by programming the path functions for the individual contour elements in sequence. You usually do this by entering **the coordinates of the end points of the contour elements** given in the production drawing. The TNC calculates the actual path of the tool from these coordinates, and from the tool data and radius compensation.

The TNC moves all axes programmed in a single block simultaneously.

Movement parallel to the machine axes

The program block contains only one coordinate. The TNC thus moves the tool parallel to the programmed axis.

Depending on the individual machine tool, the part program is executed by movement of either the tool or the machine table on which the workpiece is clamped. Nevertheless, you always program path contours as if the tool were moving and the workpiece remaining stationary.

Example:

```
50 L X+100
```

50	Block number
L	Path function "straight line "
X+100	Coordinate of the end point

The tool retains the Y and Z coordinates and moves to the position X=100. See figure.

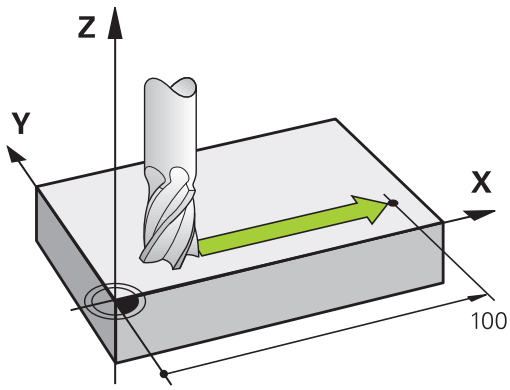

Movement in the main planes

The program block contains two coordinates. The TNC thus moves the tool in the programmed plane.

Example

```
L X+70 Y+50
```

The tool retains the Z coordinate and moves in the XY plane to the position X=70, Y=50 (see figure).

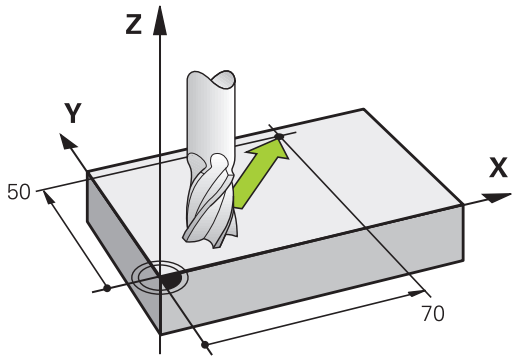

Three-dimensional movement

The program block contains three coordinates. The TNC thus moves the tool in space to the programmed position.

Example

```
L X+80 Y+0 Z-10
```

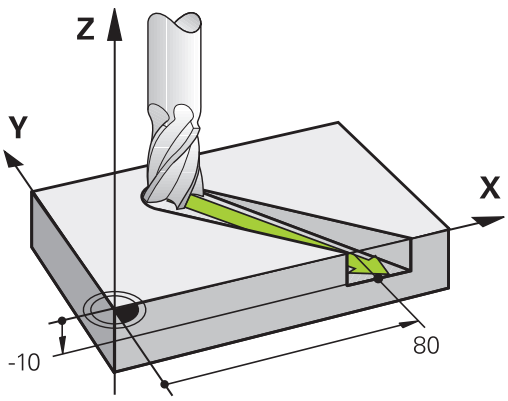

Circles and circular arcs

The TNC moves two axes simultaneously on a circular path relative to the workpiece. You can define a circular movement by entering the circle center CC.

When you program a circle, the control assigns it to one of the main planes. This plane is defined automatically when you set the spindle axis during a TOOL CALL:

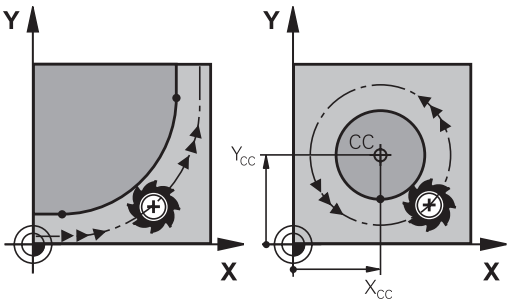

Spindle axis	Main plane
Z	**XY**, also UV, XY, UY
Y	**ZX**, also WU, ZU, WX
X	**YZ**, also VW, YW, VZ

> You can program circles that do not lie parallel to a main plane by using the function for tilting the working plane (see User's Manual for Cycles, Cycle 19, WORKING PLANE) or Q parameters (See "Principle and overview of functions").

Direction of rotation DR for circular movements

When a circular path has no tangential transition to another contour element, enter the direction of rotation as follows:

Clockwise direction of rotation: **DR-**
Counterclockwise direction of rotation: **DR+**

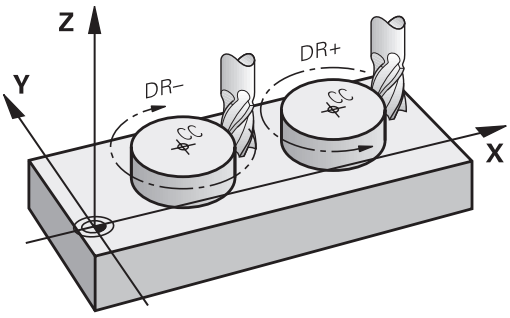

Radius compensation

The radius compensation must be in the block in which you move to the first contour element. You cannot activate radius compensation in a circle block. Activate it beforehand in a straight-line block (See "Path contours - Cartesian coordinates", page 182) or approach block (APPR block, See " Approaching and departing a contour", page 174).

Pre-position

> **!** **Danger of collision!**
> Before running a part program, always pre-position the tool to prevent the possibility of damaging it or the workpiece.

Creating the program blocks with the path function keys

The gray path function keys initiate the plain-language dialog. The TNC asks you successively for all the necessary information and inserts the program block into the part program.

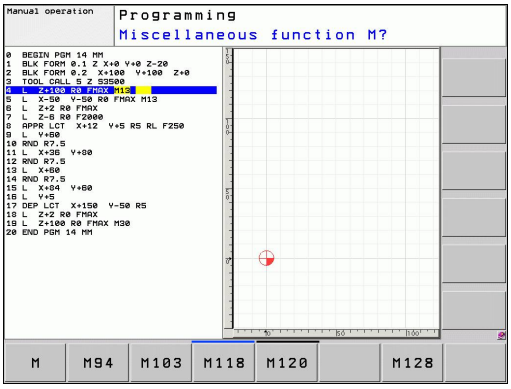

Example – programming a straight line

- Initiate the programming dialog, e.g. for a straight line

COORDINATES ?

- Enter the coordinates of the straight-line end point, e.g. –20 in X

COORDINATES ?

- Enter the coordinates of the straight-line end point, e.g. 30 in Y, and confirm with the ENT key

Radius comp.: RL/RR/no comp.?

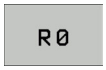

- Select the radius compensation (here, press the R0 soft key—the tool moves without compensation)

Feed rate F=? / F MAX = ENT

- Enter **100** (feed rate e.g. 100 mm/min), and confirm your entry with ENT. For programming in inches, enter 100 for a feed rate of 10 ipm. Or,

- Move at rapid traverse: Press the FMAX soft key, or

- Traverse with the feed rate defined in the **TOOL CALL** block: Press the F AUTO soft key.

MISCELLANEOUS FUNCTION M ?

- Enter **3** (miscellaneous function e.g. M3), and terminate the dialog with ENT.

The part program now contains the following line:

```
L X-20 Y+30 R0 FMAX M3
```

6.3 Approaching and departing a contour

Overview: Types of paths for contour approach and departure

The functions for contour approach APPR and departure DEP are activated with the APPR/DEP key. You can then select the desired path function with the corresponding soft key:

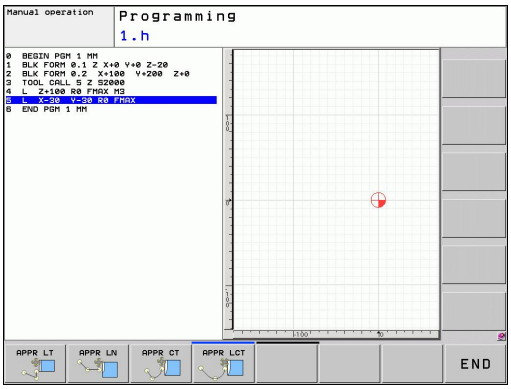

Function	Approach	Departure
Straight line with tangential connection	APPR LT	DEP LT
Straight line perpendicular to a contour point	APPR LN	DEP LN
Circular arc with tangential connection	APPR CT	DEP CT
Circular arc with tangential connection to the contour. Approach and departure to an auxiliary point outside the contour on a tangentially connecting line	APPR LCT	DEP LCT

Approaching and departing a helix

The tool approaches and departs a helix on its extension by moving in a circular arc that connects tangentially to the contour. You program helical approach and departure with the APPR CT and DEP CT functions.

Important positions for approach and departure

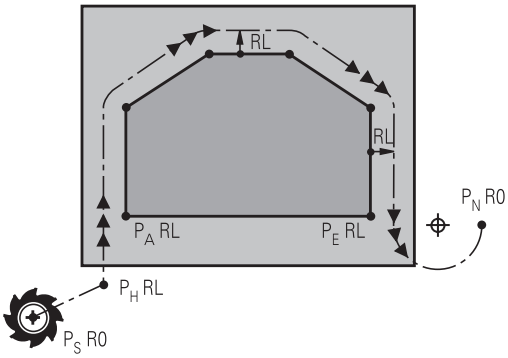

- Starting point P_S
  You program this position directly before the APPR block. P_S lies outside the contour and is approached without radius compensation (R0).
- Auxiliary point P_H
  Some of the paths for approach and departure go through an auxiliary point P_H that the TNC calculates from your input in the APPR or DEP block. The TNC moves from the current position to the auxiliary point P_H at the feed rate last programmed. If you have programmed **FMAX** (positioning at rapid traverse) in the last positioning block before the approach function, the TNC also approaches the auxiliary point P_H at rapid traverse.
- First contour point P_A and last contour point P_E
  You program the first contour point P_A in the APPR block.
  The last contour point P_E can be programmed with any path function. If the APPR block also contains a Z axis coordinate, the TNC will first move the tool to P_H in the working plane, and then move it to the entered depth in the tool axis.
- End point PN
  The position P_N lies outside of the contour and results from your input in the DEP block. If the DEP block also contains a Z axis coordinate, the TNC will first move the tool to P_N in the working plane, and then move it to the entered depth in the tool axis.

Abbreviation	Meaning
APPR	Approach
DEP	Departure
L	Line
C	Circle
T	Tangential (smooth connection)
N	Normal (perpendicular)

The TNC does not check whether the programmed contour will be damaged when moving from the actual position to the auxiliary point P_H. Use the test graphics to check.

With the APPR LT, APPR LN and APPR CT functions, the TNC moves the tool from the actual position to the auxiliary point P_H at the feed rate/rapid traverse that was last programmed. With the APPR LCT function, the TNC moves to the auxiliary point P_H at the feed rate programmed with the APPR block. If no feed rate is programmed before the approach block, the TNC generates an error message.

Polar coordinates

You can also program the contour points for the following approach/departure functions over polar coordinates:

- APPR LT becomes APPR PLT
- APPR LN becomes APPR PLN
- APPR CT becomes APPR PCT
- APPR LCT becomes APPR PLCT
- DEP LCT becomes DEP PLCT

Select by soft key an approach or departure function, then press the orange P key.

Radius compensation

The tool radius compensation is programmed together with the first contour point PA in the APPR block. The DEP blocks automatically discard the tool radius compensation.

Contour approach without radius compensation: If you program the APPR block with R0, the TNC will calculate the tool path for a tool radius of 0 mm and a radius compensation RR! The radius compensation is necessary to set the direction of contour approach and departure in the APPR/DEP LN and APPR/DEP CT functions. In addition, you must program both coordinates in the working plane in the first traverse block after APPR.

Approaching on a straight line with tangential connection: APPR LT

The tool moves on a straight line from the starting point P_S to an auxiliary point P_H. It then moves to the first contour point P_A on a straight line that connects tangentially to the contour. The auxiliary point P_H is separated from the first contour point P_A by the distance LEN.

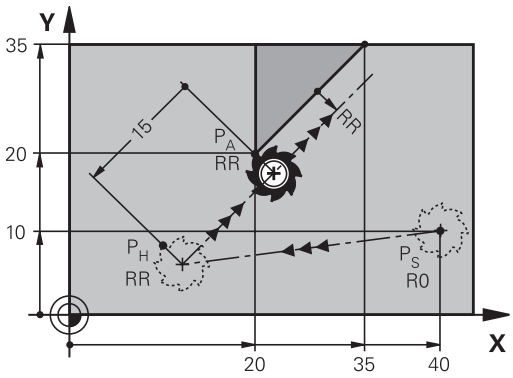

- Use any path function to approach the starting point P_S
- Initiate the dialog with the APPR/DEP key and APPR LT soft key:

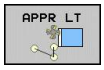

  - Coordinates of the first contour point P_A
  - LEN: Distance from the auxiliary point P_H to the first contour point P_A
  - Radius compensation RR/RL for machining

Example NC blocks

7 L X+40 Y+10 R0 FMAX M3	P_S without radius compensation
8 APPR LT X+20 Y+20 Z-10 LEN15 RR F100	P_A with radius comp. RR, distance P_H zu P_A: LEN=15
9 L X+35 Y+35	End point of the first contour element
10 L ...	Next contour element

Approaching on a straight line perpendicular to the first contour point: APPR LN

The tool moves on a straight line from the starting point P_S to an auxiliary point P_H. It then moves to the first contour point P_A on a straight line perpendicular to the first contour element. The auxiliary point P_H is separated by the distance LEN plus the tool radius from the first contour point P_A.

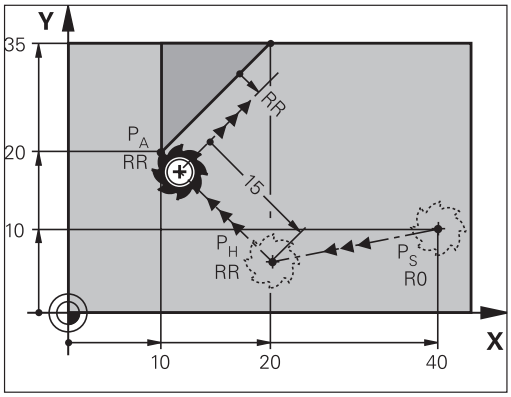

- Use any path function to approach the starting point P_S
- Initiate the dialog with the APPR/DEP key and APPR LN soft key:

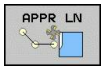

  - Coordinates of the first contour point P_A
  - Length: Distance to the auxiliary point P_H. Always enter LEN as a positive value!
  - Radius compensation RR/RL for machining

Example NC blocks

7 L X+40 Y+10 R0 FMAX M3	Approach PS without radius compensation
8 APPR LN X+10 Y+20 Z-10 LEN15 RR F100	PA with radius comp. RR
9 L X+20 Y+35	End point of the first contour element
10 L ...	Next contour element

Approaching on a circular path with tangential connection: APPR CT

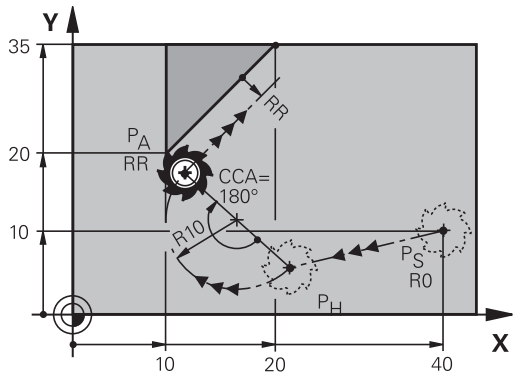

The tool moves on a straight line from the starting point P_S to an auxiliary point P_H. It then moves from PH to the first contour point PA following a circular arc that is tangential to the first contour element.

The arc from P_H to P_A is determined through the radius R and the center angle CCA. The direction of rotation of the circular arc is automatically derived from the tool path for the first contour element.

- Use any path function to approach the starting point P_S
- Initiate the dialog with the APPR/DEP key and APPR CT soft key:

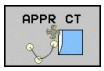

- Coordinates of the first contour point P_A
- Radius R of the circular arc
  - If the tool should approach the workpiece in the direction defined by the radius compensation: Enter R as a positive value.
  - If the tool should approach from the workpiece side: Enter R as a negative value.
- Center angle CCA of the arc
  - CCA can be entered only as a positive value.
  - Maximum input value 360°
- Radius compensation RR/RL for machining

Example NC blocks

7 L X+40 Y+10 R0 FMAX M3	Approach PS without radius compensation
8 APPR CT X+10 Y+20 Z-10 CCA180 R+10 RR F100	PA with radius compensation RR, radius R=10
9 L X+20 Y+35	End point of the first contour element
10 L ...	Next contour element

Approaching on a circular path with tangential connection from a straight line to the contour: APPR LCT

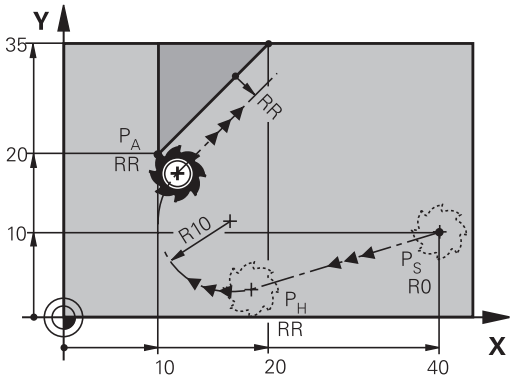

The tool moves on a straight line from the starting point P_S to an auxiliary point P_H. It then moves to the first contour point P_A on a circular arc. The feed rate programmed in the APPR block is effective for the entire path that the TNC traversed in the approach block (path P_S to P_A).

If you have programmed the coordinates of all three principal axes X, Y and Z in the approach block, the TNC moves the tool from the position defined before the APPR block simultaneously in all three axes to the auxiliary point PH and then, only in the working plane, from P_H to P_A.

The arc is connected tangentially both to the line P_S–P_H as well as to the first contour element. Once these lines are known, the radius then suffices to completely define the tool path.

- Use any path function to approach the starting point P_S
- Initiate the dialog with the APPR/DEP key and APPR LCT soft key:

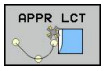

- Coordinates of the first contour point P_A
- Radius R of the circular arc. Enter R as a positive value
- Radius compensation RR/RL for machining

Example NC blocks

7 L X+40 Y+10 R0 FMAX M3	Approach PS without radius compensation
8 APPR LCT X+10 Y+20 Z-10 R10 RR F100	PA with radius compensation RR, radius R=10
9 L X+20 Y+35	End point of the first contour element
10 L ...	Next contour element

Departing in a straight line with tangential connection: DEP LT

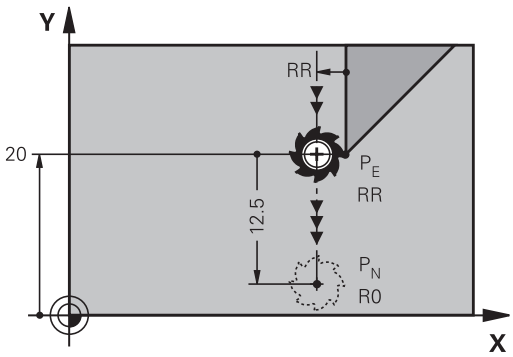

The tool moves on a straight line from the last contour point P_E to the end point P_N. The line lies on the extension of the last contour element. P_N is separated from P_E by the distance LEN.

- Program the last contour element with the end point P_E and radius compensation
- Initiate the dialog with the APPR/DEP key and DEP LT soft key:

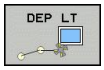

- LEN: Enter the distance from the last contour element P_E to the end point P_N

Example NC blocks

23 L Y+20 RR F100	Last contour element: PE with radius compensation
24 DEP LT LEN12.5 F100	Depart contour by LEN=12.5 mm
25 L Z+100 FMAX M2	Retract in Z, return to block 1, end program

Departing in a straight line perpendicular to the last contour point: DEP LN

The tool moves on a straight line from the last contour point P_E to the end point P_N. The line departs on a perpendicular path from the last contour point P_E. P_N is separated from P_E by the distance LEN plus the tool radius.

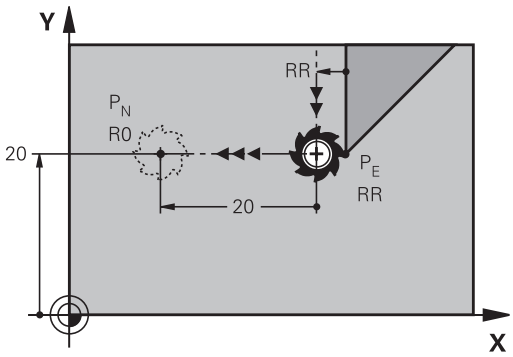

- Program the last contour element with the end point P_E and radius compensation
- Initiate the dialog with the APPR/DEP key and DEP LN soft key:

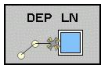

- LEN: Enter the distance from the last contour element to P_N. Important: Enter LEN with a positive value.

Example NC blocks

23 L Y+20 RR F100	Last contour element: PE with radius compensation
24 DEP LN LEN+20 F100	Depart perpendicular to contour by LEN=20 mm
25 L Z+100 FMAX M2	Retract in Z, return to block 1, end program

Departing on a circular path with tangential connection: DEP CT

The tool moves on a circular arc from the last contour point P_E to the end point P_N. The circular arc connects tangentially to the last contour element.

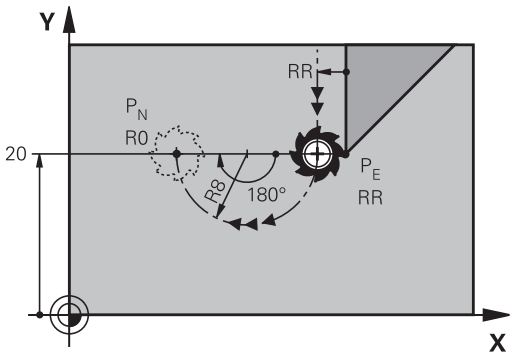

- Program the last contour element with the end point P_E and radius compensation
- Initiate the dialog with the APPR/DEP key and DEP CT soft key:

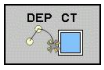

- Center angle CCA of the arc
- Radius R of the circular arc
  - If the tool should depart the workpiece in the direction of the radius compensation (i.e. to the right with RR or to the left with RL): Enter R as a positive value.
  - If the tool should depart the workpiece in the direction **opposite** to the radius compensation: Enter R as a negative value.

Example NC blocks

23 L Y+20 RR F100	Last contour element: PE with radius compensation
24 DEP CT CCA 180 R+8 F100	Center angle=180°,
	arc radius=8 mm
25 L Z+100 FMAX M2	Retract in Z, return to block 1, end program

Departing on a circular arc tangentially connecting the contour and a straight line: DEP LCT

The tool moves on a circular arc from the last contour point P_E to an auxiliary point P_H. It then moves on a straight line to the end point P_N. The arc is tangentially connected both to the last contour element and to the line from P_H to P_N. Once these lines are known, the radius R suffices to unambiguously define the tool path.

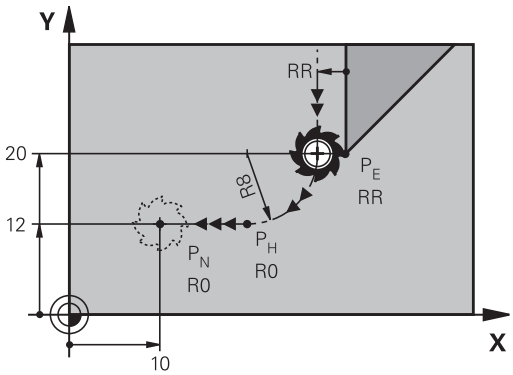

- Program the last contour element with the end point P_E and radius compensation
- Initiate the dialog with the APPR/DEP key and DEP LCT soft key:

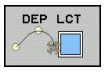

- Enter the coordinates of the end point P_N
- Radius R of the circular arc. Enter R as a positive value

Example NC blocks

23 L Y+20 RR F100	Last contour element: PE with radius compensation
24 DEP LCT X+10 Y+12 R+8 F100	Coordinates PN, arc radius=8 mm
25 L Z+100 FMAX M2	Retract in Z, return to block 1, end program

6.4 Path contours - Cartesian coordinates

Overview of path functions

Function	Path function key	Tool movement	Required input	Page
Straight line **L**	L	Straight line	Coordinates of the end point of the straight line	183
Chamfer: **CHF**	CHF	Chamfer between two straight lines	Chamfer side length	184
Circle center **CC**	CC	None	Coordinates of the circle center or pole	186
Circular arc **C**	C	Circular arc around a circle center CC to an arc end point	Coordinates of the arc end point, direction of rotation	187
Circular arc **CR**	CR	Circular arc with a certain radius	Coordinates of the arc end point, arc radius, direction of rotation	188
Kreisbogen **CT**	CT	Circular arc with tangential connection to the preceding and subsequent contour elements	Coordinates of the arc end point	190
Corner rounding **RND**	RND	Circular arc with tangential connection to the preceding and subsequent contour elements	Rounding radius R	185
FK free contour programming	FK	Straight line or circular path with any connection to the preceding contour element	See "Path contours – FK free contour programming ", page 201	205

Straight line L

The TNC moves the tool in a straight line from its current position to the straight-line end point. The starting point is the end point of the preceding block.

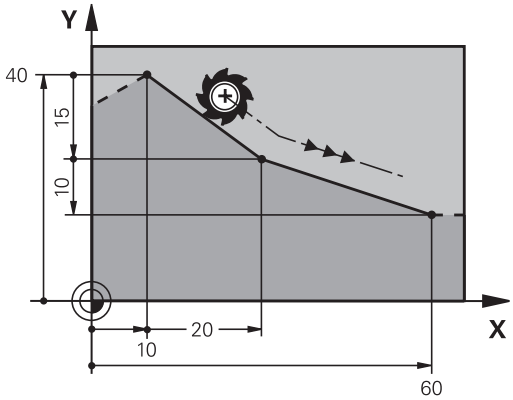

- **Coordinates** of the end point of the straight line, if necessary
- **Radius compensation RL/RR/R0**
- **Feed rate F**
- **Miscellaneous function M**

Example NC blocks

7 L X+10 Y+40 RL F200 M3
8 L IX+20 IY-15
9 L X+60 IY-10

Capture actual position

You can also generate a straight-line block (**L** block) by using the ACTUAL-POSITION-CAPTURE key:

- In the Manual Operation mode, move the tool to the position you want to capture
- Switch the screen display to Programming and Editing
- Select the program block after which you want to insert the L block

- Press the ACTUAL-POSITION-CAPTURE key: The TNC generates an L block with the actual position coordinates.

Inserting a chamfer between two straight lines

The chamfer enables you to cut off corners at the intersection of two straight lines.

- The line blocks before and after the **CHF** block must be in the same working plane as the chamfer.
- The radius compensation before and after the **CHF** block must be the same
- The chamfer must be machinable with the current tool

- **Chamfer side length**: Length of the chamfer, and if necessary:
- **Feed rate F** (effective only in **CHF** block)

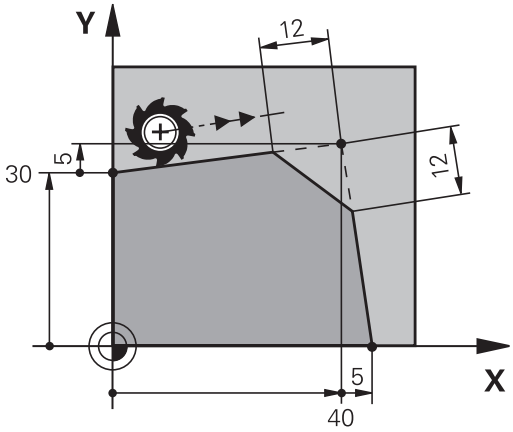

Example NC blocks

```
7 L X+0 Y+30 RL F300 M3
8 L X+40 IY+5
9 CHF 12 F250
10 L IX+5 Y+0
```

You cannot start a contour with a **CHF** block.

A chamfer is possible only in the working plane.

The corner point is cut off by the chamfer and is not part of the contour.

A feed rate programmed in the CHF block is effective only in that block. After the **CHF** block, the previous feed rate becomes effective again.

Corner rounding RND

The **RND** function is used for rounding off corners.

The tool moves on an arc that is tangentially connected to both the preceding and subsequent contour elements.

The rounding arc must be machinable with the called tool.

- **Rounding radius**: Enter the radius, and if necessary:
- **Feed rate F** (effective only in **RND** block)

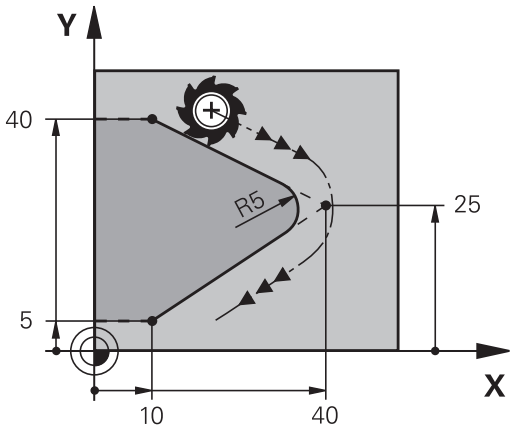

Example NC blocks

```
5 L X+10 Y+40 RL F300 M3
6 L X+40 Y+25
7 RND R5 F100
8 L X+10 Y+5
```

In the preceding and subsequent contour elements, both coordinates must lie in the plane of the rounding arc. If you machine the contour without tool-radius compensation, you must program both coordinates in the working plane.

The corner point is cut off by the rounding arc and is not part of the contour.

A feed rate programmed in the **RND** block is effective only in that **RND** block. After the **RND** block, the previous feed rate becomes effective again.

You can also use an **RND** block for a tangential contour approach.

Circle center CC

You can define a circle center for circles that you have programmed with the C key (circular path C) , or function. This is done in the following ways:

- Entering the Cartesian coordinates of the circle center in the working plane, or
- Using the circle center defined in an earlier block, or
- Capturing the coordinates with the ACTUAL-POSITION-CAPTURE key

▶ Enter coordinates for the circle center or, if you want to use the last programmed position, enter no coordinates

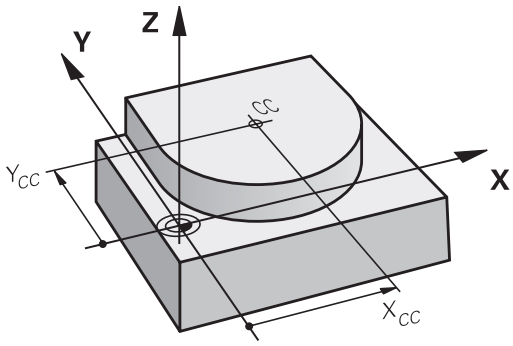

Example NC blocks

```
5 CC X+25 Y+25
```

or

```
10 L X+25 Y+25
11 CC
```

The program blocks 10 and 11 do not refer to the illustration.

Validity

The circle center definition remains in effect until a new circle center is programmed.

Entering the circle center incrementally

If you enter the circle center with incremental coordinates, you have programmed it relative to the last programmed position of the tool.

The only effect of CC is to define a position as circle center: The tool does not move to this position.

The circle center is also the pole for polar coordinates.

Circular path C around circle center CC

Before programming a circular arc, you must first enter the circle center **CC**. The last programmed tool position will be the starting point of the arc.

- Move the tool to the circle starting point

- **Enter the coordinates** of the circle center

- Enter the **coordinates** of the arc end point, and if necessary:
- **Direction of rotation DR**
- **Feed rate F**
- **Miscellaneous function M**

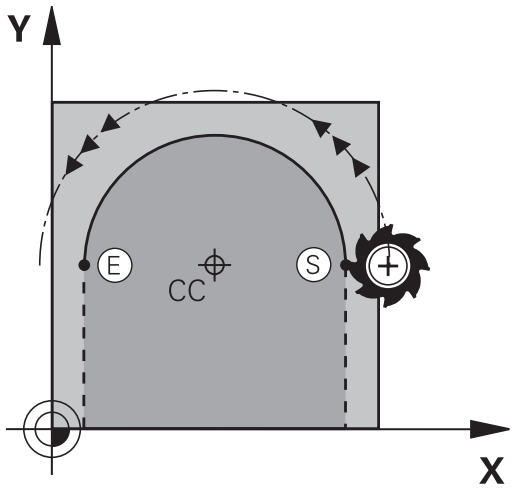

> The TNC normally makes circular movements in the active working plane. If you program circular arcs that do not lie in the active working plane, for example **C Z... X... DR+** with a tool axis Z, and at the same time rotate this movement, then the TNC moves the tool in a spatial arc, which means a circular arc in 3 axes (software option 1).

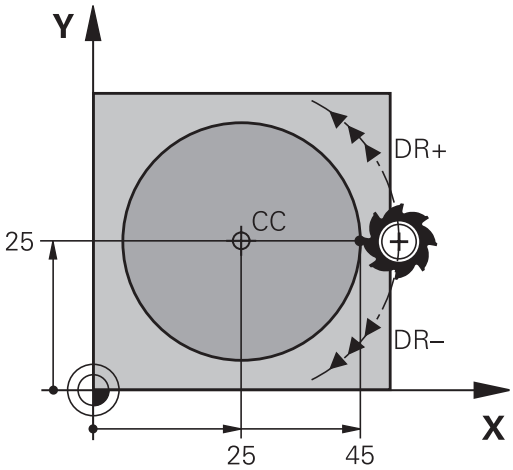

Example NC blocks

```
5 CC X+25 Y+25
6 L X+45 Y+25 RR F200 M3
7 C X+45 Y+25 DR+
```

Full circle

For the end point, enter the same point that you used for the starting point.

> The starting and end points of the arc must lie on the circle.
>
> Input tolerance: up to 0.016 mm (selected through the **circleDeviation** machine parameter).
>
> Smallest possible circle that the TNC can traverse: 0.0016 µm.

Circle CR with defined radius

The tool moves on a circular path with the radius R.

- **Coordinates** of the arc end point
- **Radius R** (the algebraic sign determines the size of the arc)
- **Direction of rotation DR** Note: The algebraic sign determines whether the arc is concave or convex.
- **Miscellaneous function M**
- **Feed rate F**

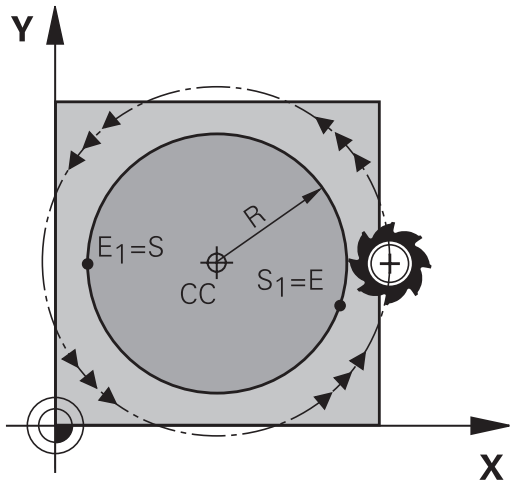

Full circle

For a full circle, program two blocks in succession:

The end point of the first semicircle is the starting point of the second. The end point of the second semicircle is the starting point of the first.

Central angle CCA and arc radius R

The starting and end points on the contour can be connected with four arcs of the same radius:

Smaller arc: CCA<180°

Enter the radius with a positive sign R>0

Larger arc: CCA>180°
Enter the radius with a negative sign R<0

The direction of rotation determines whether the arc is curving outward (convex) or curving inward (concave):

Convex: Direction of rotation **DR-** (with radius compensation **RL**)

Concave: Direction of rotation **DR+** (with radius compensation **RL**)

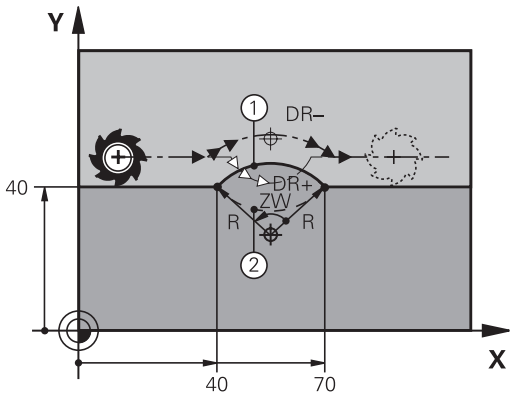

> The distance from the starting and end points of the arc diameter cannot be greater than the diameter of the arc.
>
> The maximum radius is 99.9999 m.
>
> You can also enter rotary axes A, B and C.

Example NC blocks

```
10 L X+40 Y+40 RL F200 M3
11 CR X+70 Y+40 R+20 DR- (ARC 1)
```

or

```
11 CR X+70 Y+40 R+20 DR+ (ARC 2)
```

or

```
11 CR X+70 Y+40 R-20 DR- (ARC 3)
```

or

```
11 CR X+70 Y+40 R-20 DR+ (ARC 4)
```

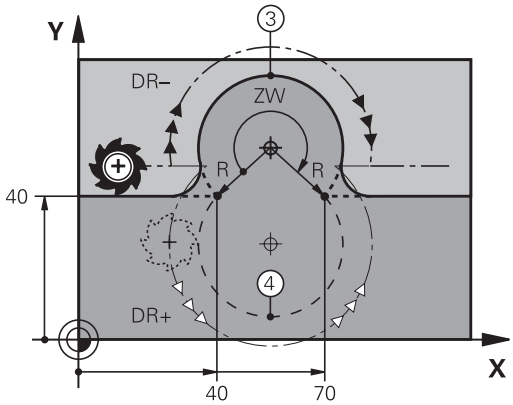

Circle CT with tangential connection

The tool moves on an arc that starts tangentially to the previously programmed contour element.

A transition between two contour elements is called tangential when there is no kink or corner at the intersection between the two contours—the transition is smooth.

The contour element to which the tangential arc connects must be programmed immediately before the **CT** block. This requires at least two positioning blocks.

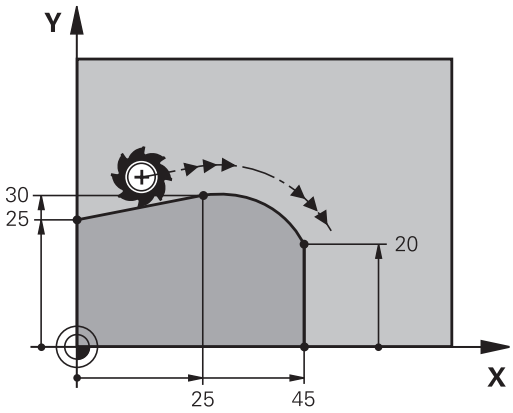

- **Coordinates** of the arc end point, and if necessary:
- **Feed rate F**
- **Miscellaneous function M**

Example NC blocks

```
7 L X+0 Y+25 RL F300 M3
8 L X+25 Y+30
9 CT X+45 Y+20
10 L Y+0
```

A tangential arc is a two-dimensional operation: the coordinates in the **CT** block and in the contour element preceding it must be in the same plane of the arc!

Example: Linear movements and chamfers with Cartesian coordinates

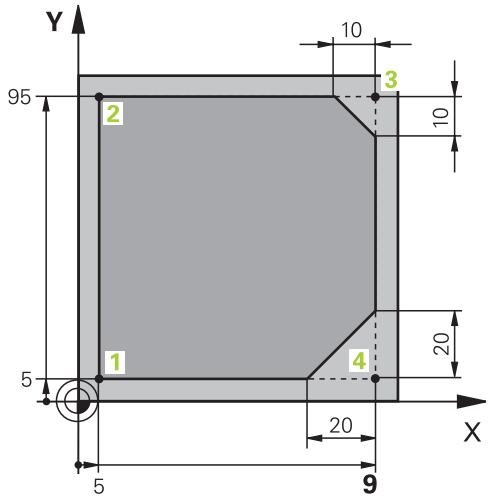

0 BEGIN PGM LINEAR MM	
1 BLK FORM 0.1 Z X+0 Y+0 Z-20	Define the workpiece blank for graphic workpiece simulation
2 BLK FORM 0.2 X+100 Y+100 Z+0	
3 TOOL CALL 1 Z S4000	Call the tool in the spindle axis and with the spindle speed S
4 L Z+250 R0 FMAX	Retract the tool in the spindle axis at rapid traverse FMAX
5 L X-10 Y-10 R0 FMAX	Pre-position the tool
6 L Z-5 R0 F1000 M3	Move to working depth at feed rate F = 1000 mm/min
7 APPR LT X+5 Y+5 LEN10 RL F300	Approach the contour at point 1 on a straight line with tangential connection
8 L Y+95	Move to point 2
9 L X+95	Point 3: first straight line for corner 3
10 CHF 10	Program a chamfer with length 10 mm
11 L Y+5	Point 4: 2nd straight line for corner 3, 1st straight line for corner 4
12 CHF 20	Program a chamfer with length 20 mm
13 L X+5	Move to last contour point 1, second straight line for corner 4
14 DEP LT LEN10 F1000	Depart the contour on a straight line with tangential connection
15 L Z+250 R0 FMAX M2	Retract the tool, end program
16 END PGM LINEAR MM	

Example: Circular movements with Cartesian coordinates

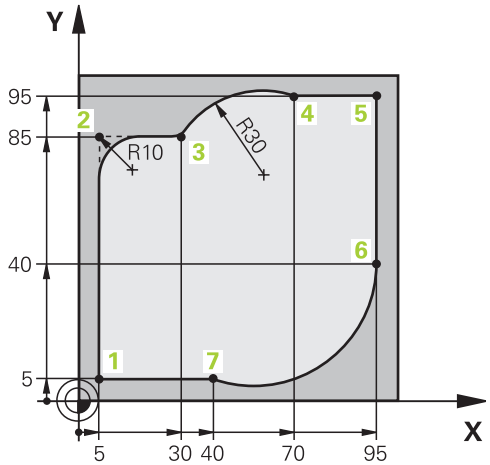

0 BEGIN PGM CIRCULAR MM	
1 BLK FORM 0.1 Z X+0 Y+0 Z-20	Define the workpiece blank for graphic workpiece simulation
2 BLK FORM 0.2 X+100 Y+100 Z+0	
3 TOOL CALL 1 Z S4000	Call the tool in the spindle axis and with the spindle speed S
4 L Z+250 R0 FMAX	Retract the tool in the spindle axis at rapid traverse FMAX
5 L X-10 Y-10 R0 FMAX	Pre-position the tool
6 L Z-5 R0 F1000 M3	Move to working depth at feed rate F = 1000 mm/min
7 APPR LCT X+5 Y+5 R5 RL F300	Approach the contour at point 1 on a circular arc with tangential connection
8 L X+5 Y+85	Point 2: First straight line for corner 2
9 RND R10 F150	Insert radius with R = 10 mm, feed rate: 150 mm/min
10 L X+30 Y+85	Move to point 3: Starting point of the arc with CR
11 CR X+70 Y+95 R+30 DR-	Move to point 4: End point of the arc with CR, radius 30 mm
12 L X+95	Move to point 5
13 L X+95 Y+40	Move to point 6
14 CT X+40 Y+5	Move to point 7: End point of the arc, circular arc with tangential connection to point 6, TNC automatically calculates the radius
15 L X+5	Move to last contour point 1
16 DEP LCT X-20 Y-20 R5 F1000	Depart the contour on a circular arc with tangential connection
17 L Z+250 R0 FMAX M2	Retract the tool, end program
18 END PGM CIRCULAR MM	

Example: Full circle with Cartesian coordinates

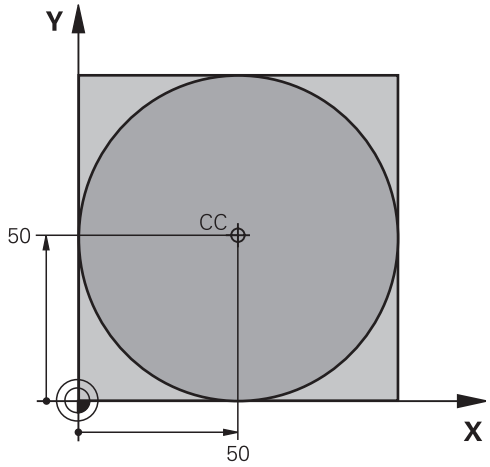

0 BEGIN PGM C-CC MM	
1 BLK FORM 0.1 Z X+0 Y+0 Z-20	Definition of workpiece blank
2 BLK FORM 0.2 X+100 Y+100 Z+0	
3 TOOL CALL 1 Z S3150	Tool call
4 CC X+50 Y+50	Define the circle center
5 L Z+250 R0 FMAX	Retract the tool
6 L X-40 Y+50 R0 FMAX	Pre-position the tool
7 L Z-5 R0 F1000 M3	Move to working depth
8 APPR LCT X+0 Y+50 R5 RL F300	Approach the starting point of the circle on a circular arc with tangential connection
9 C X+0 DR-	Move to the circle end point (= circle starting point)
10 DEP LCT X-40 Y+50 R5 F1000	Depart the contour on a circular arc with tangential connection
11 L Z+250 R0 FMAX M2	Retract the tool, end program
12 END PGM C-CC MM	

6.5 Path contours – Polar coordinates

Overview

With polar coordinates you can define a position in terms of its angle **PA** and its distance **PR** relative to a previously defined pole **CC**.

Polar coordinates are useful with:

- Positions on circular arcs
- Workpiece drawing dimensions in degrees, e.g. bolt hole circles

Overview of path functions with polar coordinates

Function	Path function key	Tool movement	Required input	Page
Straight line **LP**	L + P	Straight line	Polar radius, polar angle of the straight-line end point	195
Circular arc **CP**	C + P	Circular path around circle center/pole to arc end point	Polar angle of the arc end point, direction of rotation	196
Circular arc **CTP**	CT + P	Circular arc with tangential connection to the preceding contour element	Polar radius, polar angle of the arc end point	196
Helical interpolation	C + P	Combination of a circular and a linear movement	Polar radius, polar angle of the arc end point, coordinate of the end point in the tool axis	197

Zero point for polar coordinates: pole CC

You can define the pole CC anywhere in the part program before blocks containing polar coordinates. Set the pole in the same way as you would program the circle center.

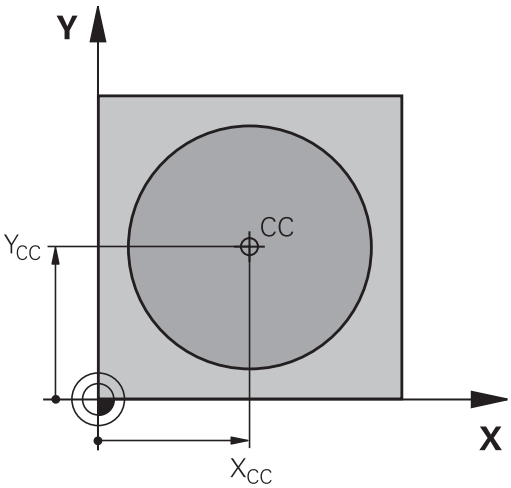

- **Coordinates**: Enter Cartesian coordinates for the pole or, if you want to use the last programmed position, enter No coordinates. Before programming polar coordinates, define the pole. You can only define the pole in Cartesian coordinates. The pole remains in effect until you define a new pole.

Example NC blocks

```
12 CC X+45 Y+25
```

Straight line LP

The tool moves in a straight line from its current position to the straight-line end point. The starting point is the end point of the preceding block.

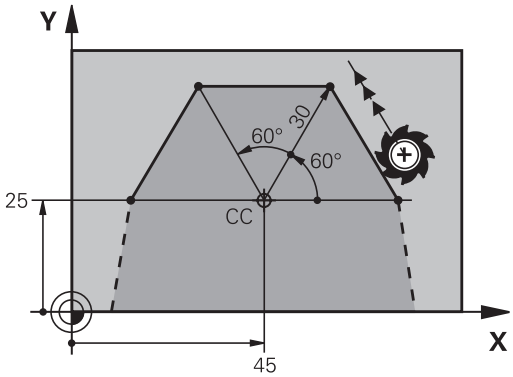

- **Polar coordinate radius PR**: Enter the distance from the pole CC to the straight-line end point

- **Polar coordinate angle PA**: Angular position of the straight-line end point between –360° and +360°

The sign of **PA** depends on the angle reference axis:

- If the angle from the angle reference axis to **PR** is counterclockwise: **PA**>0
- If the angle from the angle reference axis to **PR** is clockwise: **PA**<0

Example NC blocks

```
12 CC X+45 Y+25
13 LP PR+30 PA+0 RR F300 M3
14 LP PA+60
15 LP IPA+60
16 LP PA+180
```

Circular path CP around pole CC

The polar coordinate radius **PR** is also the radius of the arc. **PR** is defined by the distance from the starting point to the pole **CC**. The last programmed tool position will be the starting point of the arc.

- **Polar-coordinates angle PA**: Angular position of the arc end point between –99 999.9999° and +99 999.9999°
- **Direction of rotation DR**

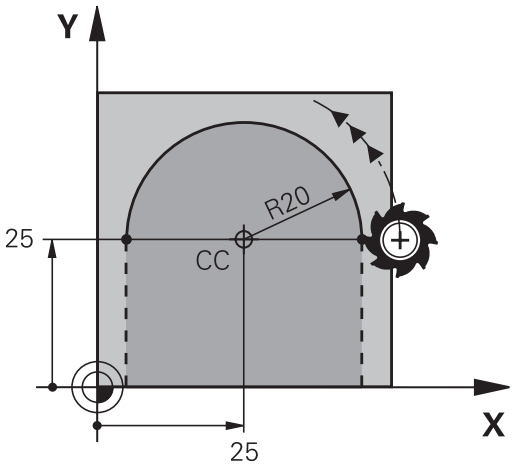

Example NC blocks

```
18 CC X+25 Y+25
19 LP PR+20 PA+0 RR F250 M3
20 CP PA+180 DR+
```

For incremental coordinates, enter the same sign for DR and PA.

Circle CTP with tangential connection

The tool moves on a circular path, starting tangentially from a preceding contour element.

- **Polar coordinate radius PR**: Enter the distance from are end point to the pole **CC**
- **Polar coordinates angle PA**: Angular position of the arc end point

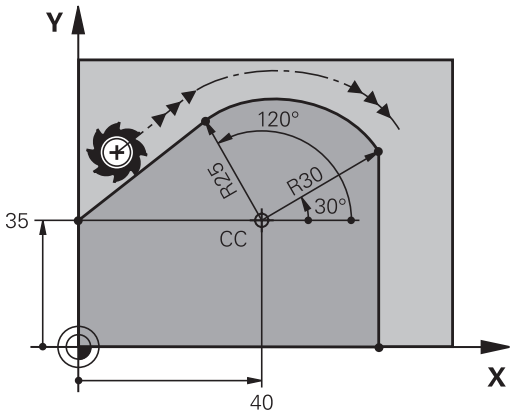

The pole is **not** the center of the contour arc!

Example NC blocks

```
12 CC X+40 Y+35
13 L X+0 Y+35 RL F250 M3
14 LP PR+25 PA+120
15 CTP PR+30 PA+30
16 L Y+0
```

Helix

A helix is a combination of a circular movement in a main plane and a linear movement perpendicular to this plane. You program the circular path in a main plane.

A helix is programmed only in polar coordinates.

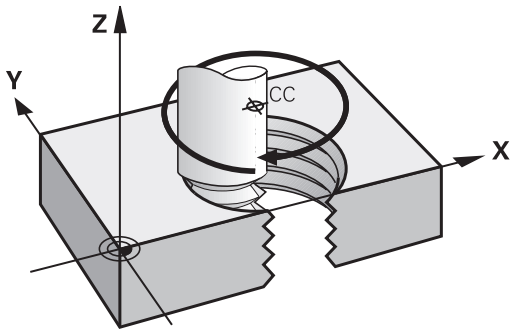

Application

- Large-diameter internal and external threads
- Lubrication grooves

Calculating the helix

To program a helix, you must enter the total angle through which the tool is to move on the helix in incremental dimensions, and the total height of the helix.

Thread revolutions n:	Thread revolutions + overrun at start and end of thread
Total height h:	Thread pitch P times thread revolutions n
Incremental total angle **IPA**:	Thread revolutions x 360° + angle for beginning of thread + angle for thread overrun
Starting coordinate Z:	Pitch P times (thread revolutions + thread overrun at start of thread)

Shape of the helix

The table below illustrates in which way the shape of the helix is determined by the work direction, direction of rotation and radius compensation.

Internal thread	**Work direction**	**Direction of rotation**	**Radius compensation**
Right-hand	Z+	**DR+**	**RL**
Left-hand	Z+	**DR-**	**RR**
Right-hand	Z–	**DR-**	**RR**
Left-hand	Z–	**DR+**	**RL**
External thread			
Right-hand	Z+	**DR+**	**RR**
Left-hand	Z+	**DR-**	**RL**
Right-hand	Z–	**DR-**	**RL**
Left-hand	Z–	**DR+**	**RR**

Programming a helix

Always enter the same algebraic sign for the direction of rotation and the incremental total angle **IPA**. The tool may otherwise move in a wrong path and damage the contour.

For the total angle **IPA** you can enter a value of -99 999.9999° to +99 999.9999°.

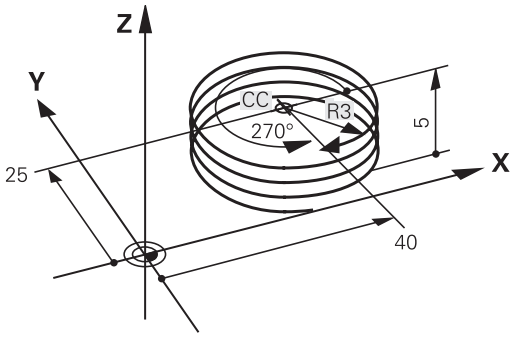

- **Polar coordinates angle:** Enter the total angle of tool traverse along the helix in incremental dimensions. **After entering the angle, specify the tool axis with an axis selection key.**
- **Coordinate**: Enter the coordinate for the height of the helix in incremental dimensions
- **Direction of rotation DR**

  Clockwise helix: DR–
  Counterclockwise helix: DR+
- **Enter the radius compensation** according to the table

Example NC blocks: Thread M6 x 1 mm with 5 revolutions

```
12 CC X+40 Y+25
13 L Z+0 F100 M3
14 LP PR+3 PA+270 RL F50
15 CP IPA-1800 IZ+5 DR-
```

Example: Linear movement with polar coordinates

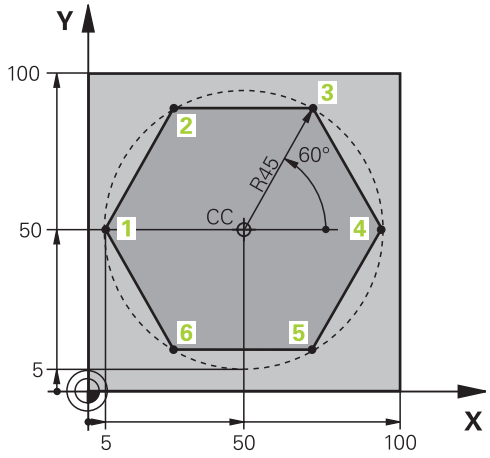

0 BEGIN PGM LINEARPO MM	
1 BLK FORM 0.1 Z X+0 Y+0 Z-20	Definition of workpiece blank
2 BLK FORM 0.2 X+100 Y+100 Z+0	
3 TOOL CALL 1 Z S4000	Tool call
4 CC X+50 Y+50	Define the datum for polar coordinates
5 L Z+250 R0 FMAX	Retract the tool
6 LP PR+60 PA+180 R0 FMAX	Pre-position the tool
7 L Z-5 R0 F1000 M3	Move to working depth
8 APPR PLCT PR+45 PA+180 R5 RL F250	Approach the contour at point 1 on a circular arc with tangential connection
9 LP PA+120	Move to point 2
10 LP PA+60	Move to point 3
11 LP PA+0	Move to point 4
12 LP PA-60	Move to point 5
13 LP PA-120	Move to point 6
14 LP PA+180	Move to point 1
15 DEP PLCT PR+60 PA+180 R5 F1000	Depart the contour on a circular arc with tangential connection
16 L Z+250 R0 FMAX M2	Retract the tool, end program
17 END PGM LINEARPO MM	

Example: Helix

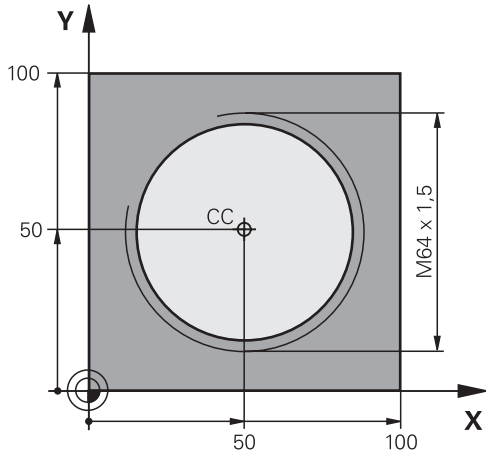

0 BEGIN PGM HELIX MM	
1 BLK FORM 0.1 Z X+0 Y+0 Z-20	Definition of workpiece blank
2 BLK FORM 0.2 X+100 Y+100 Z+0	
3 TOOL CALL 1 Z S1400	Tool call
4 L Z+250 R0 FMAX	Retract the tool
5 L X+50 Y+50 R0 FMAX	Pre-position the tool
6 CC	Transfer the last programmed position as the pole
7 L Z-12,75 R0 F1000 M3	Move to working depth
8 APPR PCT PR+32 PA-182 CCA180 R+2 RL F100	Approach the contour on a circular arc with tangential connection
9 CP IPA+3240 IZ+13.5 DR+ F200	Helical interpolation
10 DEP CT CCA180 R+2	Depart the contour on a circular arc with tangential connection
11 L Z+250 R0 FMAX M2	Retract the tool, end program
12 END PGM HELIX MM	

6.6 Path contours – FK free contour programming

Fundamentals

Workpiece drawings that are not dimensioned for NC often contain unconventional coordinate data that cannot be entered with the gray path function keys. For example:

- Known coordinates on the contour element or in its proximity
- Coordinate data can be referenced to another contour element
- Directional data and data regarding the course of the contour

You can enter such dimensional data directly by using the FK free contour programming function. The TNC derives the contour from the known coordinate data and supports the programming dialog with the interactive programming graphics. The figure at upper right shows a workpiece drawing for which FK programming is the most convenient programming method.

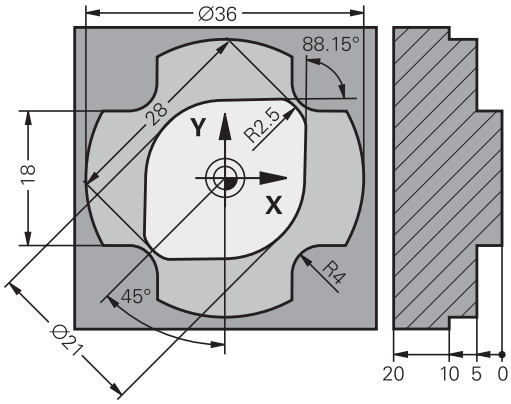

The following prerequisites for FK programming must be observed:

The FK free contour programming feature can only be used for programming contour elements that lie in the working plane.

The working plane for FK programming is defined according to the following hierarchy:

- 1. By the plane defined in a **FPOL** block
- 2. In the Z/X plane if the FK sequence is run in turning mode
- 3. By the working plane pre-defined in **TOOL CALL** (e.g. **TOOL CALL 1 Z** = X/Y plane)
- 4. The standard X/Y plane is active if none of these applies

The display of the FK soft keys depends on the spindle axis in **BLK FORM** If for example you enter spindle axis **Z** in the **BLK FORM**, the TNC only shows FK soft keys for the X/Y plane.

You must enter all available data for every contour element. Even the data that does not change must be entered in every block—otherwise it will not be recognized.

Q parameters are permissible in all FK elements, except in elements with relative references (e.g. **RX** or **RAN**), or in elements that are referenced to other NC blocks.

If both FK blocks and conventional blocks are entered in a program, the FK contour must be fully defined before you can return to conventional programming.

The TNC needs a fixed point from which it can calculate the contour elements. Use the gray path function keys to program a position that contains both coordinates of the working plane immediately before programming the FK contour. Do not enter any Q parameters in this block.

If the first block of an FK contour is an **FCT** or **FLT** block, you must program at least two NC blocks with the gray path function keys to fully define the direction of contour approach.

Do not program an FK contour immediately after an **LBL** command.

FK programming graphics

If you wish to use graphic support during FK programming, select the PROGRAM + GRAPHICS screen layout, See "Programming"

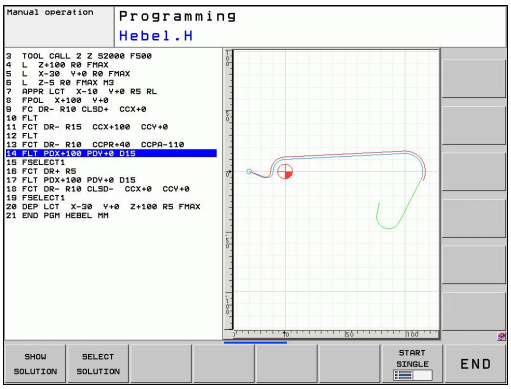

Incomplete coordinate data often is not sufficient to fully define a workpiece contour. In this case, the TNC indicates the possible solutions in the FK graphic. You can then select the contour that matches the drawing. The FK graphic displays the elements of the workpiece contour in different colors:

Blue: The contour element is fully defined

Green: The entered data describe a limited number of possible solutions: select the correct one

Red: The entered data are not sufficient to determine the contour element: enter further data

If the entered data permit a limited number of possible solutions and the contour element is displayed in green, select the correct contour element as follows:

SHOW SOLUTION

- Press the SHOW SOLUTION soft key repeatedly until the correct contour element is displayed. Use the zoom function (2nd soft-key row) if you cannot distinguish possible solutions in the standard setting

SELECT SOLUTION

- If the displayed contour element matches the drawing, select the contour element with SELECT SOLUTION

If you do not yet wish to select a green contour element, press the END SELECT soft key to continue the FK dialog.

Select the green contour elements as soon as possible with the SELECT SOLUTION soft key. This way you can reduce the ambiguity of subsequent elements.

The machine tool builder may use other colors for the FK graphics.

NC blocks from a program that you called with PGM CALL are displayed in another color.

Showing block numbers in the graphic window

To show a block number in the graphic window:

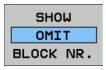

- Set the SHOW OMIT BLOCK NR. soft key to SHOW (soft-key row 3)

Initiating the FK dialog

If you press the gray FK button, the TNC displays the soft keys you can use to initiate an FK dialog—see the following table. Press the FK button a second time to deselect the soft keys.

If you initiate the FK dialog with one of these soft keys, the TNC shows additional soft-key rows that you can use for entering known coordinates, directional data and data regarding the course of the contour.

FK element	Soft key
Straight line with tangential connection	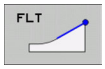
Straight line without tangential connection	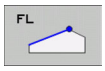
Circular arc with tangential connection	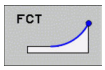
Circular arc without tangential connection	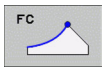
Pole for FK programming	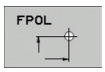

Pole for FK programming

- To display the soft keys for free contour programming, press the FK key

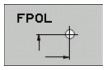

- To initiate the dialog for defining the pole, press the FPOL soft key. The TNC then displays the axis soft keys of the active working plane
- Enter the pole coordinates using these soft keys

The pole for FK programming remains active until you define a new one using FPOL.

Free straight line programming

Straight line without tangential connection

- To display the soft keys for free contour programming, press the FK key

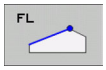

- To initiate the dialog for free programming of straight lines, press the FL soft key. The TNC displays additional soft keys
- Enter all known data in the block by using these soft keys. The FK graphic displays the programmed contour element in red until sufficient data is entered. If the entered data describes several solutions, the graphic will display the contour element in green (See "FK programming graphics", page 203)

Straight line with tangential connection

If the straight line connects tangentially to another contour element, initiate the dialog with the FLT soft key:

- To display the soft keys for free contour programming, press the FK key

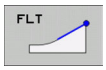

- To initiate the dialog, press the FLT soft key
- Enter all known data in the block by using the soft keys

Free circular path programming

Circular arc without tangential connection

- To display the soft keys for free contour programming, press the FK key

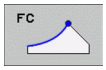

- To initiate the dialog for free programming of circular arcs, press the FC soft key. The TNC displays soft keys with which you can directly enter data on the circular arc or the circle center
- Enter all known data in the block by using these soft keys. The FK graphic displays the programmed contour element in red until sufficient data is entered. If the entered data describes several solutions, the graphic will display the contour element in green (See "FK programming graphics", page 203)

Circular arc with tangential connection

If the circular arc connects tangentially to another contour element, initiate the dialog with the FCT soft key:

- To display the soft keys for free contour programming, press the FK key

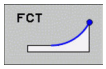

- To initiate the dialog, press the FCT soft key
- Enter all known data in the block by using the soft keys

Input options

End point coordinates

Known data	Soft keys	
Cartesian coordinates X and Y	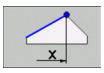	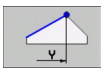
Polar coordinates referenced to FPOL	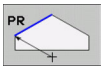	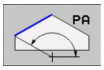

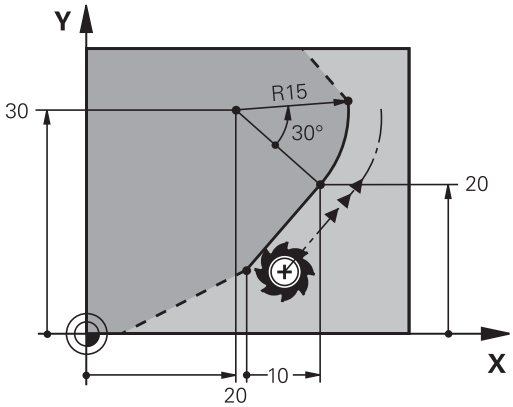

Example NC blocks

```
7 FPOL X+20 Y+30
8 FL IX+10 Y+20 RR F100
9 FCT PR+15 IPA+30 DR+ R15
```

Direction and length of contour elements

Known data	Soft keys
Length of a straight line	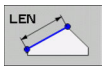
Gradient angle of a straight line	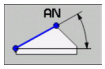
Chord length LEN of an arc	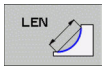
Gradient angle AN of an entry tangent	
Center angle of an arc	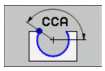

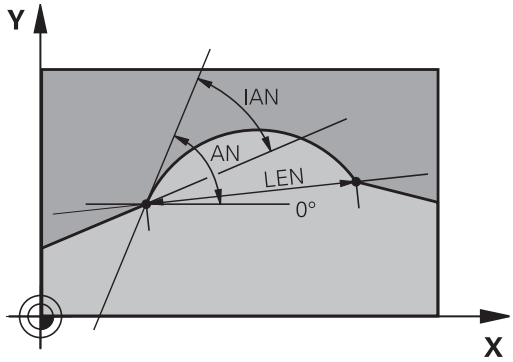

> **!** **Caution: Danger to the workpiece and tool!**
> Gradient angles that you defined incrementally (**IAN**) are referenced to the direction of the last positioning block by the TNC. Programs that contain incremental gradient angles and were created on an iTNC 530 or on earlier TNCs are not compatible.

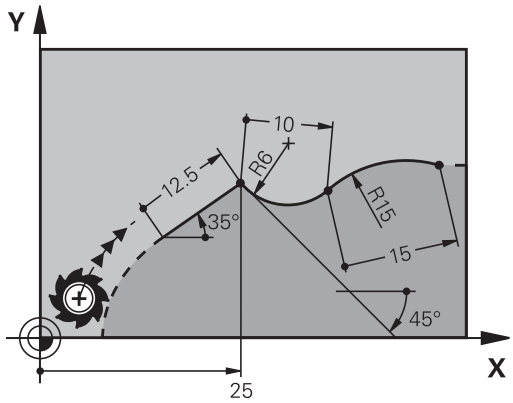

Example NC blocks

```
27 FLT X+25 LEN 12.5 AN+35 RL F200
28 FC DR+ R6 LEN 10 AN-45
29 FCT DR- R15 LEN 15
```

Circle center CC, radius and direction of rotation in the FC/FCT block

The TNC calculates a circle center for free-programmed arcs from the data you enter. This makes it possible to program full circles in an FK program block.

If you wish to define the circle center in polar coordinates you must use FPOL, not CC, to define the pole. FPOL is entered in Cartesian coordinates and remains in effect until the control encounters a block in which another FPOL is defined.

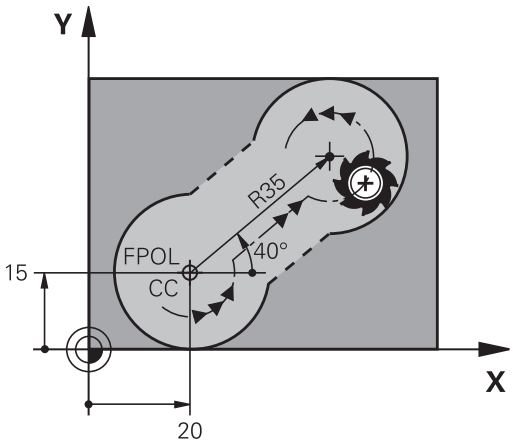

> A circle center that was calculated or programmed conventionally is then no longer valid as a pole or circle center for the new FK contour: If you enter conventional polar coordinates that refer to a pole from a CC block you have defined previously, then you must enter the pole again in a CC block after the FK contour.

Known data	Soft keys	
Circle center in Cartesian coordinates	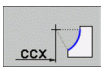	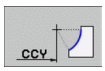
Center point in polar coordinates	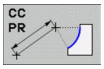	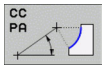
Rotational direction of the arc	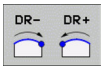	
Radius of an arc	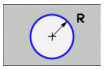	

Example NC blocks

```
10 FC CCX+20 CCY+15 DR+ R15
11 FPOL X+20 Y+15
12 FL AN+40
13 FC DR+ R15 CCPR+35 CCPA+40
```

Closed contours

You can identify the beginning and end of a closed contour with the CLSD soft key. This reduces the number of possible solutions for the last contour element.

Enter CLSD as an addition to another contour data entry in the first and last blocks of an FK section.

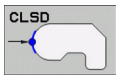

Beginning of contour:	CLSD+
End of contour:	CLSD–

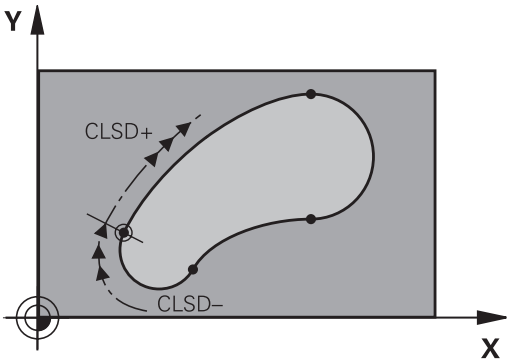

Example NC blocks

```
12 L X+5 Y+35 RL F500 M3
13 FC DR- R15 CLSD+ CCX+20 CCY+35
...
17 FCT DR- R+15 CLSD-
```

Auxiliary points

For both free-programmed straight lines and free-programmed circular arcs, you can enter the coordinates of auxiliary points that are located on the contour or in its proximity.

Auxiliary points on a contour

The auxiliary points are located on the straight line, the extension of the straight line, or on the circular arc.

Known data	Soft keys		
X coordinate of an auxiliary point P1 or P2 of a straight line	P1X	P2X	
Y coordinate of an auxiliary point P1 or P2 of a straight line	P1Y	P2Y	
X coordinate of an auxiliary point P1, P2 or P3 of a circular path	P1X	P2X	P3X
Y coordinate of an auxiliary point P1, P2 or P3 of a circular path	P1Y	P2Y	P3Y

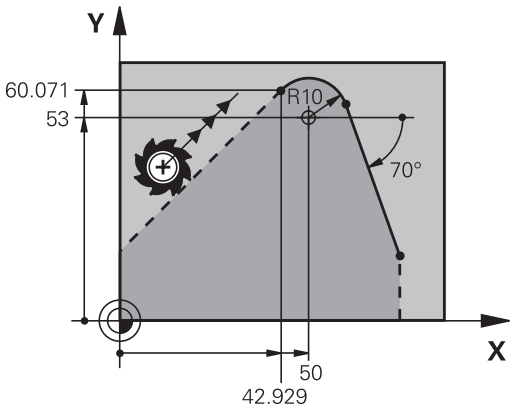

Auxiliary points near a contour

Known data	Soft keys	
X and Y coordinates of the auxiliary point near a straight line	PDX	PDY
Distance of auxiliary point to straight line	D	
X and Y coordinates of an auxiliary point near a circular arc	PDX	PDY
Distance of auxiliary point to circular arc	D	

Example NC blocks

```
13 FC DR- R10 P1X+42.929 P1Y+60.071
14 FLT AN-70 PDX+50 PDY+53 D10
```

Relative data

Data whose values are based on another contour element are called relative data. The soft keys and program words for entries begin with the letter **R** for **R**elative. The figure at right shows the entries that should be programmed as relative data.

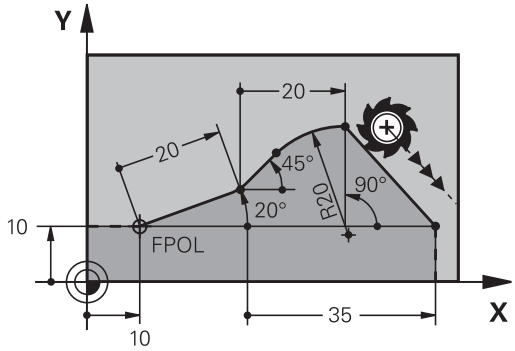

> The coordinates and angles for relative data are always programmed in incremental dimensions. You must also enter the block number of the contour element on which the data are based.
>
> The block number of the contour element on which the relative data are based can only be located up to 64 positioning blocks before the block in which you program the reference.
>
> If you delete a block on which relative data are based, the TNC will display an error message. Change the program first before you delete the block.

Data relative to block N: End point coordinates

Known data	Soft keys	
Cartesian coordinates relative to block N	RX N...	RY N...
Polar coordinates relative to block N	RPR N...	RPA N...

Example NC blocks

```
12 FPOL X+10 Y+10
13 FL PR+20 PA+20
14 FL AN+45
15 FCT IX+20 DR- R20 CCA+90 RX 13
16 FL IPR+35 PA+0 RPR 13
```

Data relative to block N: Direction and distance of the contour element

Known data	Soft key
Angle between a straight line and another element or between the entry tangent of the arc and another element	RAN N...
Straight line parallel to another contour element	PAR N...
Distance from a straight line to a parallel contour element	DP

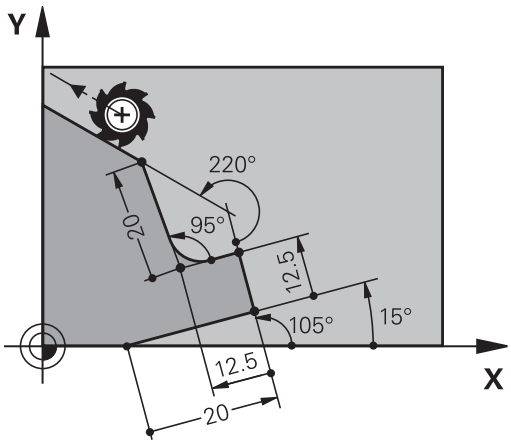

Example NC blocks

```
17 FL LEN 20 AN+15
18 FL AN+105 LEN 12.5
19 FL PAR 17 DP 12.5
20 FSELECT 2
21 FL LEN 20 IAN+95
22 FL IAN+220 RAN 18
```

Data relative to block N: Circle center CC

Known data	Soft key	
Cartesian coordinates of the circle center relative to block N	RCCX N...	RCCY N...
Polar coordinates of the circle center relative to block N	RCCPR N...	RCCPA N...

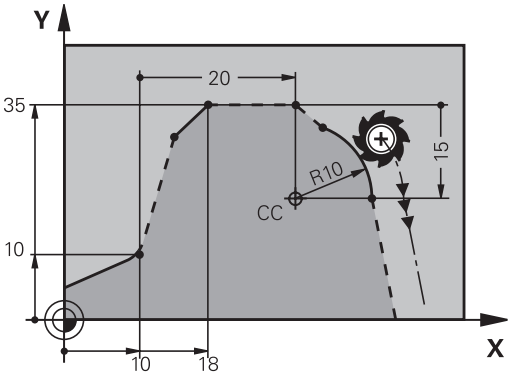

Example NC blocks

```
12 FL X+10 Y+10 RL
13 FL ...
14 FL X+18 Y+35
15 FL ...
16 FL ...
17 FC DR- R10 CCA+0 ICCX+20 ICCY-15 RCCX12 RCCY14
```

Example: FK programming 1

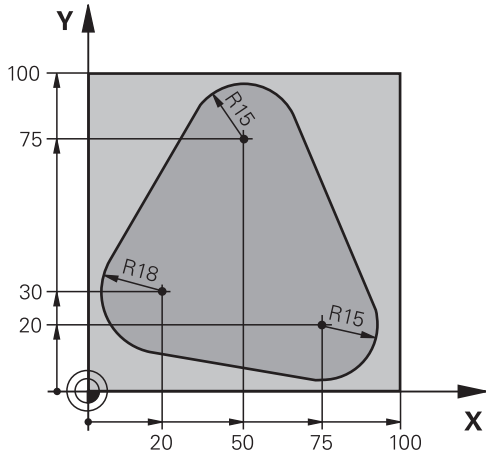

0 BEGIN PGM FK1 MM	
1 BLK FORM 0.1 Z X+0 Y+0 Z-20	Definition of workpiece blank
2 BLK FORM 0.2 X+100 Y+100 Z+0	
3 TOOL CALL 1 Z S500	Tool call
4 L Z+250 R0 FMAX	Retract the tool
5 L X-20 Y+30 R0 FMAX	Pre-position the tool
6 L Z-10 R0 F1000 M3	Move to working depth
7 APPR CT X+2 Y+30 CCA90 R+5 RL F250	Approach the contour on a circular arc with tangential connection
8 FC DR- R18 CLSD+ CCX+20 CCY+30	FK contour section:
9 FLT	Program all known data for each contour element
10 FCT DR- R15 CCX+50 CCY+75	
11 FLT	
12 FCT DR- R15 CCX+75 CCY+20	
13 FLT	
14 FCT DR- R18 CLSD- CCX+20 CCY+30	
15 DEP CT CCA90 R+5 F1000	Depart the contour on a circular arc with tangential connection
16 L X-30 Y+0 R0 FMAX	
17 L Z+250 R0 FMAX M2	Retract the tool, end program
18 END PGM FK1 MM	

Example: FK programming 2

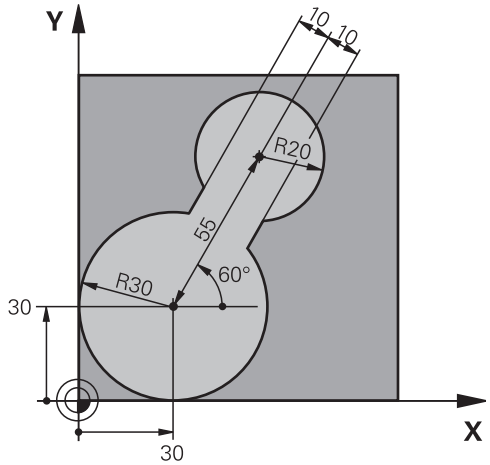

0 BEGIN PGM FK2 MM	
1 BLK FORM 0.1 Z X+0 Y+0 Z-20	Definition of workpiece blank
2 BLK FORM 0.2 X+100 Y+100 Z+0	
3 TOOL CALL 1 Z S4000	Tool call
4 L Z+250 R0 FMAX	Retract the tool
5 L X+30 Y+30 R0 FMAX	Pre-position the tool
6 L Z+5 R0 FMAX M3	Pre-position the tool in the tool axis
7 L Z-5 R0 F100	Move to working depth
8 APPR LCT X+0 Y+30 R5 RR F350	Approach the contour on a circular arc with tangential connection
9 FPOL X+30 Y+30	FK contour section:
10 FC DR- R30 CCX+30 CCY+30	Program all known data for each contour element
11 FL AN+60 PDX+30 PDY+30 D10	
12 FSELECT 3	
13 FC DR- R20 CCPR+55 CCPA+60	
14 FSELECT 2	
15 FL AN-120 PDX+30 PDY+30 D10	
16 FSELECT 3	
17 FC X+0 DR- R30 CCX+30 CCY+30	
18 FSELECT 2	
19 DEP LCT X+30 Y+30 R5	Depart the contour on a circular arc with tangential connection
20 L Z+250 R0 FMAX M2	Retract the tool, end program
21 END PGM FK2 MM	

Example: FK programming 3

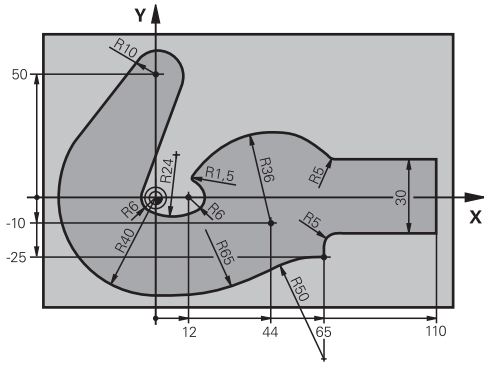

0 BEGIN PGM FK3 MM	
1 BLK FORM 0.1 Z X-45 Y-45 Z-20	Definition of workpiece blank
2 BLK FORM 0.2 X+120 Y+70 Z+0	
3 TOOL CALL 1 Z S4500	Tool call
4 L Z+250 R0 FMAX	Retract the tool
5 L X-70 Y+0 R0 FMAX	Pre-position the tool
6 L Z-5 R0 F1000 M3	Move to working depth
7 APPR CT X-40 Y+0 CCA90 R+5 RL F250	Approach the contour on a circular arc with tangential connection
8 FC DR- R40 CCX+0 CCY+0	FK contour section:
9 FLT	Program all known data for each contour element
10 FCT DR- R10 CCX+0 CCY+50	
11 FLT	
12 FCT DR+ R6 CCX+0 CCY+0	
13 FCT DR+ R24	
14 FCT DR+ R6 CCX+12 CCY+0	
15 FSELECT 2	
16 FCT DR- R1.5	
17 FCT DR- R36 CCX+44 CCY-10	
18 FSELECT 2	
19 FCT DR+ R5	
20 FLT X+110 Y+15 AN+0	
21 FL AN-90	
22 FL X+65 AN+180 PAR21 DP30	
23 RND R5	
24 FL X+65 Y-25 AN-90	
25 FC DR+ R50 CCX+65 CCY-75	
26 FCT DR- R65	
27 FSELECT 1	
28 FCT Y+0 DR- R40 CCX+0 CCY+0	
29 FSELECT 4	
30 DEP CT CCA90 R+5 F1000	Depart the contour on a circular arc with tangential connection
31 L X-70 R0 FMAX	

32 L Z+250 R0 FMAX M2	Retract the tool, end program
33 END PGM FK3 MM	

7

Programming: Subprograms and program section repeats

7.1 Labeling Subprograms and Program Section Repeats

Subprograms and program section repeats enable you to program a machining sequence once and then run it as often as necessary.

Label

The beginnings of subprograms and program section repeats are marked in a part program by labels **(LBL)**.

A LABEL is identified by a number between 1 and 999 or by a name you define. Each LABEL number or LABEL name can be set only once in the program with the LABEL SET. The number of label names you can enter is only limited by the internal memory.

> ⇨ Do not use a label number or label name more than once!

Label 0 (**LBL 0**) is used exclusively to mark the end of a subprogram and can therefore be used as often as desired.

7.2 Subprograms

Operating sequence

1 The TNC executes the part program up to calling a subprogram, **CALL LBL**.
2 The subprogram is then executed from beginning to end, **LBL 0**.
3 The TNC then resumes the part program from the block after the subprogram call **CALL LBL**

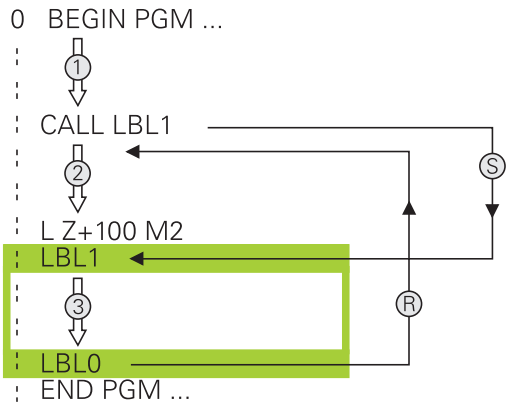

Programming notes

- A main program can contain up to 254 subprograms
- You can call subprograms in any sequence and as often as desired
- A subprogram cannot call itself
- Write subprograms at the end of the main program (behind the block with M2 or M30)
- If subprograms are located before the block with M2 or M30, they will be executed at least once even if they are not called

Programming a subprogram

LBL SET

- To mark the beginning, press the LBL SET key
- Enter the subprogram number. If you want to use a label name, press the LBL NAME soft key to switch to text entry
- To mark the end, press the LBL SET key and enter the label number "0"

Calling a subprogram

LBL CALL

- To call a subprogram, press the LBL CALL key
- **Label number**: Enter the label number of the subprogram you wish to call. If you want to use a label name, press the LBL NAME soft key to switch to text entry. If you want to enter the number of a string parameter as target address: Press the QS soft key; the TNC will then jump to the label name that is specified in the string parameter defined
- **Repeat REP**: Ignore the dialog question with the NO ENT key. Repeat REP is used only for program section repeats.

CALL LBL 0 is not permitted (Label 0 is only used to mark the end of a subprogram).

7.3 Program-section repeats

Label LBL

The beginning of a program section repeat is marked by the label **LBL**. The end of a program section repeat is identified by **CALL LBL n REPn**.

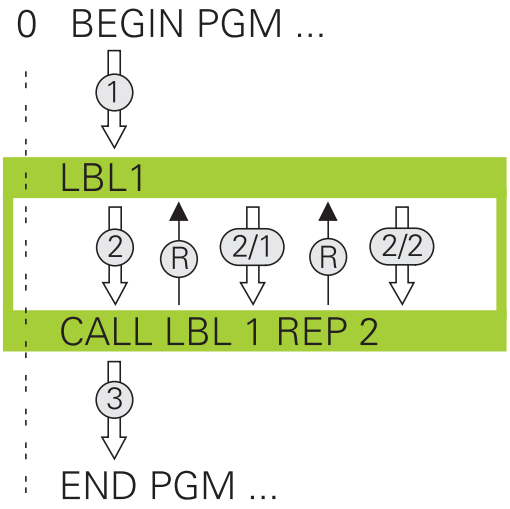

Operating sequence

1 The TNC executes the part program up to the end of the program section (**CALL LBL n REPn**)
2 Then the program section between the called LABEL and the label call **CALL LBL n REPn** is repeated the number of times entered after **REP**
3 The TNC resumes the part program after the last repetition.

Programming notes

- You can repeat a program section up to 65 534 times in succession
- The total number of times the program section is executed is always one more than the programmed number of repeats

Programming a program section repeat

LBL SET

- To mark the beginning, press the LBL SET key and enter a LABEL NUMBER for the program section you wish to repeat. If you want to use a label name, press the LBL NAME soft key to switch to text entry
- Enter the program section

Calling a program section repeat

LBL CALL

- Press the LBL CALL key
- **To call subprograms/section repeats**: Enter the label number of the subprogram to be called, then confirm with the ENT key. If you want to use a label name, press the " key to switch to text entry If you want to enter the number of a string parameter as target address: Press the QS soft key; the TNC will then jump to the label name that is specified in the string parameter defined
- **Repeat REP**: Enter the number of repeats, then confirm with the ENT key

7.4 Any desired program as subprogram

Operating sequence

If you want to program variable program calls in connection with string parameters, use the SEL PGM function.

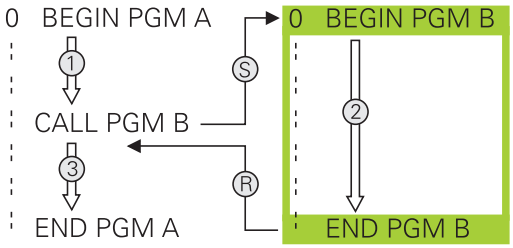

1 The TNC executes the part program up to the block in which another program is called with **CALL PGM**.
2 Then the other program is run from beginning to end.
3 The TNC then resumes the first part program (i.e. the calling program) with the block after the program call.

Programming notes

- No labels are needed to call any program as a subprogram
- The called program must not contain the miscellaneous functions M2 or M30. If you have defined subprograms with labels in the called program, you can then use M2 or M30 with the **FN 9: IF +0 EQU +0 GOTO LBL 99** jump function to force a jump over this program section
- The called program must not contain a **CALL PGM** call into the calling program, otherwise an infinite loop will result

7.4 Any desired program as subprogram

Calling any program as a subprogram

PGM CALL

- Select the functions for program call: Press the PGM CALL key

PROGRAM

- Press the PROGRAM soft key for the TNC to start the dialog for defining the program to be called. Use the screen keyboard to enter the path name (GOTO key), or

SELECT PROGRAM

- press the SELECT PROGRAM soft key for the TNC to display a selection window in which you can select the program to be called. Confirm with the END key

If the program you want to call is located in the same directory as the program you are calling it from, then you only need to enter the program name.

If the called program is not located in the same directory as the program you are calling it from, you must enter the complete path, e.g. **TNC:\ZW35\SCHRUPP\PGM1.H**

If you want to call a DIN/ISO program, enter the file type .I after the program name.

You can also call a program with Cycle **12 PGM CALL**.

As a rule, Q parameters are effective globally with a **PGM CALL**. So please note that changes to Q parameters in the called program can also influence the calling program.

Danger of collision!

Coordinate transformations that you define in the called program remain in effect for the calling program too, unless you reset them.

7.5 Nesting

Types of nesting

- Subprograms within a subprogram
- Program section repeats within a program section repeat
- Subprograms repeated
- Program section repeats within a subprogram

Nesting depth

The nesting depth is the number of successive levels in which program sections or subprograms can call further program sections or subprograms.

- Maximum nesting depth for subprograms: 19
- Maximum nesting depth for main program calls: 19, where a **CYCL CALL** acts like a main program call
- You can nest program section repeats as often as desired

Subprogram within a subprogram

Example NC blocks

0 BEGIN PGM UPGMS MM	
...	
17 CALL LBL "UP1"	Call the subprogram marked with LBL SP1
...	
35 L Z+100 R0 FMAX M2	Last program block of the main program (with M2)
36 LBL "UP1"	Beginning of subprogram SP1
...	
39 CALL LBL 2	Call the subprogram marked with LBL 2
...	
45 LBL 0	End of subprogram 1
46 LBL 2	Beginning of subprogram 2
...	
62 LBL 0	End of subprogram 2
63 END PGM UPGMS MM	

Program execution

1 Main program UPGMS is executed up to block 17.
2 Subprogram SP1 is called, and executed up to block 39.
3 Subprogram 2 is called, and executed up to block 62. End of subprogram 2 and return jump to the subprogram from which it was called.
4 Subprogram 1 is called, and executed from block 40 up to block 45. End of subprogram 1 and return jump to the main program UPGMS.
5 Main program UPGMS is executed from block 18 up to block 35. Return jump to block 1 and end of program.

Repeating program section repeats

Example NC blocks

0 BEGIN PGM REPS MM	
...	
15 LBL 1	Beginning of program section repeat 1
...	
20 LBL 2	Beginning of program section repeat 2
...	
27 CALL LBL 2 REP 2	The program section between LBL 2 and this block
...	(block 20) is repeated twice
35 CALL LBL 1 REP 1	The program section between LBL 1 and this block
...	(block 15) is repeated once
50 END PGM REPS MM	

Program execution

1 Main program REPS is executed up to block 27.
2 Program section between block 27 and block 20 is repeated twice.
3 Main program REPS is executed from block 28 to block 35.
4 Program section between block 35 and block 15 is repeated once (including the program section repeat between 20 and block 27).
5 Main program REPS is executed from block 36 to block 50 (end of program).

Repeating a subprogram

Example NC blocks

0 BEGIN PGM UPGREP MM	
...	
10 LBL 1	Beginning of program section repeat 1
11 CALL LBL 2	Subprogram call
12 CALL LBL 1 REP 2	The program section between LBL 1 and this block
...	(block 10) is repeated twice
19 L Z+100 R0 FMAX M2	Last block of the main program with M2
20 LBL 2	Beginning of subprogram
...	
28 LBL 0	End of subprogram
29 END PGM UPGREP MM	

Program execution

1 Main program UPGREP is executed up to block 11.
2 Subprogram 2 is called and executed.
3 Program section between block 12 and block 10 is repeated twice. This means that subprogram 2 is repeated twice.
4 Main program UPGREP is executed from block 13 to block 19. End of program.

7.6 Programming examples

Example: Milling a contour in several infeeds

Program sequence:

- Pre-position the tool to the workpiece surface
- Enter the infeed depth in incremental values
- Contour milling
- Repeat infeed and contour-milling

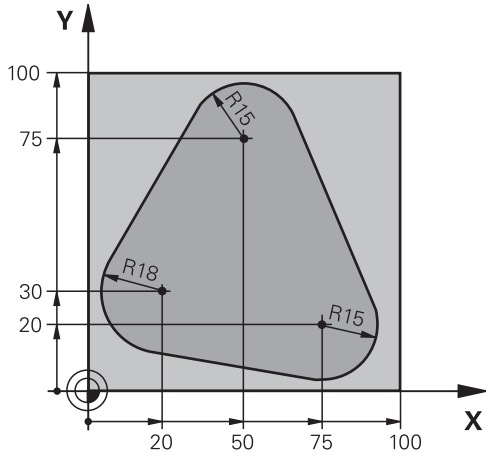

0 BEGIN PGM PGMWDH MM	
1 BLK FORM 0.1 Z X+0 Y+0 Z-40	
2 BLK FORM 0.2 X+100 Y+100 Z+0	
3 TOOL CALL 1 Z S500	Tool call
4 L Z+250 R0 FMAX	Retract the tool
5 L X-20 Y+30 R0 FMAX	Pre-position in the working plane
6 L Z+0 R0 FMAX M3	Pre-position to the workpiece surface
7 LBL 1	Set label for program section repeat
8 L IZ-4 R0 FMAX	Infeed depth in incremental values (in space)
9 APPR CT X+2 Y+30 CCA90 R+5 RL F250	Contour approach
10 FC DR- R18 CLSD+ CCX+20 CCY+30	Contour
11 FLT	
12 FCT DR- R15 CCX+50 CCY+75	
13 FLT	
14 FCT DR- R15 CCX+75 CCY+20	
15 FLT	
16 FCT DR- R18 CLSD- CCX+20 CCY+30	
17 DEP CT CCA90 R+5 F1000	Contour departure
18 L X-20 Y+0 R0 FMAX	Retract tool
19 CALL LBL 1 REP 4	Return jump to LBL 1; section is repeated a total of 4 times
20 L Z+250 R0 FMAX M2	Retract the tool, end program
21 END PGM PGMWDH MM	

Example: Groups of holes

Program sequence:

- Approach the groups of holes in the main program
- Call the group of holes (subprogram 1)
- Program the group of holes only once in subprogram 1

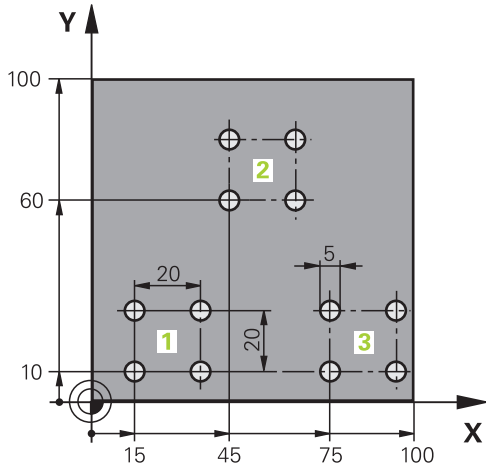

0 BEGIN PGM UP1 MM	
1 BLK FORM 0.1 Z X+0 Y+0 Z-20	
2 BLK FORM 0.2 X+100 Y+100 Z+0	
3 TOOL CALL 1 Z S5000	Tool call
4 L Z+250 R0 FMAX	Retract the tool
5 CYCL DEF 200 DRILLING	Define the DRILLING cycle
Q200=2 ;SET-UP CLEARANCE	
Q201=-10 ;DEPTH	
Q206=250 ;FEED RATE FOR PLNGNG	
Q202=5 ;PLUNGING DEPTH	
Q210=0 ;DWELL TIME AT TOP	
Q203=+0 ;SURFACE COORDINATE	
Q204=10 ;2ND SET-UP CLEARANCE	
Q211=0.25 ;DWELL TIME AT BOTTOM	
6 L X+15 Y+10 R0 FMAX M3	Move to starting point for group 1
7 CALL LBL 1	Call the subprogram for the group
8 L X+45 Y+60 R0 FMAX	Move to starting point for group 2
9 CALL LBL 1	Call the subprogram for the group
10 L X+75 Y+10 R0 FMAX	Move to starting point for group 3
11 CALL LBL 1	Call the subprogram for the group
12 L Z+250 R0 FMAX M2	End of main program
13 LBL 1	Beginning of subprogram 1: Group of holes
14 CYCL CALL	Hole 1
15 L IX+20 R0 FMAX M99	Move to 2nd hole, call cycle
16 L IY+20 R0 FMAX M99	Move to 3rd hole, call cycle
17 L IX-20 R0 FMAX M99	Move to 4th hole, call cycle
18 LBL 0	End of subprogram 1
19 END PGM UP1 MM	

Example: Group of holes with several tools

Program sequence:

- Program the fixed cycles in the main program
- Call the entire hole pattern (subprogram 1)
- Approach the groups of holes in subprogram 1, call group of holes (subprogram 2)
- Program the group of holes only once in subprogram 2

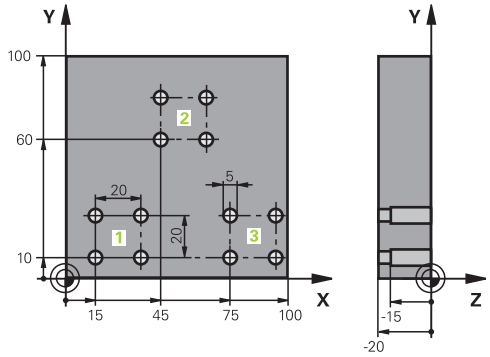

0 BEGIN PGM UP2 MM	
1 BLK FORM 0.1 Z X+0 Y+0 Z-20	
2 BLK FORM 0.2 X+100 Y+100 Z+0	
3 TOOL CALL 1 Z S5000	Call tool: center drill
4 L Z+250 R0 FMAX	Retract the tool
5 CYCL DEF 200 DRILLING	Define the CENTERING cycle
Q200=2 ;SET-UP CLEARANCE	
Q202=-3 ;DEPTH	
Q206=250 ;FEED RATE FOR PLNGNG	
Q202=3 ;PLUNGING DEPTH	
Q210=0 ;DWELL TIME AT TOP	
Q203=+0 ;SURFACE COORDINATE	
Q204=10 ;2ND SET-UP CLEARANCE	
Q211=0.25 ;DWELL TIME AT BOTTOM	
6 CALL LBL 1	Call subprogram 1 for the entire hole pattern
7 L Z+250 R0 FMAX M6	Tool change
8 TOOL CALL 2 Z S4000	Call tool: drill
9 FN 0: Q201 = -25	New depth for drilling
10 FN 0: Q202 = +5	New plunging depth for drilling
11 CALL LBL 1	Call subprogram 1 for the entire hole pattern
12 L Z+250 R0 FMAX M6	Tool change
13 TOOL CALL 3 Z S500	Call tool: reamer

14 CYCL DEF 201 REAMING	Cycle definition: REAMING
Q200=2 ;SET-UP CLEARANCE	
Q201=-15 ;DEPTH	
Q206=250 ;FEED RATE FOR PLNGNG	
Q211=0.5 ;DWELL TIME AT DEPTH	
Q208=400 ;RETRACTION FEED RATE	
Q203=+0 ;SURFACE COORDINATE	
Q204=10 ;2ND SET-UP CLEARANCE	
15 CALL LBL 1	Call subprogram 1 for the entire hole pattern
16 L Z+250 R0 FMAX M2	End of main program
17 LBL 1	Beginning of subprogram 1: Entire hole pattern
18 L X+15 Y+10 R0 FMAX M3	Move to starting point for group 1
19 CALL LBL 2	Call subprogram 2 for the group
20 L X+45 Y+60 R0 FMAX	Move to starting point for group 2
21 CALL LBL 2	Call subprogram 2 for the group
22 L X+75 Y+10 R0 FMAX	Move to starting point for group 3
23 CALL LBL 2	Call subprogram 2 for the group
24 LBL 0	End of subprogram 1
25 LBL 2	Beginning of subprogram 2: Group of holes
26 CYCL CALL	1st hole with active fixed cycle
27 L IX+20 R0 FMAX M99	Move to 2nd hole, call cycle
28 L IY+20 R0 FMAX M99	Move to 3rd hole, call cycle
29 L IX-20 R0 FMAX M99	Move to 4th hole, call cycle
30 LBL 0	End of subprogram 2
31 END PGM UP2 MM	

8

Programming: Q Parameters

8.1 Principle and overview of functions

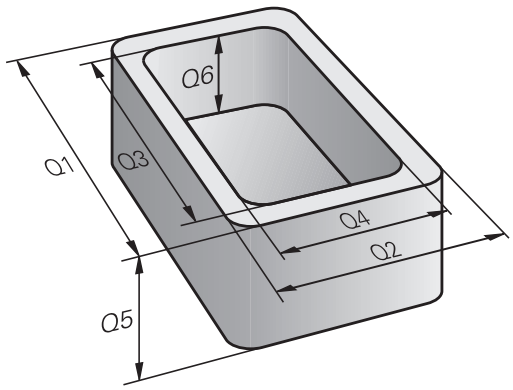

You can program entire families of parts in a single part program. You do this by entering variables called Q parameters instead of fixed numerical values.

Q parameters can represent information such as:

- Coordinate values
- Feed rates
- Spindle speeds
- Cycle data

Q parameters also enable you to program contours that are defined with mathematical functions. You can also use Q parameters to make the execution of machining steps depend on logical conditions. In conjunction with FK programming you can also combine contours that do not have NC-compatible dimensions with Q parameters.

Q parameters are designated by letters and a number between 0 and 1999. Parameters that take effect in different manners are available. Please refer to the following table:

Meaning	Range
Freely applicable parameters, as long as no overlapping with SL cycles can occur. They are globally effective for all programs stored in the TNC memory.	**Q0** to **Q99**
Parameters for special TNC functions	**Q100** to **Q199**
Parameters that are primarily used for cycles, globally effective for all programs stored in the TNC memory	**Q200** to **Q1199**
Parameters that are primarily used for OEM cycles, and are globally effective for all programs stored in the TNC memory. This may require coordination with the machine manufacturer or supplier	**Q1200** to **Q1399**
Parameters that are primarily used for **call-active** OEM cycles, globally effective for all programs that are stored in the TNC memory	**Q1400** to **Q1499**
Parameters that are primarily used for **Def-active** OEM cycles, globally effective for all programs that are stored in the TNC memory	**Q1500** to **Q1599**

Meaning	Range
Freely applicable parameters, globally effective for all programs stored in the TNC memory	**Q1600** to **Q1999**
Freely usable **QL** parameters, only effective locally (within a program)	**QL0** to **QL499**
Freely usable **QR** parameters that are nonvolatile, i.e. they **r**emain in effect even after a power interruption	**QR0** to **QR499**

QS parameters (the **S** stands for string) are also available on the TNC and enable you to process texts. In principle, the same ranges are available for **QS** parameters as for Q parameters (see table above).

Note that for the **QS** parameters the **QS100** to **QS199** range is reserved for internal texts.

Local parameters QL are only effective within the respective program, and are not applied as part of program calls or macros.

Programming notes

You can mix Q parameters and fixed numerical values within a program.

Q parameters can be assigned numerical values between –999 999 999 and +999 999 999. The input range is limited to 15 digits, of which 9 may be before the decimal point. Internally the TNC calculates numbers up to a value of 10^{10}.

You can assign a maximum of 254 characters to **QS** parameters.

Some Q and QS parameters are always assigned the same data by the TNC. For example, **Q108** is always assigned the current tool radius (See "Preassigned Q parameters").

The TNC saves numerical values internally in a binary number format (standard IEEE 754). Due to this standardized format some decimal numbers do not have an exact binary representation (round-off error). Keep this in mind especially when you use calculated Q-parameter contents for jump commands or positioning movements.

Calling Q parameter functions

When you are writing a part program, press the "Q" key (in the numeric keypad for numerical input and axis selection, below the +/– key). The TNC then displays the following soft keys:

Function group	Soft key	Page
Basic arithmetic (assign, add, subtract, multiply, divide, square root)	BASIC ARITHM.	240
Trigonometric functions	TRIGO-NOMETRY	242
Function for calculating circles	CIRCLE CALCU-LATION	243
If/then conditions, jumps	JUMP	244
Other functions	DIVERSE FUNCTION	248
Entering formulas in the part program	FORMULA	279
Function for machining complex contours	CONTOUR FORMULA	See User's Manual for Cycles

The TNC shows the soft keys Q, QL and QR when you are defining or assigning a Q parameter. First press one of these soft keys to select the desired type of parameter, and then enter the parameter number.

If you have a USB keyboard connected, you can press the Q key to open the dialog for entering a formula.

8.2 Part families—Q parameters in place of numerical values

Application

The Q parameter function **FN 0: ASSIGN** assigns numerical values to Q parameters. This enables you to use variables in the program instead of fixed numerical values.

Example NC blocks

15 FN O: Q10=25	Assign
...	Q10 is assigned the value 25
25 L X +Q10	Means L X +25

You need write only one program for a whole family of parts, entering the characteristic dimensions as Q parameters.

To program a particular part, you then assign the appropriate values to the individual Q parameters.

Example: Cylinder with Q parameters

Cylinder radius:	R = Q1
Cylinder height:	H = Q2
Cylinder Z1:	Q1 = +30 Q2 = +10
Cylinder Z2:	Q1 = +10 Q2 = +50

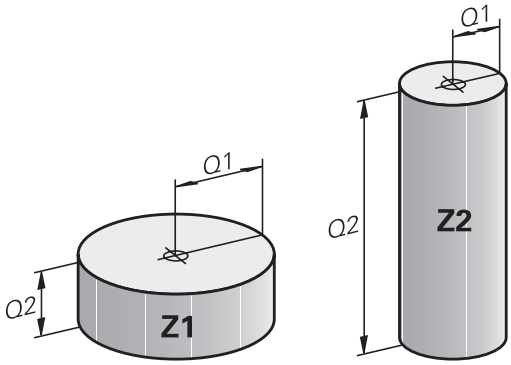

8.3 Describing contours with mathematical functions

Application

The Q parameters listed below enable you to program basic mathematical functions in a part program:

- Select a Q-parameter function: Press the Q key (in the numerical keypad at right). The Q-parameter functions are displayed in a soft-key row
- Select the mathematical functions: Press the BASIC ARITHMETIC soft key. The TNC then displays the following soft keys:

Overview

Function	Soft key
FN 0: ASSIGN e.g. **FN 0: Q5 = +60** Directly assign value	FN0 X = Y
FN 1: ADDITION z.B. **FN 1: Q1 = -Q2 + -5** Form and assign sum from two values	FN1 X + Y
FN 2: SUBTRACTION e.g. **FN 2: Q1 = +10 - +5** Form and assign difference between two values	FN2 X - Y
FN 3: MULTIPLICATION e.g. **FN 3: Q2 = +3 * +3** Form and assign the product of two values	FN3 X * Y
FN 4: DIVISION e.g. **FN 4: Q4 = +8 DIV +Q2** Form and assign the quotient of two values **Not permitted:** Division by 0	FN4 X / Y
FN 5: SQUARE ROOT e.g. **FN 5: Q20 = SQRT 4** Form and assign the square root of a value **Not permitted:** Square root from negative value	FN5 SQRT

To the right of the "=" character you can enter the following:

- Two numbers
- Two Q parameters
- A number and a Q parameter

The Q parameters and numerical values in the equations can be entered with positive or negative signs.

Programming fundamental operations

Example 1

Q

- Select the Q parameter functions: Press the Q key

BASIC ARITHM.

- Select the mathematical functions: Press the BASIC ARITHMETIC soft key

FN0 X = Y

- Select the Q parameter function ASSIGN: Press the FN0 X = Y soft key

PARAMETER NUMBER FOR RESULT?

ENT

- **12** Enter the Q parameter number and confirm with the ENT key

FIRST VALUE / PARAMETER?

ENT

- Enter **10**: Assign the numerical value 10 to Q5 and confirm with the ENT soft key.

Program blocks in the TNC

```
16 FN 0: Q5 = +10
17 FN 3: Q12 = +Q5 * +7
```

Example 2

Q

- Select the Q parameter functions: Press the Q key

BASIC ARITHM.

- Select the mathematical functions: Press the BASIC ARITHMETIC soft key

FN3 X * Y

- To select the Q parameter function MULTIPLICATION, press the FN3 X * Y soft key

PARAMETER NUMBER FOR RESULT?

ENT

- **12** Enter the Q parameter number and confirm with the ENT key

FIRST VALUE / PARAMETER?

ENT

- Enter **Q5** as the first value and confirm with the ENT key.

SECOND VALUE / PARAMETER?

ENT

- Enter **7** as the second value and confirm with the ENT key.

8.4 Angle functions (trigonometry)

Definitions

Sine: sin α = a / c

Cosine: cos α = b / c

Tangent: tan α = a / b = sin α / cos α

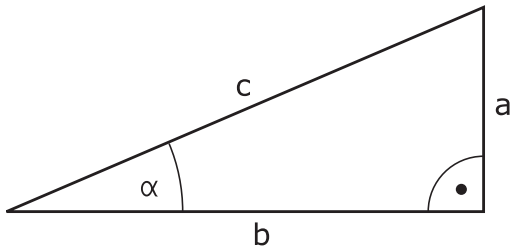

where

- c is the side opposite the right angle
- a is the side opposite the angle α
- b is the third side.

The TNC can find the angle from the tangent:

α = arctan (a / b) = arctan (sin α / cos α)

Example:

a = 25 mm

b = 50 mm

α = arctan (a / b) = arctan 0.5 = 26.57°

Furthermore:

$a^2 + b^2 = c^2$ (where $a^2 = a \times a$)

$c = \sqrt{(a^2 + b^2)}$

Programming trigonometric functions

Press the ANGLE FUNCTION soft key to call the trigonometric functions. The TNC then displays the soft keys below.

Programming: Compare "Example: Programming fundamental operations."

Function	Soft key
FN 6: SINE e.g. **FN 6: Q20 = SIN-Q5** Define and assign the sine of an angle in degrees (°)	FN6 SIN(X)
FN 7: COSINE e.g. **FN 7: Q21 = COS-Q5** Define and assign the cosine of an angle in degrees (°)	D7 COS(X)
FN 8: SQUARE ROOT FROM SQUARE SUM e.g. **FN 8: Q10 = +5 LEN +4** Form and assign length from two values	FN8 X LEN Y
FN 13: ANGLE e.g. **FN 13: Q20 = +25 ANG-Q1** Form and assign an angle with arctan from two sides or with sine and cosine of the angle (0 < angle < 360°)	FN13 X ANG Y

8.5 Calculation of circles

Application

The TNC can use the functions for calculating circles to calculate the circle center and the circle radius from three or four given points on the circle. The calculation is more accurate if four points are used.

Application: These functions can be used if you wish to determine the location and size of a hole or a pitch circle using the programmable probing function.

Function	Soft key
FN23: Determining the CIRCLE DATA from three points e.g. **FN 23: Q20 = CDATA Q30**	FN23 3 POINTS OF CIRCLE

The coordinate pairs of three points on a circle must be saved in Q30 and the following five parameters—in this case, up to Q35.

The TNC then saves the circle center in the reference axis (X if spindle axis is Z) in parameter Q20, the circle center in the minor axis (Y if spindle axis is Z) in parameter Q21, and the circle radius in parameter Q22.

Function	Soft key
FN24: Determining the CIRCLE DATA from four points e.g. **FN 24: Q20 = CDATA Q30**	FN24 4 POINTS OF CIRCLE

The coordinate pairs of four points on a circle must be saved in Q30 and the following seven parameters—in this case, up to Q37.

The TNC then saves the circle center in the reference axis (X if spindle axis is Z) in parameter Q20, the circle center in the minor axis (Y if spindle axis is Z) in parameter Q21, and the circle radius in parameter Q22.

Note that **FN 23** and **FN 24** automatically overwrite the resulting parameter and the two following parameters.

8.6 If-then decisions with Q parameters

Application

The TNC can make logical if-then decisions by comparing a Q parameter with another Q parameter or with a numerical value. If the condition is fulfilled, the TNC continues the program at the label that is programmed after the condition (for information on labels, See "Labeling Subprograms and Program Section Repeats", page 220). If it is not fulfilled, the TNC continues with the next block.

To call another program as a subprogram, enter a **PGM CALL** program call after the block with the target label.

Unconditional jumps

An unconditional jump is programmed by entering a conditional jump whose condition is always true. Example:

FN 9: IF+10 EQU+10 GOTO LBL1

Programming if-then decisions

Press the JUMP soft key to call the if-then conditions. The TNC then displays the following soft keys:

Function	Soft key
FN 9: IF EQUAL TO, JUMP e.g. **FN 9: IF +Q1 EQU +Q3 GOTO LBL "UPCAN25"** If both values or parameters are equal, jump to specified label	FN9 IF X EQ Y GOTO
FN 10: IF NOT EQUAL TO, JUMP e.g. **FN 10: IF +10 NE -Q5 GOTO LBL 10** If both values or parameters are not equal, jump to specified label	FN10 IF X NE Y GOTO
FN 11: IF GREATER, JUMP e.g. **FN 11: IF+Q1 GT+10 GOTO LBL 5** If the first value or parameter is greater than the second value or parameter, jump to specified label	FN11 IF X GT Y GOTO
FN 12: IF SMALLER, JUMP e.g. **FN 12: IF+Q5 LT+0 GOTO LBL “ANYNAME“** If the first value or parameter is smaller than the second value or parameter, jump to specified label	FN12 IF X LT Y GOTO

Abbreviations used:

IF	:	If
EQU	:	Equal to
NE	:	Not equal
GT	:	Greater than
LT	:	Less than
GOTO	:	Go to

8.7 Checking and changing Q parameters

Procedure

You can check Q parameters in all operating modes (when writing, testing and running programs) and also edit them.

- If you are in a program run, interrupt it if required (for example, by pressing the machine STOP button and the INTERNAL STOP soft key). If you are in a test run, interrupt it.

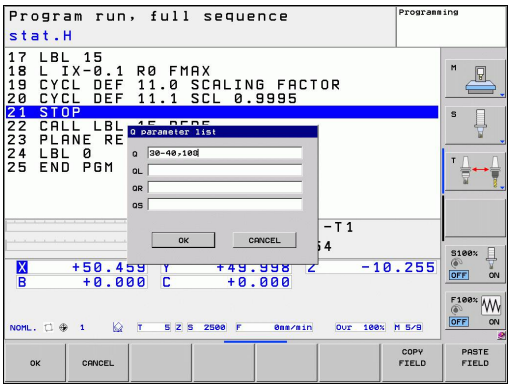

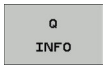

- Call Q-parameter functions: Press the Q INFO soft key or the Q key.
- The TNC lists all parameters and their current values. Use the arrow keys or the GOTO key to select the desired parameter.
- If you would like to change the value, press the EDIT CURRENT FIELD soft key, enter the new value, and confirm with the ENT key.
- To leave the value unchanged, press the PRESENT VALUE soft key or end the dialog with the END key.

> The parameters used by the TNC internally or in cycles are provided with comments.
> If you want to check or edit local, global or string parameters, press the SHOW PARAMETERS Q QL QR QS soft key. The TNC then displays the specific parameter type. The functions previously described also apply.

You can have the Q parameters be shown in the additional status display in the Manual, El. Handwheel, Single Block, Full Sequence and Test Run operating modes.

- If you are in a program run, interrupt it if required (for example, by pressing the machine STOP button and the INTERNAL STOP soft key). If you are in a test run, interrupt it.

- Call the soft-key row for screen layout

PROGRAM + STATUS

- Select the screen layout with additional status display: In the right half of the screen, the TNC shows the **Overview** status form

STATUS OF Q PARAM.

- Press the STATUS OF Q PARAM. soft key

Q PARAMETER LIST

- Press the Q PARAMETER LIST soft key
- The TNC opens a pop-up window in which you can enter the desired range for display of the Q parameters or string parameters. Multiple Q parameters are entered separated by commas (e.g. Q 1,2,3,4). To define display ranges, enter a hyphen (e.g. Q 10-14).

8.8 Additional functions

Overview

Press the DIVERSE FUNCTION soft key to call the additional functions. The TNC then displays the following soft keys:

Function	Soft key	Page
FN 14:ERROR Displaying error messages	FN14 ERROR=	249
FN 16:F-PRINT Output of formatted texts or Q parameter values	FN16 F-PRINT	253
FN 18:SYS-DATUM READ Reading system data	FN18 SYS-DATUM READ	257
FN 19:PLC Transfer values to the PLC	FN19 PLC=	266
FN 20:WAIT FOR NC and PLC synchronization	FN20 WAIT FOR	266
FN 29:PLC Transfer up to eight values to the PLC	FN29 PLC LIST=	268
FN 37:EXPORT Export local Q parameters or QS parameters into a calling program	FN37 EXPORT	268
FN 26:TABOPEN Opening a freely definable table	FN26 OPEN TABLE	344
FN 27:TABWRITE Write to a freely definable table	FN27 WRITE TO TABLE	345
FN 28:TABREAD Read from a freely definable table	FN28 READ FROM TABLE	346

FN 14: ERROR: Displaying error messages

With the function **FN 14: ERROR** you can call messages under program control. The messages are predefined by the machine tool builder or by HEIDENHAIN. Whenever the TNC comes to a block with **FN 14** in the Program Run or Test Run mode, it interrupts the program run and displays a message. The program must then be restarted. The error numbers are listed in the table below.

Range of error numbers	Standard dialog text
0 ... 999	Machine-dependent dialog
1000 ... 1199	Internal error messages (see table at right)

Example NC block

The TNC is to display the text stored under error number 254:

```
180 FN 14:ERROR = 254
```

Error message predefined by HEIDENHAIN

Error number	Text
1000	Spindle?
1001	Tool axis is missing
1002	Tool radius too small
1003	Tool radius too large
1004	Range exceeded
1005	Start position incorrect
1006	ROTATION not permitted
1007	SCALING FACTOR not permitted
1008	MIRROR IMAGE not permitted
1009	Datum shift not permitted
1010	Feed rate is missing
1011	Input value incorrect
1012	Incorrect sign
1013	Entered angle not permitted
1014	Touch point inaccessible
1015	Too many points
1016	Contradictory input
1017	CYCL incomplete
1018	Plane wrongly defined
1019	Wrong axis programmed
1020	Wrong rpm
1021	Radius comp. undefined
1022	Rounding-off undefined
1023	Rounding radius too large
1024	Program start undefined
1025	Excessive nesting

Error number	Text
1026	Angle reference missing
1027	No fixed cycle defined
1028	Slot width too small
1029	Pocket too small
1030	Q202 not defined
1031	Q205 not defined
1032	Q218 must be greater than Q219
1033	CYCL 210 not permitted
1034	CYCL 211 not permitted
1035	Q220 too large
1036	Q222 must be greater than Q223
1037	Q244 must be greater than 0
1038	Q245 must not equal Q246
1039	Angle range must be under 360°
1040	Q223 must be greater than Q222
1041	Q214: 0 not permitted
1042	Traverse direction not defined
1043	No datum table active
1044	Position error: center in axis 1
1045	Position error: center in axis 2
1046	Hole diameter too small
1047	Hole diameter too large
1048	Stud diameter too small
1049	Stud diameter too large
1050	Pocket too small: rework axis 1
1051	Pocket too small: rework axis 2
1052	Pocket too large: scrap axis 1
1053	Pocket too large: scrap axis 2
1054	Stud too small: scrap axis 1
1055	Stud too small: scrap axis 2
1056	Stud too large: rework axis 1
1057	Stud too large: rework axis 2
1058	TCHPROBE 425: length exceeds max
1059	TCHPROBE 425: length below min
1060	TCHPROBE 426: length exceeds max
1061	TCHPROBE 426: length below min
1062	TCHPROBE 430: diameter too large
1063	TCHPROBE 430: diameter too small
1064	No measuring axis defined
1065	Tool breakage tolerance exceeded

Error number	Text
1066	Enter Q247 unequal to 0
1067	Enter Q247 greater than 5
1068	Datum table?
1069	Enter Q351 unequal to 0
1070	Thread depth too large
1071	Missing calibration data
1072	Tolerance exceeded
1073	Block scan active
1074	ORIENTATION not permitted
1075	3-D ROT not permitted
1076	Activate 3-D ROT
1077	Enter depth as negative
1078	Q303 in meas. cycle undefined!
1079	Tool axis not allowed
1080	Calculated values incorrect
1081	Contradictory meas. points
1082	Incorrect clearance height
1083	Contradictory plunge type
1084	This fixed cycle not allowed
1085	Line is write-protected
1086	Oversize greater than depth
1087	No point angle defined
1088	Contradictory data
1089	Slot position 0 not allowed
1090	Enter an infeed not equal to 0
1091	Switchover of Q399 not allowed
1092	Tool not defined
1093	Tool number not allowed
1094	Tool name not allowed
1095	Software option not active
1096	Kinematics cannot be restored
1097	Function not permitted
1098	Contradictory workpc. blank dim.
1099	Measuring position not allowed
1100	Kinematic access not possible
1101	Meas. pos. not in traverse range
1102	Preset compensation not possible
1103	Tool radius too large
1104	Plunging type is not possible
1105	Plunge angle incorrectly defined

Error number	Text
1106	Angular length is undefined
1107	Slot width is too large
1108	Scaling factors not equal
1109	Tool data inconsistent

FN 16: F-PRINT: Output of formatted texts and Q parameter values

With **FN 16** you can also output to the screen any messages from the NC program. Such messages are displayed by the TNC in a pop-up window.

The function **FN 16: F-PRINT** transfers Q parameter values and texts in a selectable format. If you send the values, the TNC saves the data in the file that you defined in the **FN 16** block.

To output the formatted texts and Q-parameter values, create a text file with the TNC's text editor. In this file you then define the output format and Q parameters you want to output.

Example of a text file to define the output format:

```
"MEASURING LOG OF IMPELLER CENTER OF GRAVITY";
"DATE: %2d-%2d-%4d",DAY,MONTH,YEAR4;
"TIME: %2d:%2d:%2d",HOUR,MIN,SEC;
"NO. OF MEASURED VALUES: = 1";
"X1 = %9.3LF", Q31;
"Y1 = %9.3LF", Q32;
"Z1 = %9.3LF", Q33;
```

When you create a text file, use the following formatting functions:

Special characters	Function
"……."	Define output format for texts and variables between the quotation marks
%9.3LF	Define the format for Q parameters: 9 total characters (incl. decimal point), of which 3 are after the decimal, Long, Floating (decimal number)
%S	Format for text variable
%d	Format for integer
,	Separation character between output format and parameter
;	End of block character
\n	Line break

The following functions allow you to include the following additional information in the protocol log file:

Keyword	Function
CALL_PATH	Indicates the path for the NC program where you will find the FN16 function. Example: "Measuring program: %S",CALL_PATH;
M_CLOSE	Closes the file to which you are writing with FN16. Example: M_CLOSE;
M_APPEND	Upon renewed output, appends the log to the existing log. Example: M_APPEND;
M_APPEND_MAX	Upon renewed output, appends the log to the existing log until the maximum specified file size in kilobytes is exceeded. Example: M_APPEND_MAX1024;
M_TRUNCATE	Overwrites the log upon renewed output. Example: M_TRUNCATE;
L_ENGLISH	Outputs text only for English conversational language
L_GERMAN	Outputs text only for German conversational language
L_CZECH	Outputs text only for Czech conversational language
L_FRENCH	Outputs text only for French conversational language
L_ITALIAN	Outputs text only for Italian conversational language
L_SPANISH	Outputs text only for Spanish conversational language
L_SWEDISH	Outputs text only for Swedish conversational language
L_DANISH	Outputs text only for Danish conversational language
L_FINNISH	Outputs text only for Finnish conversational language
L_DUTCH	Outputs text only for Dutch conversational language
L_POLISH	Outputs text only for Polish conversational language
L_PORTUGUE	Outputs text only for Portuguese conversational language
L_HUNGARIA	Outputs text only for Hungarian conversational language
L_SLOVENIAN	Outputs text only for Slovenian conversational language
L_ALL	Outputs text independently of the conversational language

Keyword	Function
HOUR	Number of hours from the real-time clock
MIN	Number of minutes from the real-time clock
SEC	Number of seconds from the real-time clock
DAY	Day from the real-time clock
MONTH	Month as a number from the real-time clock
STR_MONTH	Month as a string abbreviation from the real-time clock
YEAR2	Two-digit year from the real-time clock
YEAR4	Four-digit year from the real-time clock

In the part program, program FN 16: F-PRINT to activate the output:

```
96 FN 16: F-PRINT TNC:\MASKE\MASKE1.A/ TNC:\PROT1.TXT
```

The TNC then creates the file PROT1.TXT:

MEASURING LOG OF IMPELLER CENTER OF GRAVITY

DATE: 27:11:2001

TIME: 8:56:34

NO. OF MEASURED VALUES : = 1

X1 = 149.360

Y1 = 25.509

Z1 = 37.000

If you output the same file more than once in the program, the TNC appends all texts to the end of the texts already output within the target file.

If you use **FN 16** more than once in the program, the TNC saves all texts in the file that you defined in the **FN 16** function. The file is not output until the TNC reads the **END PGM** block, or you press the NC stop button, or you close the file with **M_CLOSE.**

In the **FN 16** block, program the format file and the log file with their respective extensions.

If you enter only the file name for the path of the log file, the TNC saves the log file in the directory in which the NC program with the **FN 16** function is located.

You can define a standard path for outputting protocol files via the user parameters **fn16DefaultPath** and **fn16DefaultPathSim** (Program Test).

Displaying messages on the TNC screen

You can also use the function **FN 16** to display any messages from the NC program in a pop-up window on the TNC screen. This makes it easy to display explanatory texts, including long texts, at any point in the program in a way that the user has to react to them. You can also display Q parameter contents if the protocol description file contains such instructions.

For the message to appear on the TNC screen, you need only enter **SCREEN:** as the name of the protocol file.

```
96 FN 16: F-PRINT TNC:\MASKE\MASKE1.A/SCREEN:
```

If the message has more lines than fit in the pop-up window, you can use the arrow keys to page in the window.

To close the pop-up window, press the CE key. To have the program close the window, program the following NC block:

```
96 FN 16: F-PRINT TNC:\MASKE\MASKE1.A/SCLR:
```

All the previously described conventions apply to the protocol description file.

If you output the same file more than once in the program, the TNC appends all texts to the end of the texts already output within the target file.

Exporting messages

You can also use the **FN 16** function in the NC program in order to externally save the files generated with **FN 16**. Two possibilities are available for this:

Enter the complete target path in the **FN 16** function:

```
96 FN 16: F-PRINT TNC:\MSK\MSK1.A / PC325:\LOG\PRO1.TXT
```

All the previously described conventions apply to the protocol description file.

If you output the same file more than once in the program, the TNC appends all texts to the end of the texts already output within the target file.

FN 18: SYS-DATUM READ: Reading system data

With the **FN 18: SYS-DATUM READ** function you can read system data and store them in Q parameters. You select the system data through a group name (ID number), and additionally through a number and an index.

Group name, ID no.	Number	Index	Meaning
Program information, 10	3	-	Number of the active fixed cycle
	103	Q parameter number	Relevant within NC cycles; for inquiry as to whether the Q parameter given under IDX was explicitly stated in the associated CYCLE DEF.
System jump addresses, 13	1	-	Label jumped to during M2/M30 instead of ending the current program. Value = 0: M2/M30 has the normal effect
	2	-	Label jumped to if FN14: ERROR after the NC CANCEL reaction instead of aborting the program with an error. The error number programmed in the FN14 command can be read under ID992 NR14. Value = 0: FN14 has the normal effect.
	3	-	Label jumped to in the event of an internal server error (SQL, PLC, CFG) instead of aborting the program with an error message. Value = 0: Server error has the normal effect.
Machine status, 20	1	-	Active tool number
	2	-	Prepared tool number
	3	-	Active tool axis 0=X, 1=Y, 2=Z, 6=U, 7=V, 8=W
	4	-	Programmed spindle speed
	5	-	Active spindle condition: -1=not defined, 0=M3 active, 1=M4 active, 2=M5 after M3, 3=M5 after M4
	7	-	Gear range
	8	-	Coolant status: 0=off, 1=on
	9	-	Active feed rate
	10	-	Index of prepared tool
	11	-	Index of active tool
Channel data, 25	1	-	Channel number

Group name, ID no.	Number	Index	Meaning
Cycle parameter, 30	1	-	Set-up clearance of active fixed cycle
	2	-	Drilling depth / milling depth of active fixed cycle
	3	-	Plunging depth of active fixed cycle
	4	-	Feed rate for pecking in active fixed cycle
	5	-	1st side length for rectangular pocket cycle
	6	-	2nd side length for rectangular pocket cycle
	7	-	1st side length for slot cycle
	8	-	2nd side length for slot cycle
	9	-	Radius for circular pocket cycle
	10	-	Feed rate for milling in active fixed cycle
	11	-	Direction of rotation for active fixed cycle
	12	-	Dwell time for active fixed cycle
	13	-	Thread pitch for Cycles 17, 18
	14	-	Finishing allowance for active fixed cycle
	15	-	Direction angle for rough out in active fixed cycle
	21	-	Probing angle
	22	-	Probing path
	23	-	Probing feed rate
Modal condition, 35	1	-	Dimensions: 0 = absolute (G90) 1 = incremental (G91)
Data for SQL tables, 40	1	-	Result code for the last SQL command
Data from the tool table, 50	1	Tool no.	Tool length
	2	Tool no.	Tool radius
	3	Tool no.	Tool radius R2
	4	Tool no.	Oversize for tool length DL
	5	Tool no.	Tool radius oversize DR
	6	Tool no.	Tool radius oversize DR2
	7	Tool no.	Tool locked (0 or 1)
	8	Tool no.	Number of the replacement tool

Group name, ID no.	Number	Index	Meaning
	9	Tool no.	Maximum tool age TIME1
	10	Tool no.	Maximum tool age TIME2
	11	Tool no.	Current tool age CUR. TIME
	12	Tool no.	PLC status
	13	Tool no.	Maximum tooth length LCUTS
	14	Tool no.	Maximum plunge angle ANGLE
	15	Tool no.	TT: Number of tool teeth CUT
	16	Tool no.	TT: Wear tolerance for length LTOL
	17	Tool no.	TT: Wear tolerance for radius RTOL
	18	Tool no.	TT: Rotational direction DIRECT (0=positive/–1=negative)
	19	Tool no.	TT: Offset in plane R-OFFS
	20	Tool no.	TT: Offset in length L-OFFS
	21	Tool no.	TT: Break tolerance for length LBREAK
	22	Tool no.	TT: Break tolerance for radius RBREAK
	28	Tool no.	Maximum rpm NMAX
	32	Tool no.	Point angle TANGLE
	34	Tool no.	LIFTOFF allowed (0= No, 1= Yes)
	35	Tool no.	Wear tolerance for radius R2TOL
	37	Tool no.	Corresponding line in the touch-probe table
	38	Tool no.	Timestamp of last use
Pocket table data, 51	1	Pocket number	Tool number
	2	Pocket number	Special tool: 0=No, 1=Yes
	3	Pocket number	Fixed pocket: 0=No, 1=Yes
	4	Pocket number	Locked pocket: 0=No, 1=Yes
	5	Pocket number	PLC status
Pocket number of a tool in the tool-pocket table, 52	1	Tool no.	Pocket number
	2	Tool no.	Tool magazine number

Group name, ID no.	Number	Index	Meaning
Values programmed immediately after TOOL CALL, 60	1	-	Tool number T
	2	-	Active tool axis 0 = X 6 = U 1 = Y 7 = V 2 = Z 8 = W
	3	-	Spindle speed S
	4	-	Oversize for tool length DL
	5	-	Tool radius oversize DR
	6	-	Automatic TOOL CALL 0 = Yes, 1 = No
	7	-	Tool radius oversize DR2
	8	-	Tool index
	9	-	Active feed rate
Values programmed immediately after TOOL DEF, 61	1	-	Tool number T
	2	-	Length
	3	-	Radius
	4	-	Index
	5	-	Tool data programmed in TOOL DEF 1 = Yes, 0 = No
Active tool compensation, 200	1	1 = without oversize 2 = with oversize 3 = with oversize and Oversize from TOOL CALL	Active radius
	2	1 = without oversize 2 = with oversize 3 = with oversize and Oversize from TOOL CALL	Active length
	3	1 = without oversize 2 = with oversize 3 = with oversize and Oversize from TOOL CALL	Rounding radius R2

Group name, ID no.	Number	Index	Meaning
Active transformations, 210	1	-	Basic rotation in MANUAL OPERATION mode
	2	-	Programmed rotation with Cycle 10
	3	-	Active mirrored axis
			0: Mirroring not active
			+1: X axis mirrored
			+2: Y axis mirrored
			+4: Z axis mirrored
			+64: U axis mirrored
			+128: V axis mirrored
			+256: W axis mirrored
			Combinations = Sum of individual axes
	4	1	Active scaling factor in X axis
	4	2	Active scaling factor in Y axis
	4	3	Active scaling factor in Z axis
	4	7	Active scaling factor in U axis
	4	8	Active scaling factor in V axis
	4	9	Active scaling factor in W axis
	5	1	3-D ROT A axis
	5	2	3-D ROT B axis
	5	3	3-D ROT C axis
	6	-	Tilted working plane active / inactive (–1/0) in a Program Run operating mode
	7	-	Tilted working plane active / inactive (–1/0) in a Manual operating mode
Active datum shift, 220	2	1	X axis
		2	Y axis
		3	Z axis
		4	A axis
		5	B axis
		6	C axis
		7	U axis
		8	V axis
		9	W axis

Group name, ID no.	Number	Index	Meaning
Traverse range, 230	2	1 to 9	Negative software limit switch in axes 1 to 9
	3	1 to 9	Positive software limit switch in axes 1 to 9
	5	-	Software limit switch on or off: 0 = on, 1 = off
Nominal position in the REF system, 240	1	1	X axis
		2	Y axis
		3	Z axis
		4	A axis
		5	B axis
		6	C axis
		7	U axis
		8	V axis
		9	W axis
Current position in the active coordinate system, 270	1	1	X axis
		2	Y axis
		3	Z axis
		4	A axis
		5	B axis
		6	C axis
		7	U axis
		8	V axis
		9	W axis

Group name, ID no.	Number	Index	Meaning
TS triggering touch probe, 350	50	1	Touch probe type
		2	Line in the touch-probe table
	51	-	Effective length
	52	1	Effective ball radius
		2	Rounding radius
	53	1	Center offset (reference axis)
		2	Center offset (minor axis)
	54	-	Spindle-orientation angle in degrees (center offset)
	55	1	Rapid traverse
		2	Measuring feed rate
	56	1	Maximum measuring range
		2	Safety clearance
	57	1	Spindle orientation possible: 0=No, 1=Yes
		2	Spindle-orientation angle
TT tool touch probe	70	1	Touch probe type
		2	Line in the touch-probe table
	71	1	Center point in reference axis (REF system)
		2	Center point in minor axis (REF system)
		3	Center point in tool axis (REF system)
	72	-	Probe contact radius
	75	1	Rapid traverse
		2	Measuring feed rate for stationary spindle
		3	Measuring feed rate for rotating spindle
	76	1	Maximum measuring range
		2	Safety clearance for linear measurement
		3	Safety clearance for radial measurement
	77	-	Spindle speed
	78	-	Probing direction

Group name, ID no.	Number	Index	Meaning
Reference point from touch probe cycle, 360	1	1 to 9 (X, Y, Z, A, B, C, U, V, W)	Last reference point of a manual touch probe cycle, or last touch point from Cycle 0 without probe length compensation but with probe radius compensation (workpiece coordinate system)
	2	1 to 9 (X, Y, Z, A, B, C, U, V, W)	Last reference point of a manual touch probe cycle, or last touch point from Cycle 0 without probe length or probe radius compensation (machine coordinate system)
	3	1 to 9 (X, Y, Z, A, B, C, U, V, W)	Result of measurement of the touch probe cycles 0 and 1 without probe radius or probe length compensation
	4	1 to 9 (X, Y, Z, A, B, C, U, V, W)	Last reference point of a manual touch probe cycle, or last touch point from Cycle 0 without probe length or stylus probe compensation (workpiece coordinate system)
	10	-	Oriented spindle stop
Value from the active datum table in the active coordinate system, 500	Line	Column	Read values
Basic transformation, 507	Line	1 to 6 (X, Y, Z, SPA, SPB, SPC)	Read the basic transformation of a preset
Axis offset, 508	Line	1 to 9 (X_OFFS, Y_OFFS, Z_OFFS, A_OFFS, B_OFFS, C_OFFS, U_OFFS, V_OFFS, W_OFFS)	Read the axis offset of a preset
Active preset, 530	1	-	Read the number of the active preset
Read data of the current tool, 950	1	-	Tool length L
	2	-	Tool radius R
	3	-	Tool radius R2
	4	-	Oversize for tool length DL
	5	-	Tool radius oversize DR
	6	-	Tool radius oversize DR2
	7	-	Tool locked TL 0 = not locked, 1 = locked
	8	-	Number of the replacement tool RT
	9	-	Maximum tool age TIME1
	10	-	Maximum tool age TIME2
	11	-	Current tool age CUR. TIME
	12	-	PLC status

Group name, ID no.	Number	Index	Meaning
	13	-	Maximum tooth length LCUTS
	14	-	Maximum plunge angle ANGLE
	15	-	TT: Number of tool teeth CUT
	16	-	TT: Wear tolerance for length LTOL
	17	-	TT: Wear tolerance for radius RTOL
	18	-	TT: Direction of rotation DIRECT 0 = positive, –1 = negative
	19	-	TT: Offset in plane R-OFFS
	20	-	TT: Offset in length L-OFFS
	21	-	TT: Break tolerance for length LBREAK
	22	-	TT: Break tolerance for radius RBREAK
	23	-	PLC value
	24	-	Tool type TYP 0 = milling cutter, 21 = touch probe
	27	-	Corresponding line in the touch-probe table
	32	-	Point angle
	34	-	Lift off
Touch probe cycles, 990	1	-	Approach behaviour: 0 = standard behavior 1 = effective radius, safety clearance zero
	2	-	0 = Pushbutton monitoring off 1 = Pushbutton monitoring on
	4	-	0 = Stylus not deflected 1 = Stylus deflected
Execution status, 992	10	-	Mid-program startup active 1 = yes, 0 = no
	11	-	Search phase
	14	-	Number of the last FN14 error
	16	-	Real execution active 1 = execution , 2 = simulation

Example: Assign the value of the active scaling factor for the Z axis to Q25.

```
55 FN 18: SYSREAD Q25 = ID210 NR4 IDX3
```

FN 19: PLC: Transfer values to PLC

The **FN 19: PLC** function transfers up to two numerical values or Q parameters to the PLC.

Increments and units: 0.1 µm or 0.0001°

Example: Transfer the numerical value 10 (which means 1 µm or 0.001°) to the PLC

```
56 FN 19: PLC=+10/+Q3
```

FN 20: WAIT FOR: NC and PLC synchronization

This function may only be used with the permission of your machine tool builder.

With the **FN 20: WAIT FOR** function you can synchronize the NC and PLC during a program run. The NC stops machining until the condition that you have programmed in the FN 20: WAIT FOR-block is fulfilled. The TNC can check the following PLC operands:

PLC operand	Abbreviation	Address range
Markers	**M**	0 to 4999
Input	**I**	0 to 31, 128 to 152 64 to 126 (first PL 401 B) 192 to 254 (second PL 401 B)
Output	**O**	0 to 30 32 to 62 (first PL 401 B) 64 to 94 (second PL 401 B)
Counter	**C**	48 to 79
Timer	**T**	0 to 95
Byte	**B**	0 to 4095
Word	**W**	0 to 2047
Double word	**D**	2048 to 4095

The TNC 320 uses an extended interface for communication between the PLC and NC. This is a new, symbolic Application Programmer Interface (**API**). The familiar previous PLC-NC interface is also available and can be used if desired. The machine tool builder decides whether the new or old TNC API is used. Enter the name of the symbolic operand as string to wait for the defined condition of the symbolic operand.

The following conditions are permitted in the FN 20 block:

Condition	Abbreviation
Equal to	**==**
Less than	**<**
Greater than	**>**
Less than or equal	**<=**
Greater than or equal	**>=**

In addition, the **FN20: WAIT FOR SYNC** function is available. **WAIT FOR SYNC** is used whenever you read, for example, system data via **FN18** that require synchronization with real time. The TNC stops the look-ahead calculation and executes the subsequent NC block only when the NC program has actually reached that block.

Example: Stop program run until the PLC sets marker 4095 to 1

```
32 FN 20: WAIT FOR M4095==1
```

Example: Stop program run until the PLC sets the symbolic operand to 1

```
32 FN 20: APISPIN[0].NN_SPICONTROLINPOS==1
```

Example: Pause internal look-ahead calculation, read current position in the X axis

```
32 FN 20: WAIT FOR SYNC
33 FN 18: SYSREAD Q1 = ID270 NR1 IDX1
```

FN 29: PLC: Transfer values to the PLC

The FN 29: PLC function transfers up to eight numerical values or Q parameters to the PLC.

Increments and units: 0.1 µm or 0.0001°

Example: Transfer the numerical value 10 (which means 1 µm or 0.001°) to the PLC

```
56 FN 29: PLC=+10/+Q3/+Q8/+7/+1/+Q5/+Q2/+15
```

FN 37: EXPORT

You need the FN 37: EXPORT function if you want to create your own cycles and integrate them in the TNC. The Q parameters 0 to 99 are effective only locally. This means that the Q parameters are effective only in the program in which they were defined. With the FN 37: EXPORT function you can export locally effective Q parameters into another (calling) program.

> The TNC exports the value that the parameter has at the time of the EXPORT command.
>
> The parameter is exported only to the presently calling program.

Example: The local Q parameter Q25 is exported

```
56 FN37: EXPORT Q25
```

Example: The local Q parameters Q25 to Q30 are exported

```
56 FN37: EXPORT Q25 - Q30
```

8.9 Accessing tables with SQL commands

Introduction

Accessing of tables is programmed on the TNC with SQL commands in **transactions**. A transaction consists of multiple SQL commands that guarantee an orderly execution of the table entries.

Tables are configured by the machine manufacturer. Names and designations required as parameters for SQL commands are also specified.

The following **terms** are used:

- **Table**: A table consists of x columns and y rows. It is saved as a file in the File Manager of the TNC, and is addressed with the path and file name (=table name). Synonyms can also be used for addressing, as an alternative to the path and file name.
- **Columns**: The number and names of the columns are specified when configuring the table. In some SQL commands the column name is used for addressing.
- **Rows**: The number of rows is variable. You can insert new rows. There are no row numbers or other designators. However, you can select rows based on the contents of a column. Rows can only be deleted in the table editor, not by an NC program.
- **Cell**: The part of a column in a row.
- **Table entry**: Content of a cell.
- **Result set**: During a transaction, the selected columns and rows are managed in the result set. You can view the result set as a sort of "intermediate memory," which temporarily assumes the set of selected columns and rows. Result set
- **Synonym**: This term defines a name used for a table instead of its path and file name. Synonyms are specified by the machine manufacturer in the configuration data.

A transaction

In principle, a transaction consists of the following actions:

- Address the table (file), select rows and transfer them to the result set.
- Read rows from the result set, change rows or insert new rows.
- Conclude transaction: If changes/insertions were made, the rows from the result set are placed in the table (file).

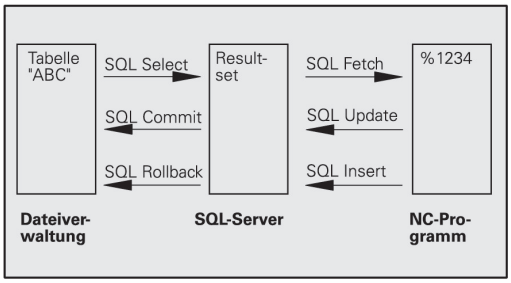

Other actions are also necessary so that table entries can be edited in an NC program and to ensure that other changes are not made to copies of the same table rows at the same time. This results in the following **transaction sequence**:

1 A Q parameter is specified for each column to be edited. The Q parameter is assigned to a column—it is "bound" (**SQL BIND...**
2 Address the table (file), select rows and transfer them to the result set. In addition, you define which columns are transferred to the result set (**SQL SELECT...**). You can lock the selected rows. Other processes can then read these rows, but cannot change the table entries. You should always lock the selected rows when you are going to make changes (**SQL SELECT ... FOR UPDATE**).
3 Read rows from the result set, modify and/or add new rows: – Adopt one row of the result set into the Q parameters of your NC program (**SQL FETCH...**) – Prepare changes in the Q parameters and transfer to a row in the result set (**SQL UPDATE...**) – Prepare new table row in the Q parameters and transfer as a new row to the result set (**SQL INSERT...**)
4 Conclude transaction: – If changes/insertions were made, the data from the result set is placed in the table (file). The data is now saved in the file. Any locks are canceled, and the result set is released (**SQL COMMIT...**). – If table entries were **not** changed or inserted (only read access), any locks are canceled and the result set is released (**SQL ROLLBACK... WITHOUT INDEX**).

Multiple transactions can be edited at the same time.

> ⇨ You must conclude a transaction, even if it consists solely of read accesses. Only this guarantees that changes/insertions are not lost, that locks are canceled, and that result sets are released.

Result set

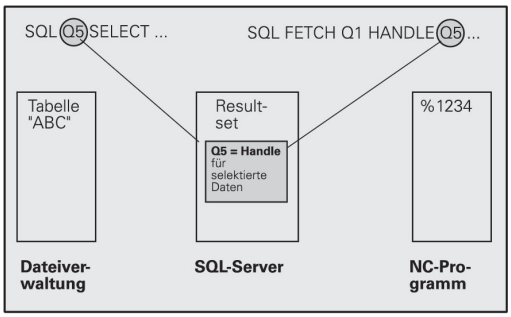

The selected rows are numbered in ascending order within the result set, starting from 0. This numbering is referred to as the **index.** The index is used for read- and write-accesses, enabling a row of the result set to be specifically addressed.

It can often be advantageous to sort the rows in the result set. Do this by specifying the table column containing the sorting criteria. Also select ascending or descending order (**SQL SELECT ... ORDER BY ...**).

The selected rows that were transferred to the result set are addressed with the **HANDLE**. All following SQL commands use the handle to refer to this "set of selected columns and rows."

When concluding a transaction, the handle is released (**SQL COMMIT...** or **SQL ROLLBACK...**). It is then no longer valid.

You can edit more than one result set at the same time. The SQL server assigns a new handle for each "Select" command.

"Binding" Q parameters to columns

The NC program does not have direct access to the table entries in the result set. The data must be transferred in Q parameters. In the other direction, the data is first prepared in the Q parameters and then transferred to the result set.

Specify with **SQL BIND ...** which table columns are mapped to which Q parameters. The Q parameters are "bound" (assigned) to the columns. Columns that are not bound to Q parameters are not included in the read-/write-processes.

If a new table row is generated with **SQL INSERT...,** the columns not bound to Q parameters are filled with default values.

Programming SQL commands

This function can only be programmed if you have entered the code number 555343.

Program SQL commands in the Programming mode:

SQL

- Call the SQL functions by pressing the SQL soft key
- Select an SQL command via soft key (see overview) or press the **SQL EXECUTE** soft key and program the SQL command

Overview of the soft keys

Function	Soft key
SQL EXECUTE Program a Select command.	SQL EXECUTE
SQL BIND Bind a Q parameter to a table column.	SQL BIND
SQL FETCH Read table rows from the result set and save them in Q parameters.	SQL FETCH
SQL UPDATE Save data from the Q parameters in an existing table row in the result set.	SQL UPDATE
SQL INSERT Save data from the Q parameters in a new table row in the result set.	SQL INSERT
SQL COMMIT Transfer table rows from the result set into the table and conclude the transaction.	SQL COMMIT
SQL ROLLBACK ■ If **INDEX** is not programmed: Discard any changes/insertions and conclude the transaction. ■ If **INDEX** is programmed: The indexed row remains in the result set. All other rows are deleted from the result set. The transaction is **not** concluded.	SQL ROLLBACK

SQL BIND

SQL BIND binds a Q parameter to a table column. The SQL commands "Fetch," "Update" and "Insert" evaluate this binding (assignment) during data transfer between the result set and the NC program.

An **SQL BIND** command without a table or column name cancels the binding. Binding remains effective at most until the end of the NC program or subprogram.

- You can program any number of bindings. Read and write processes only take into account the columns that were entered in the "Select" command.
- **SQL BIND...** must be programmed **before** "Fetch," "Update" or "Insert" commands are programmed. You can program a "Select" command without a preceding "Bind" command.
- If in the "Select" command you include columns for which no binding is programmed, an error occurs during read/write processes (program interrupt).

SQL BIND

- **Parameter no. for result**: Q parameter that is bound (assigned) to the table column.
- **Database: Column name**: Enter the table name and column name separated by a **.** (period)
  Table name: Synonym or path and file name of this table. The synonym is entered directly, whereas the path and file name are entered in single quotation marks
  Column designation: Designation of the table column as given in the configuration data

Bind a Q parameter to a table column

```
11SQL BIND Q881
"TAB_EXAMPLE.MEAS_NO"
12SQL BIND Q882
"TAB_EXAMPLE.MEAS_X"
13SQL BIND Q883
"TAB_EXAMPLE.MEAS_Y"
14SQL BIND Q884
"TAB_EXAMPLE.MEAS_Z"
```

Cancel binding

```
91 SQL BIND Q881
92 SQL BIND Q882
93 SQL BIND Q883
94 SQL BIND Q884
```

SQL SELECT

SQL SELECT selects table rows and transfers them to the result set.

The SQL server places the data in the result set row-by-row. The rows are numbered in ascending order, starting from 0. This row number, called the **INDEX,** is used in the SQL commands "Fetch" and "Update."

Enter the selection criteria in the **SQL SELECT...WHERE...** function. This lets you restrict the number of rows to be transferred. If you do not use this option, all rows in the table are loaded.

Enter the sorting criteria in the **SQL SELECT...ORDER BY...** function. Enter the column designation and the keyword for ascending/descending order. If you do not use this option, the rows are placed in random order.

Lock out the selected rows for other applications with the **SQL SELECT...FOR UPDATE** function. Other applications can continue to read these rows, but cannot change them. We strongly recommend using this option if you are making changes to the table entries.

Empty result set: If no rows match the selection criteria, the SQL server returns a valid handle but no table entries.

SQL EXECUTE

- **Parameter no. for result**: Q parameter for the handle. The SQL server returns the handle for the group of columns and rows selected with the current "Select" command.
  With an error (selection could not be executed) the SQL server returns a 1. Code 0 identifies an invalid handle.
- **Database: SQL command text**: with the following elements:
  - **SELECT** (keyword):
    Name of the SQL command, names of the table columns to be transferred. Separate column names with a **,** (comma) (see examples). Q parameters must be bound to all columns entered here.
  - **FROM** table name:
    Synonym or path and file name of this table. The synonym is entered directly: the path name and table name are entered in single quotation marks (see examples of the SQL command); names of the table columns to be transferred—separate several columns by a comma (see examples). Q parameters must be bound to all columns entered here.

Select all table rows

```
11SQL BIND Q881
"TAB_EXAMPLE.MEAS_NO"
12SQL BIND Q882
"TAB_EXAMPLE.MEAS_X"
13SQL BIND Q883
"TAB_EXAMPLE.MEAS_Y"
14SQL BIND Q884
"TAB_EXAMPLE.MEAS_Z"
. . .
20SQL Q5 "SELECT
MEAS_NO,MEAS_X,MEAS_Y, MEAS_Z
FROM TAB_EXAMPLE"
```

Selection of table rows with the WHERE function

```
. . .
20SQL Q5 "SELECT
MEAS_NO,MEAS_X,MEAS_Y, MEAS_Z
FROM TAB_EXAMPLE WHERE
MEAS_NO<20"
```

Selection of table rows with the WHERE function and Q parameters

```
. . .
20SQL Q5 "SELECT
MEAS_NO,MEAS_X,MEAS_Y, MEAS_Z
FROM TAB_EXAMPLE WHERE
MEAS_NO==:'Q11'"
```

Table name defined with path and file name

```
. . .
20SQL Q5 "SELECT
MEAS_NO,MEAS_X,MEAS_Y, MEAS_Z
FROM 'V:\TABLE\TAB_EXAMPLE' WHERE
MEAS_NO<20"
```

- Optional:
  WHERE selection criteria: A selection criterion consists of a column name, condition (see table) and comparator. Link selection criteria with logical AND or OR. Program the comparator directly or with a Q parameter. A Q parameter is introduced with a colon and placed in single quotation marks (see example).
- Optional:
  ORDER BY column name **ASC** for ascending sorting, or **ORDER BY** column name **DESC** for descending sorting. If you program neither ASC nor DESC, ascending sorting is executed by default. The TNC places the selected rows in the indicated column.
- Optional:
  FOR UPDATE (keyword): The selected rows are locked against write-accesses from other processes.

Condition	**Programming**
Equal to	= ==
Not equal to	!= <>
Less than	<
Less than or equal to	<=
Greater than	>
Greater than or equal to	>=
Linking multiple conditions:	
Logical AND	AND
Logical OR	OR

SQL FETCH

SQL FETCH reads the row addressed with **INDEX** from the result set, and places the table entries in the bound (assigned) Q parameters. The result set is addressed with the **HANDLE**.

SQL FETCH takes into account all columns entered in the "Select" command.

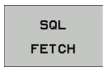

- **Parameter no. for result:** Q parameter in which the SQL server reports the result:
  0: no error
  1: error occurred (erroneous handle or index too large)
- **Database: SQL access ID**: Q parameter with the **handle** for identifying the result set (also see **SQL SELECT**)
- **Database: Index for SQL result**: Row number within the result set. The table entries of this row are read and are transferred into the bound Q parameters. If you do not enter an index, the first row is read (n=0).
  Either enter the row number directly or program the Q parameter containing the index.

Row number is transferred in a Q parameter

```
11SQL BIND Q881
"TAB_EXAMPLE.MEAS_NO"
12SQL BIND Q882
"TAB_EXAMPLE.MEAS_X"
13SQL BIND Q883
"TAB_EXAMPLE.MEAS_Y"
14SQL BIND Q884
"TAB_EXAMPLE.MEAS_Z"
. . .
20SQL Q5 "SELECT
MEAS_NO,MEAS_X,MEAS_Y, MEAS_Z
FROM TAB_EXAMPLE"
. . .
30 SQL FETCH Q1HANDLE Q5 INDEX
+Q2
```

Row number is programmed directly

```
. . .
30 SQL FETCH Q1HANDLE Q5 INDEX5
```

SQL UPDATE

SQL UPDATE transfers the data prepared in the Q parameters into the row of the result set addressed with **INDEX.** The existing row in the result set is completely overwritten.

SQL UPDATE takes into account all columns entered in the "Select" command.

SQL UPDATE

- **Parameter no. for result:** Q parameter in which the SQL server reports the result:
  0: no error
  1: error occurred (erroneous handle, index too large, value range exceeded/fallen below or erroneous data format)
- **Database: SQL access ID**: Q parameter with the **handle** for identifying the result set (also see **SQL SELECT**)
- **Database: Index for SQL result**: Row number within the result set. The table entries prepared in the Q parameters are written to this row. If you do not enter an index, the first row is written to (n=0). Either enter the row number directly or program the Q parameter containing the index.

Row number is programmed directly

```
. . .
40 SQL UPDATEQ1 HANDLE Q5 INDEX5
```

SQL INSERT

SQL INSERT generates a new row in the result set and transfers the data prepared in the Q parameters into the new row.

SQL INSERT takes into account all columns entered in the "Select" command. Table columns not entered in the "Select" command are filled with default values.

SQL INSERT

- **Parameter no. for result:** Q parameter in which the SQL server reports the result:
  0: no error
  1: error occurred (erroneous handle, value range exceeded/fallen below or erroneous data format)
- **Database: SQL access ID**: Q parameter with the **handle** for identifying the result set (also see **SQL SELECT**)

Row number is transferred in a Q parameter

```
11SQL BIND Q881
"TAB_EXAMPLE.MEAS_NO"
12SQL BIND Q882
"TAB_EXAMPLE.MEAS_X"
13SQL BIND Q883
"TAB_EXAMPLE.MEAS_Y"
14SQL BIND Q884
"TAB_EXAMPLE.MEAS_Z"
. . .
20SQL Q5 "SELECT
MEAS_NO,MEAS_X,MEAS_Y, MEAS_Z
FROM TAB_EXAMPLE"
. . .
40 SQL INSERTQ1 HANDLE Q5
```

SQL COMMIT

SQL COMMIT transfers all rows in the result set back to the table. A lock set with **SELECT...FOR UPDATE** is canceled.

The handle given in the **SQL SELECT** command loses its validity.

SQL COMMIT

- **Parameter no. for result:** Q parameter in which the SQL server reports the result:
  0: no error
  1: error occurred (erroneous handle or identical entries in columns in which unique entries are required)
- **Database: SQL access ID**: Q parameter with the **handle** for identifying the result set (also see **SQL SELECT**)

```
11SQL BIND Q881
"TAB_EXAMPLE.MEAS_NO"
12SQL BIND Q882
"TAB_EXAMPLE.MEAS_X"
13SQL BIND Q883
"TAB_EXAMPLE.MEAS_Y"
14SQL BIND Q884
"TAB_EXAMPLE.MEAS_Z"
. . .
20SQL Q5 "SELECT
MEAS_NO,MEAS_X,MEAS_Y, MEAS_Z
FROM TAB_EXAMPLE"
. . .
30 SQL FETCH Q1HANDLE Q5 INDEX
+Q2
. . .
40 SQL UPDATEQ1 HANDLE Q5 INDEX
+Q2
. . .
50 SQL COMMITQ1 HANDLE Q5
```

SQL ROLLBACK

How **SQL ROLLBACK** is executed depends on whether **INDEX** is programmed:

- If **INDEX** is not programmed: The result set is **not** written back to the table (any changes/insertions are discarded). The transaction is closed and the handle given in the **SQL SELECT** command loses its validity. Typical application: Ending a transaction solely containing read-accesses.
- If **INDEX** is programmed: The indexed row remains. All other rows are deleted from the result set. The transaction is **not** concluded. A lock set with **SELECT...FOR UPDATE** remains for the indexed row. For all other rows it is reset.

SQL ROLLBACK

- **Parameter no. for result:** Q parameter in which the SQL server reports the result:
  0: no error
  1: error occurred (erroneous handle)
- **Database: SQL access ID**: Q parameter with the **handle** for identifying the result set (also see **SQL SELECT**)
- **Database: Index for SQL result**: Row that is to remain in the result set. Either enter the row number directly or program the Q parameter containing the index

```
11SQL BIND Q881
"TAB_EXAMPLE.MEAS_NO"
12SQL BIND Q882
"TAB_EXAMPLE.MEAS_X"
13SQL BIND Q883
"TAB_EXAMPLE.MEAS_Y"
14SQL BIND Q884
"TAB_EXAMPLE.MEAS_Z"
. . .
20SQL Q5 "SELECT
MEAS_NO,MEAS_X,MEAS_Y, MEAS_Z
FROM TAB_EXAMPLE"
. . .
30 SQL FETCH Q1HANDLE Q5 INDEX
+Q2
. . .
50 SQL ROLLBACKQ1 HANDLE Q5
```

8.10 Entering formulas directly

Entering formulas

You can enter mathematical formulas that include several operations directly into the part program by soft key.

Press the FORMULA soft key to call the mathematical functions. The TNC displays the following soft keys in several soft-key rows:

Mathematical function	Soft key
Addition e.g. **Q10 = Q1 + Q5**	+
Subtraction e.g. **Q25 = Q7 - Q108**	-
Multiplication e.g. **Q12 = 5 * Q5**	*
Division e.g. **Q25 = Q1 / Q2**	/
Open parentheses e.g. **Q12 = Q1 * (Q2 + Q3)**	(
Close parentheses e.g. **Q12 = Q1 * (Q2 + Q3)**	)
Square value e.g. **Q15 = SQ 5**	SQ
Square root e.g. **Q22 = SQRT 25**	SQRT
Sine of an angle e.g. **Q44 = SIN 45**	SIN
Cosine of an angle e.g. **Q45 = COS 45**	COS
Tangent of an angle e.g. **Q46 = TAN 45**	TAN
Arc sine Inverse function of the sine; determine the angle from the ratio of the opposite side to the hypotenuse e.g. **Q10 = ASIN 0.75**	ASIN
Arc cosine Inverse function of the cosine; determine the angle from the ratio of the adjacent side to the hypotenuse e.g. **Q11 = ACOS Q40**	ACOS
Arc tangent Inverse function of the tangent; determine the angle from the ratio of the opposite side to the adjacent side e.g. **Q12 = ATAN Q50**	ATAN

Mathematical function	Soft key
Powers e.g. **Q15 = 3^3**	^
Constant "pi" (3,14159) e.g. **Q15 = PI**	PI
Natural logarithm (LN) of a number Base 2.7183 e.g. **Q15 = LN Q11**	LN
Logarithm of a number, base 10 e.g. **Q33 = LOG Q22**	LOG
Exponential function, 2.7183n e.g. **Q1 = EXP Q12**	EXP
Negate (multiplication by -1) e.g. **Q2 = NEG Q1**	NEG
Truncate digits after the decimal point Form an integer e.g. **Q3 = INT Q42**	INT
Absolute value e.g. **Q4 = ABS Q22**	ABS
Truncate digits before the decimal point Form a fraction e.g. **Q5 = FRAC Q23**	FRAC
Check the algebraic sign of a digit e.g. **Q12 = SGN Q50** When return value Q12 = 1, then Q50 >= 0 When return value Q12 = -1, then Q50 < 0	SGN
Calculate modulo value (division rest) e.g. **Q12 = 400 % 360** Result: Q12 = 40	%

Rules for formulas

Mathematical formulas are programmed according to the following rules:

Higher-level operations are performed first

```
12 Q1 = 5 * 3 + 2 * 10 = 35
```

1 Calculation 5 * 3 = 15
2 Calculation 2 * 10 = 20
3 Calculation 15 + 20 = 35

or

```
13 Q2 = SQ 10 - 3^3 = 73
```

1 Calculation step 10 squared = 100
2 Calculation step 3 to the third power = 27
3 Calculation 100 – 27 = 73

Distributive law

Law of distribution with parentheses calculation
a * (b + c) = a * b + a * c

Programming example

Calculate an angle with the arc tangent from the opposite side (Q12) and adjacent side (Q13); then store in Q25.

Q
FORMULA

- To select the formula entering function, press the Q key and the FORMULA soft key, or use the shortcut:

Q

- Press the Q key on the ASCII keyboard

PARAMETER NUMBER FOR RESULT?

ENT

- Enter parameter number **25** and press the ENT key.

▷
ATAN

- Shift the soft-key row and select the arc tangent function

◁
(

- Shift the soft-key row and open the parentheses

Q

- Enter Q parameter number **12**

/

- Select division

Q

- Enter Q parameter number **13**

)
END

- Close parentheses and conclude formula entry

Example NC block

```
37 Q25 = ATAN (Q12/Q13)
```

8.11 String parameters

String processing functions

You can use the **QS** parameters to create variable character strings. You can output such character strings for example through the **FN 16:F-PRINT** function to create variable logs.

You can assign a linear sequence of characters (letters, numbers, special characters and spaces) up to a length of 256 characters to a string parameter. You can also check and process the assigned or imported values by using the functions described below. As in Q-parameter programming, you can use a total of 2000 QS parameters (See "Principle and overview of functions", page 236).

The STRING FORMULA and FORMULA Q-parameter functions contain various functions for processing the string parameters.

STRING FORMULA functions	Soft key	Page
Assigning string parameters	STRING	284
Chain-linking string parameters		284
Converting a numerical value to a string parameter	TOCHAR	285
Copy a substring from a string parameter	SUBSTR	286

FORMULA string functions	Soft key	Page
Converting a string parameter to a numerical value	TONUMB	287
Checking a string parameter	INSTR	288
Finding the length of a string parameter	STRLEN	289
Compare alphabetic priority	STRCOMP	290

When you use a STRING FORMULA, the result of the arithmetic operation is always a string. When you use the FORMULA function, the result of the arithmetic operation is always a numeric value.

Assigning string parameters

You have to assign a string variable before you use it. Use the **DECLARE STRING** command to do so.

SPEC FCT
- Show the soft-key row with special functions

PROGRAM FUNCTIONS
- Select the menu for defining various plain-language functions

STRING FUNCTIONS
- Select string functions

DECLARE STRING
- Select the **DECLARE STRING** function

Example NC block

```
37 DECLARE STRING QS10 = "WORKPIECE"
```

Chain-linking string parameters

With the concatenation operator (string parameter **||** string parameter) you can make a chain of two or more string parameters.

SPEC FCT
- Show the soft-key row with special functions

PROGRAM FUNCTIONS
- Select the menu for defining various plain-language functions

STRING FUNCTIONS
- Select string functions

STRING FORMULA
- Select the STRING FORMULA function
- Enter the number of the string parameter in which the TNC is to save the concatenated string. Confirm with the ENT key
- Enter the number of the string parameter in which the **first** substring is saved. Confirm with the ENT key: The TNC displays the concatenation symbol **||**
- Confirm your entry with the ENT key
- Enter the number of the string parameter in which the **second** substring is saved. Confirm with the ENT key
- Repeat the process until you have selected all the required substrings. Conclude with the END key

Example: QS10 is to include the complete text of QS12, QS13 and QS14

```
37 QS10 = QS12 || QS13 || QS14
```

Parameter contents:

- **QS12**: **Workpiece**
- **QS13**: **Status:**
- **QS14**: **Scrap**
- **QS10**: **Workpiece Status: Scrap**

Converting a numerical value to a string parameter

With the **TOCHAR** function, the TNC converts a numerical value to a string parameter. This enables you to chain numerical values with string variables.

SPEC FCT
- ▶ Show the soft-key row with special functions

PROGRAM FUNCTIONS
- ▶ Select the menu for defining various plain-language functions

STRING FUNCTIONS
- ▶ Select string functions

STRING FORMULA
- ▶ Select the STRING FORMULA function

TOCHAR
- ▶ Select the function for converting a numerical value to a string parameter
- ▶ Enter the number or the desired Q parameter to be converted, and confirm with the ENT key
- ▶ If desired, enter the number of decimal places that the TNC should convert, and confirm with the ENT key
- ▶ Close the parenthetical expression with the ENT key and confirm your entry with the END key

Example: Convert parameter Q50 to string parameter QS11, use 3 decimal places

```
37 QS11 = TOCHAR ( DAT+Q50 DECIMALS3 )
```

Copying a substring from a string parameter

The **SUBSTR** function copies a definable range from a string parameter.

SPEC FCT
- Show the soft-key row with special functions

PROGRAM FUNCTIONS
- Select the menu for defining various plain-language functions

STRING FUNCTIONS
- Select string functions

STRING FORMULA
- Select the STRING FORMULA function
- Enter the number of the string parameter in which the TNC is to save the copied string. Confirm with the ENT key

SUBSTR
- Select the function for cutting out a substring
- Enter the number of the QS parameter from which the substring is to be copied. Confirm with the ENT key
- Enter the number of the place starting from which to copy the substring, and confirm with the ENT key
- Enter the number of characters to be copied, and confirm with the ENT key
- Close the parenthetical expression with the ENT key and confirm your entry with the END key

Remember that the first character of a text sequence starts internally with the zeroth place.

Example: A four-character substring (LEN4) is read from the string parameter QS10 beginning with the third character (BEG2)

```
37 QS13 = SUBSTR ( SRC_QS10 BEG2 LEN4 )
```

Converting a string parameter to a numerical value

The **TONUMB** function converts a string parameter to a numerical value. The value to be converted should be only numerical.

> The QS parameter must contain only one numerical value. Otherwise the TNC will output an error message.

- Select Q-parameter functions

- Select the FORMULA function
- Enter the number of the parameter in which the TNC is to save the numerical value. Confirm with the ENT key

- Shift the soft-key row

- Select the function for converting a string parameter to a numerical value
- Enter the number of the Q parameter to be converted, and confirm with the ENT key
- Close the parenthetical expression with the ENT key and confirm your entry with the END key

Example: Convert string parameter QS11 to a numerical parameter Q82

```
37 Q82 = TONUMB ( SRC_QS11 )
```

Checking a string parameter

The **INSTR** function checks whether a string parameter is contained in another string parameter.

Q

- Select Q-parameter functions

FORMULA

- Select the FORMULA function
- Enter the number of the Q parameter in which the TNC is to save the place at which the search text begins. Confirm with the ENT key

◁

- Shift the soft-key row

INSTR

- Select the function for checking a string parameter
- Enter the number of the QS parameter in which the text to be searched for is saved. Confirm with the ENT key
- Enter the number of the QS parameter to be searched, and confirm with the ENT key
- Enter the number of the place starting from which the TNC is to search the substring, and confirm with the ENT key
- Close the parenthetical expression with the ENT key and confirm your entry with the END key

⇨

Remember that the first character of a text sequence starts internally with the zeroth place.

If the TNC cannot find the required substring, it will save the total length of the string to be searched (counting starts at 1) in the result parameter.

If the substring is found in more than one place, the TNC returns the first place at which it finds the substring.

Example: Search through QS10 for the text saved in parameter QS13. Begin the search at the third place.

```
37 Q50 = INSTR ( SRC_QS10 SEA_QS13 BEG2 )
```

Finding the length of a string parameter

The **STRLEN** function returns the length of the text saved in a selectable string parameter.

- Select Q-parameter functions

- Select the FORMULA function
- Enter the number of the Q parameter in which the TNC is to save the ascertained string length. Confirm with the ENT key

- Shift the soft-key row

- Select the function for finding the text length of a string parameter
- Enter the number of the QS parameter whose length the TNC is to ascertain, and confirm with the ENT key
- Close the parenthetical expression with the ENT key and confirm your entry with the END key

Example: Find the length of QS15

```
37 Q52 = STRLEN ( SRC_QS15 )
```

Comparing alphabetic sequence

The **STRCOMP** function compares string parameters for alphabetic priority.

- Select Q-parameter functions

- Select the FORMULA function
- Enter the number of the Q parameter in which the TNC is to save the result of comparison. Confirm with the ENT key

- Shift the soft-key row

- Select the function for comparing string parameters
- Enter the number of the first QS parameter to be compared, and confirm with the ENT key
- Enter the number of the second QS parameter to be compared, and confirm with the ENT key
- Close the parenthetical expression with the ENT key and confirm your entry with the END key

The TNC returns the following results:

- **0**: The compared QS parameters are identical
- **-1**: The first QS parameter **precedes** the second QS parameter alphabetically
- **+1:** The first QS parameter **follows** the second QS parameter alphabetically

Example: QS12 and QS14 are compared for alphabetic priority

```
37 Q52 = STRCOMP ( SRC_QS12 SEA_QS14 )
```

Reading machine parameters

Use the **CFGREAD** function to read out TNC machine parameters as numerical values or as strings.

In order to read out a machine parameter, you must use the TNC's configuration editor to determine the parameter name, parameter object, and, if they have been assigned, the group name and index

Type	Meaning	Example	Icon
Key	Group name of the machine parameter (if assigned)	CH_NC	
Entity	Parameter object (the name starts with "**Cfg**...")	CfgGeoCycle	
Attribute	Name of the machine parameter	displaySpindleErr	
Index	List index of a machine parameter (if assigned)	[0]	

If you are in the configuration editor for the user parameters, you can change the display of the existing parameters. In the default setting, the parameters are displayed with short, explanatory texts. To display the actual system names of the parameters, press the key for the screen layout and then the SHOW SYSTEM NAME soft key. Follow the same procedure to return to the standard display.

Each time you want to interrogate a machine parameter with the **CFGREAD** function, you must first define a QS parameter with attribute, entity and key.

The following parameters are read in the CFGREAD function's dialog:

- **KEY_QS**: Group name (key) of the machine parameter
- **TAG_QS**: Object name (entity) of the machine parameter
- **ATR_QS**: Name (attribute) of the machine parameter
- **IDX**: Index of the machine parameter

Reading a string of a machine parameter

In order to store the content of a machine parameter as a string in a QS parameter:

SPEC FCT
- Show the soft-key row with special functions

PROGRAM FUNCTIONS
- Select the menu for defining various plain-language functions

STRING FUNCTIONS
- Select string functions

STRING FORMULA
- Select the STRING FORMULA function
- Enter the number of the string parameter in which the TNC is to save the machine parameter. Confirm with the ENT key
- Select the CFGREAD function
- Enter the numbers of the string parameters for the key, entity and attribute, then confirm with the ENT key
- Enter the number for the index, or skip the dialog with NO ENT, whichever applies
- Close the parenthetical expression with the ENT key and confirm your entry with the END key

Example: Read as a string the axis designation of the fourth axis

Parameter settings in the configuration editor

DisplaySettings
CfgDisplayData
axisDisplayOrder
[0] to [5]

14 DECLARE STRINGQS11 = ""	Assign string parameter for key
15 DECLARE STRINGQS12 = "CFGDISPLAYDATA"	Assign string parameter for entity
16 DECLARE STRINGQS13 = "AXISDISPLAYORDER"	Assign string parameter for parameter name
17 QS1 = CFGREAD(KEY_QS11 TAG_QS12 ATR_QS13 IDX3)	Read out machine parameter

Reading a numerical value of a machine parameter

In order to store the value of a machine parameter as a numerical value in a Q parameter:

- Select Q-parameter functions

- Select the FORMULA function
- Enter the number of the Q parameter in which the TNC is to save the machine parameter. Confirm with the ENT key
- Select the CFGREAD function
- Enter the numbers of the string parameters for the key, entity and attribute, then confirm with the ENT key
- Enter the number for the index, or skip the dialog with NO ENT, whichever applies
- Close the parenthetical expression with the ENT key and confirm your entry with the END key

Example: Read overlap factor as Q parameter

Parameter settings in the configuration editor

ChannelSettings
CH_NC
CfgGeoCycle
pocketOverlap

14 DECLARE STRINGQS11 = "CH_NC"	Assign string parameter for key
15 DECLARE STRINGQS12 = "CFGGEOCYCLE"	Assign string parameter for entity
16 DECLARE STRINGQS13 = "POCKETOVERLAP"	Assign string parameter for parameter name
17 Q50 = CFGREAD(KEY_QS11 TAG_QS12 ATR_QS13)	Read out machine parameter

8.12 Preassigned Q parameters

The Q parameters Q100 to Q199 are assigned values by the TNC. The following types of information are assigned to Q parameters:

- Values from the PLC
- Tool and spindle data
- Data on operating status
- Results of measurements from touch probe cycles etc.

The TNC saves the values for the preassigned Q parameters Q108, Q114 and Q115 to Q117 in the unit of measure used by the active program.

> Do not use preassigned Q parameters (or QS parameters) between **Q100** and **Q199 (QS100** and **QS199)** as calculation parameters in NC programs. Otherwise you might receive undesired results.

Values from the PLC: Q100 to Q107

The TNC uses the parameters Q100 to Q107 to transfer values from the PLC to an NC program.

Active tool radius: Q108

The active value of the tool radius is assigned to Q108. Q108 is calculated from:

- Tool radius R (tool table or **TOOL DEF** block)
- Delta value DR from the tool table
- Delta value DR from the **TOOL CALL** block

> The TNC remembers the current tool radius even if the power is interrupted.

Tool axis: Q109

The value of Q109 depends on the current tool axis:

Tool axis	Parameter value
No tool axis defined	Q109 = –1
X axis	Q109 = 0
Y axis	Q109 = 1
Z axis	Q109 = 2
U axis	Q109 = 6
V axis	Q109 = 7
W axis	Q109 = 8

Spindle status: Q110

The value of the parameter Q110 depends on the M function last programmed for the spindle.

M function	Parameter value
No spindle status defined	Q110 = –1
M3: Spindle ON, clockwise	Q110 = 0
M4: Spindle ON, counterclockwise	Q110 = 1
M5 after M3	Q110 = 2
M5 after M4	Q110 = 3

Coolant on/off: Q111

M function	Parameter value
M8: Coolant ON	Q111 = 1
M9: Coolant OFF	Q111 = 0

Overlap factor: Q112

The overlap factor for pocket milling (pocketOverlap) is assigned to Q112.

Unit of measurement for dimensions in the program: Q113

During nesting with PGM CALL, the value of the parameter Q113 depends on the dimensional data of the program from which the other programs are called.

Dimensional data of the main program	Parameter value
Metric system (mm)	Q113 = 0
Inch system (inches)	Q113 = 1

Tool length: Q114

The current value for the tool length is assigned to Q114.

> **!** The TNC remembers the current tool length even if the power is interrupted.

Coordinates after probing during program run

The parameters Q115 to Q119 contain the coordinates of the spindle position at the moment of contact during programmed measurement with the 3-D touch probe. The coordinates refer to the datum point that is active in the Manual Operation mode.

The length of the stylus and the radius of the ball tip are not compensated in these coordinates.

Coordinate axis	Parameter value
X axis	Q115
Y axis	Q116
Z axis	Q117
4th Axis Machine-dependent	Q118
V. axis Machine-dependent	Q119

Deviation between actual value and nominal value during automatic tool measurement with the TT 130

Deviation of actual from nominal value	Parameter value
Tool length	Q115
Tool radius	Q116

Tilting the working plane with mathematical angles: rotary axis coordinates calculated by the TNC

Coordinates	Parameter value
A axis	Q120
B axis	Q121
C axis	Q122

Measurement results from touch probe cycles (see also User's Manual for Cycle Programming)

Measured actual values	Parameter value
Angle of a straight line	Q150
Center in reference axis	Q151
Center in minor axis	Q152
Diameter	Q153
Pocket length	Q154
Pocket width	Q155
Length of the axis selected in the cycle	Q156
Position of the centerline	Q157
Angle in the A axis	Q158
Angle in the B axis	Q159
Coordinate of the axis selected in the cycle	Q160

Measured deviation	Parameter value
Center in reference axis	Q161
Center in minor axis	Q162
Diameter	Q163
Pocket length	Q164
Pocket width	Q165
Measured length	Q166
Position of the centerline	Q167

Determined space angle	Parameter value
Rotation about the A axis	Q170
Rotation about the B axis	Q171
Rotation about the C axis	Q172

Workpiece status	Parameter value
Good	Q180
Rework	Q181
Scrap	Q182

Tool measurement with the BLUM laser	Parameter value
Reserved	Q190
Reserved	Q191
Reserved	Q192
Reserved	Q193

Reserved for internal use	Parameter value
Marker for cycles	Q195
Marker for cycles	Q196
Marker for cycles (machining patterns)	Q197
Number of the last active measuring cycle	Q198

Status of tool measurement with TT	Parameter value
Tool within tolerance	Q199 = 0.0
Tool is worn (LTOL/RTOL is exceeded)	Q199 = 1.0
Tool is broken (LBREAK/RBREAK is exceeded)	Q199 = 2.0

8.13 Programming examples

Example: Ellipse

Program sequence

- The contour of the ellipse is approximated by many short lines (defined in Q7). The more calculation steps you define for the lines, the smoother the curve becomes.
- The milling direction is determined with the starting angle and end angle in the plane :
  Machining direction is clockwise:
  Starting angle > end angle
  Machining direction is counterclockwise:
  Starting angle < end angle
- The tool radius is not taken into account.

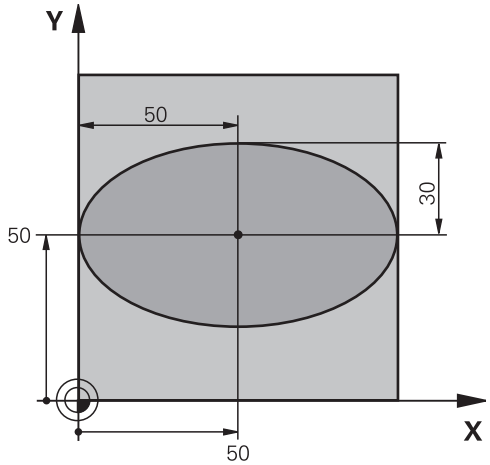

0 BEGIN PGM ELLIPSE MM	
1 FN 0: Q1 = +50	Center in X axis
2 FN 0: Q2 = +50	Center in Y axis
3 FN 0: Q3 = +50	Semiaxis in X
4 FN 0: Q4 = +30	Semiaxis in Y
5 FN 0: Q5 = +0	Starting angle in the plane
6 FN 0: Q6 = +360	End angle in the plane
7 FN 0: Q7 = +40	Number of calculation steps
8 FN 0: Q8 = +0	Rotational position of the ellipse
9 FN 0: Q9 = +5	Milling depth
10 FN 0: Q10 = +100	Feed rate for plunging
11 FN 0: Q11 = +350	Feed rate for milling
12 FN 0: Q12 = +2	Set-up clearance for pre-positioning
13 BLK FORM 0.1 Z X+0 Y+0 Z-20	Definition of workpiece blank
14 BLK FORM 0.2 X+100 Y+100 Z+0	
15 TOOL CALL 1 Z S4000	Tool call
16 L Z+250 R0 FMAX	Retract the tool
17 CALL LBL 10	Call machining operation
18 L Z+100 R0 FMAX M2	Retract the tool, end program
19 LBL 10	Subprogram 10: Machining operation
20 CYCL DEF 7.0 DATUM SHIFT	Shift datum to center of ellipse
21 CYCL DEF 7.1 X+Q1	
22 CYCL DEF 7.2 Y+Q2	
23 CYCL DEF 10.0 ROTATION	Account for rotational position in the plane
24 CYCL DEF 10.1 ROT+Q8	
25 Q35 = (Q6 -Q5) / Q7	Calculate angle increment
26 Q36 = Q5	Copy starting angle
27 Q37 = 0	Set counter

28 Q21 = Q3 *COS Q36	Calculate X coordinate for starting point
29 Q22 = Q4 *SIN Q36	Calculate Y coordinate for starting point
30 L X+Q21 Y+Q22 R0 FMAX M3	Move to starting point in the plane
31 L Z+Q12 R0 FMAX	Pre-position in spindle axis to set-up clearance
32 L Z-Q9 R0 FQ10	Move to working depth
33 LBL 1	
34 Q36 = Q36 +Q35	Update the angle
35 Q37 = Q37 +1	Update the counter
36 Q21 = Q3 *COS Q36	Calculate the current X coordinate
37 Q22 = Q4 *SIN Q36	Calculate the current Y coordinate
38 L X+Q21 Y+Q22 R0 FQ11	Move to next point
39 FN 12: IF +Q37 LT +Q7 GOTO LBL 1	Unfinished? If not finished, return to LBL 1
40 CYCL DEF 10.0 ROTATION	Reset the rotation
41 CYCL DEF 10.1 ROT+0	
42 CYCL DEF 7.0 DATUM SHIFT	Reset the datum shift
43 CYCL DEF 7.1 X+0	
44 CYCL DEF 7.2 Y+0	
45 L Z+Q12 R0 FMAX	Move to set-up clearance
46 LBL 0	End of subprogram
47 END PGM ELLIPSE MM	

Example: Concave cylinder machined with spherical cutter

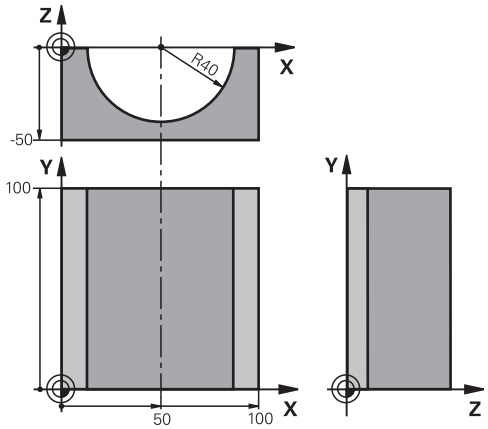

Program sequence

- This program functions only with a spherical cutter. The tool length refers to the sphere center.
- The contour of the cylinder is approximated by many short line segments (defined in Q13). The more line segments you define, the smoother the curve becomes.
- The cylinder is milled in longitudinal cuts (here: parallel to the Y axis).
- The milling direction is determined with the starting angle and end angle in space :
  Machining direction clockwise:
  Starting angle > end angle
  Machining direction counterclockwise:
  Starting angle < end angle
- The tool radius is compensated automatically.

0 BEGIN PGM CYLIN MM	
1 FN 0: Q1 = +50	Center in X axis
2 FN 0: Q2 = +0	Center in Y axis
3 FN 0: Q3 = +0	Center in Z axis
4 FN 0: Q4 = +90	Starting angle in space (Z/X plane)
5 FN 0: Q5 = +270	End angle in space (Z/X plane)
6 FN 0: Q6 = +40	Cylinder radius
7 FN 0: Q7 = +100	Length of the cylinder
8 FN 0: Q8 = +0	Rotational position in the X/Y plane
9 FN 0: Q10 = +5	Allowance for cylinder radius
10 FN 0: Q11 = +250	Feed rate for plunging
11 FN 0: Q12 = +400	Feed rate for milling
12 FN 0: Q13 = +90	Number of cuts
13 BLK FORM 0.1 Z X+0 Y+0 Z-50	Definition of workpiece blank
14 BLK FORM 0.2 X+100 Y+100 Z+0	
15 TOOL CALL 1 Z S4000	Tool call
16 L Z+250 R0 FMAX	Retract the tool
17 CALL LBL 10	Call machining operation
18 FN 0: Q10 = +0	Reset allowance
19 CALL LBL 10	Call machining operation
20 L Z+100 R0 FMAX M2	Retract the tool, end program

21 LBL 10	Subprogram 10: Machining operation
22 Q16 = Q6 -Q10 - Q108	Account for allowance and tool, based on the cylinder radius
23 FN 0: Q20 = +1	Set counter
24 FN 0: Q24 = +Q4	Copy starting angle in space (Z/X plane)
25 Q25 = (Q5 -Q4) / Q13	Calculate angle increment
26 CYCL DEF 7.0 DATUM SHIFT	Shift datum to center of cylinder (X axis)
27 CYCL DEF 7.1 X+Q1	
28 CYCL DEF 7.2 Y+Q2	
29 CYCL DEF 7.3 Z+Q3	
30 CYCL DEF 10.0 ROTATION	Account for rotational position in the plane
31 CYCL DEF 10.1 ROT+Q8	
32 L X+0 Y+0 R0 FMAX	Pre-position in the plane to the cylinder center
33 L Z+5 R0 F1000 M3	Pre-position in the spindle axis
34 LBL 1	
35 CC Z+0 X+0	Set pole in the Z/X plane
36 LP PR+Q16 PA+Q24 FQ11	Move to starting position on cylinder, plunge-cutting obliquely into the material
37 L Y+Q7 R0 FQ12	Longitudinal cut in Y+ direction
38 FN 1: Q20 = +Q20 + +1	Update the counter
39 FN 1: Q24 = +Q24 + +Q25	Update solid angle
40 FN 11: IF +Q20 GT +Q13 GOTO LBL 99	Finished? If finished, jump to end
41 LP PR+Q16 PA+Q24 FQ11	Move in an approximated "arc" for the next longitudinal cut
42 L Y+0 R0 FQ12	Longitudinal cut in Y– direction
43 FN 1: Q20 = +Q20 + +1	Update the counter
44 FN 1: Q24 = +Q24 + +Q25	Update solid angle
45 FN 12: IF +Q20 LT +Q13 GOTO LBL 1	Unfinished? If not finished, return to LBL 1
46 LBL 99	
47 CYCL DEF 10.0 ROTATION	Reset the rotation
48 CYCL DEF 10.1 ROT+0	
49 CYCL DEF 7.0 DATUM SHIFT	Reset the datum shift
50 CYCL DEF 7.1 X+0	
51 CYCL DEF 7.2 Y+0	
52 CYCL DEF 7.3 Z+0	
53 LBL 0	End of subprogram
54 END PGM CYLIN	

Example: Convex sphere machined with end mill

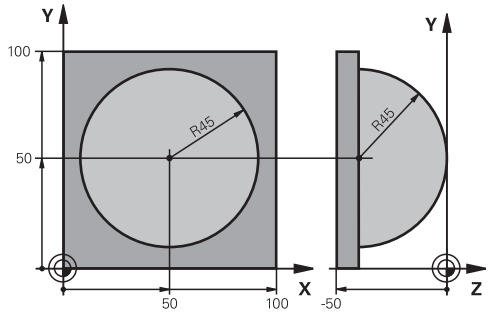

Program sequence

- This program requires an end mill.
- The contour of the sphere is approximated by many short lines (in the Z/X plane, defined in Q14). The smaller you define the angle increment, the smoother the curve becomes.
- You can determine the number of contour cuts through the angle increment in the plane (defined in Q18).
- The tool moves upward in three-dimensional cuts.
- The tool radius is compensated automatically.

0 BEGIN PGM SPHERE MM	
1 FN 0: Q1 = +50	Center in X axis
2 FN 0: Q2 = +50	Center in Y axis
3 FN 0: Q4 = +90	Starting angle in space (Z/X plane)
4 FN 0: Q5 = +0	End angle in space (Z/X plane)
5 FN 0: Q14 = +5	Angle increment in space
6 FN 0: Q6 = +45	Sphere radius
7 FN 0: Q8 = +0	Starting angle of rotational position in the X/Y plane
8 FN 0: Q9 = +360	End angle of rotational position in the X/Y plane
9 FN 0: Q18 = +10	Angle increment in the X/Y plane for roughing
10 FN 0: Q10 = +5	Allowance in sphere radius for roughing
11 FN 0: Q11 = +2	Set-up clearance for pre-positioning in the spindle axis
12 FN 0: Q12 = +350	Feed rate for milling
13 BLK FORM 0.1 Z X+0 Y+0 Z-50	Definition of workpiece blank
14 BLK FORM 0.2 X+100 Y+100 Z+0	
15 TOOL CALL 1 Z S4000	Tool call
16 L Z+250 R0 FMAX	Retract the tool
17 CALL LBL 10	Call machining operation
18 FN 0: Q10 = +0	Reset allowance
19 FN 0: Q18 = +5	Angle increment in the X/Y plane for finishing
20 CALL LBL 10	Call machining operation
21 L Z+100 R0 FMAX M2	Retract the tool, end program
22 LBL 10	Subprogram 10: Machining operation
23 FN 1: Q23 = +Q11 + +Q6	Calculate Z coordinate for pre-positioning
24 FN 0: Q24 = +Q4	Copy starting angle in space (Z/X plane)
25 FN 1: Q26 = +Q6 + +Q108	Compensate sphere radius for pre-positioning
26 FN 0: Q28 = +Q8	Copy rotational position in the plane
27 FN 1: Q16 = +Q6 + -Q10	Account for allowance in the sphere radius
28 CYCL DEF 7.0 DATUM SHIFT	Shift datum to center of sphere
29 CYCL DEF 7.1 X+Q1	
30 CYCL DEF 7.2 Y+Q2	
31 CYCL DEF 7.3 Z-Q16	
32 CYCL DEF 10.0 ROTATION	Account for starting angle of rotational position in the plane

33 CYCL DEF 10.1 ROT+Q8	
34 LBL 1	Pre-position in the spindle axis
35 CC X+0 Y+0	Set pole in the X/Y plane for pre-positioning
36 LP PR+Q26 PA+Q8 R0 FQ12	Pre-position in the plane
37 CC Z+0 X+Q108	Set pole in the Z/X plane, offset by the tool radius
38 L Y+0 Z+0 FQ12	Move to working depth
39 LBL 2	
40 LP PR+Q6 PA+Q24 FQ12	Move upward in an approximated "arc"
41 FN 2: Q24 = +Q24 - +Q14	Update solid angle
42 FN 11: IF +Q24 GT +Q5 GOTO LBL 2	Inquire whether an arc is finished. If not finished, return to LBL 2
43 LP PR+Q6 PA+Q5	Move to the end angle in space
44 L Z+Q23 R0 F1000	Retract in the spindle axis
45 L X+Q26 R0 FMAX	Pre-position for next arc
46 FN 1: Q28 = +Q28 + +Q18	Update rotational position in the plane
47 FN 0: Q24 = +Q4	Reset solid angle
48 CYCL DEF 10.0 ROTATION	Activate new rotational position
49 CYCL DEF 10.0 ROT+Q28	
50 FN 12: IF +Q28 LT +Q9 GOTO LBL 1	
51 FN 9: IF +Q28 EQU +Q9 GOTO LBL 1	Unfinished? If not finished, return to LBL 1
52 CYCL DEF 10.0 ROTATION	Reset the rotation
53 CYCL DEF 10.1 ROT+0	
54 CYCL DEF 7.0 DATUM SHIFT	Reset the datum shift
55 CYCL DEF 7.1 X+0	
56 CYCL DEF 7.2 Y+0	
57 CYCL DEF 7.3 Z+0	
58 LBL 0	End of subprogram
59 END PGM SPHERE MM	

9

Programming: Miscellaneous functions

9.1 Entering miscellaneous functions M and STOP

Fundamentals

With the TNC's miscellaneous functions—also called M functions—you can affect

- the program run, e.g., a program interruption
- the machine functions, such as switching spindle rotation and coolant supply on and off
- the path behavior of the tool

The machine tool builder may add some M functions that are not described in this User's Manual. Refer to your machine manual.

You can enter up to two M functions at the end of a positioning block or in a separate block. The TNC displays the following dialog question: **Miscellaneous function M ?**

You usually enter only the number of the M function in the programming dialog. Some M functions can be programmed with additional parameters. In this case, the dialog is continued for the parameter input.

In the Manual Operation and El. Handwheel modes of operation, the M functions are entered with the M soft key.

Please note that some M functions become effective at the start of a positioning block, and others at the end, regardless of their position in the NC block.

M functions come into effect in the block in which they are called.

Some M functions are effective only in the block in which they are programmed. Unless the M function is only effective blockwise, either you must cancel it in a subsequent block with a separate M function, or it is automatically canceled by the TNC at the end of the program.

Entering an M function in a STOP block

If you program a STOP block, the program run or test run is interrupted at the block, for example for tool inspection. You can also enter an M function in a STOP block:

STOP

- To program an interruption of program run, press the STOP key.
- Enter a miscellaneous function M

Example NC blocks

```
87 STOP M6
```

9.2 M functions for program run inspection, spindle and coolant

Overview

The machine tool builder can influence the behavior of the miscellaneous functions described below. Refer to your machine manual.

M	Effect	Effective at block	Start	End
M0	Program STOP Spindle STOP			■
M1	Optional program STOP Spindle STOP if necessary Coolant OFF if necessary (not effective during Test Run, function determined by the machine tool builder)			■
M2	STOP program run Spindle STOP Coolant OFF Return jump to block 1 CLEAR status display (depending on machine parameter **clearMode**)			■
M3	Spindle ON clockwise		■	
M4	Spindle ON counterclockwise		■	
M5	Spindle STOP			■
M6	Tool change Spindle STOP Program STOP			■
M8	Coolant ON		■	
M9	Coolant OFF			■
M13	Spindle ON clockwise Coolant ON		■	
M14	Spindle ON counterclockwise Coolant ON		■	
M30	Same as M2			■

9.3 Miscellaneous functions for coordinate data

Programming machine-referenced coordinates: M91/M92

Scale reference point

On the scale, a reference mark indicates the position of the scale reference point.

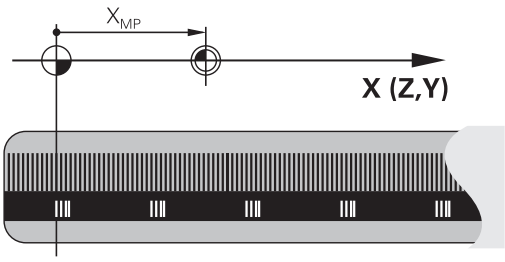

Machine datum

The machine datum is required for the following tasks:

- Defining the limits of traverse (software limit switches)
- Approach machine-referenced positions (such as tool change positions)
- Set a workpiece datum

The distance in each axis from the scale reference point to the machine datum is defined by the machine tool builder in a machine parameter.

Standard behavior

The TNC references coordinates to the workpiece datum (See "Datum setting without a 3-D touch probe", page 392).

Behavior with M91—Machine datum

If you want the coordinates in a positioning block to be referenced to the machine datum, end the block with M91.

> If you program incremental coordinates in an M91 block, enter them with respect to the last programmed M91 position. If no M91 position is programmed in the active NC block, then enter the coordinates with respect to the current tool position.

The coordinate values on the TNC screen are referenced to the machine datum. Switch the display of coordinates in the status display to REF (See "Status displays", page 69).

Behavior with M92—Additional machine datum

In addition to the machine datum, the machine tool builder can also define an additional machine-based position as a reference point.

For each axis, the machine tool builder defines the distance between the machine datum and this additional machine datum. Refer to your machine manual.

If you want the coordinates in a positioning block to be based on the additional machine datum, end the block with M92.

Radius compensation remains the same in blocks that are programmed with M91 or M92. The tool length, however, is **not** compensated.

Effect

M91 and M92 are effective only in the blocks in which they are programmed.

M91 and M92 take effect at the start of block.

Workpiece datum

If you want the coordinates to always be referenced to the machine datum, you can inhibit datum setting for one or more axes.

If datum setting is inhibited for all axes, the TNC no longer displays the SET DATUM soft key in the Manual Operation mode.

The figure shows coordinate systems with the machine datum and workpiece datum.

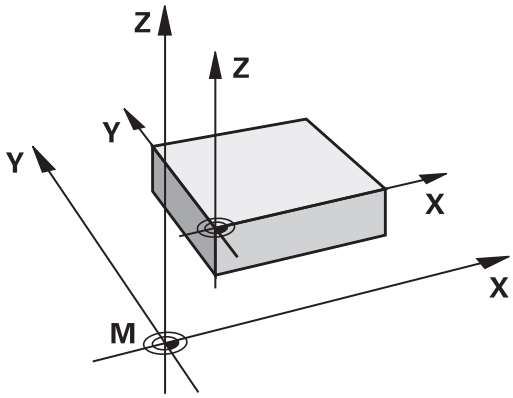

M91/M92 in the Test Run mode

In order to be able to graphically simulate M91/M92 movements, you need to activate working space monitoring and display the workpiece blank referenced to the set datum (See "Showing the workpiece blank in the working space ", page 447).

Moving to positions in a non-tilted coordinate system with a tilted working plane: M130

Standard behavior with a tilted working plane

The TNC places the coordinates in the positioning blocks in the tilted coordinate system.

Behavior with M130

The TNC places coordinates in straight line blocks in the untilted coordinate system.

The TNC then positions the (tilted) tool to the programmed coordinates of the untilted system.

> **!** **Danger of collision!**
> Subsequent positioning blocks or fixed cycles are carried out in a tilted coordinate system. This can lead to problems in fixed cycles with absolute pre-positioning.
> The function M130 is allowed only if the tilted working plane function is active.

Effect

M130 functions blockwise in straight-line blocks without tool radius compensation.

9.4 Miscellaneous functions for path behavior

Machining small contour steps: M97

Standard behavior

The TNC inserts a transition arc at outside corners. If the contour steps are very small, however, the tool would damage the contour

In such cases the TNC interrupts program run and generates the error message "Tool radius too large."

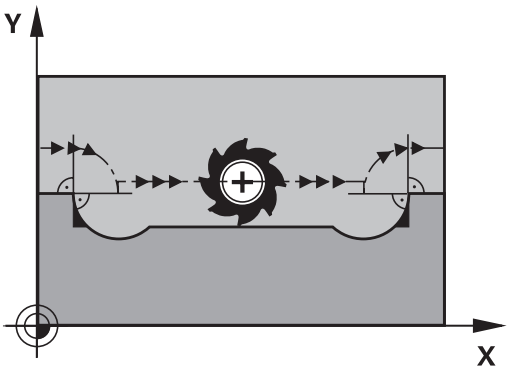

Behavior with M97

The TNC calculates the intersection of the contour elements—as at inside corners—and moves the tool over this point.

Program M97 in the same block as the outside corner.

> Instead of **M97** you should use the much more powerful function **M120 LA**,See "Calculating the radius-compensated path in advance (LOOK AHEAD): M120 (Miscellaneous Functions software option)"

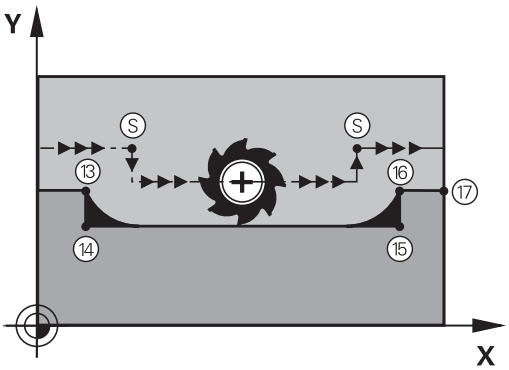

Effect

M97 is effective only in the blocks in which it is programmed.

> A corner machined with M97 will not be completely finished. You may wish to rework the contour with a smaller tool.

Example NC blocks

5 TOOL DEF L ... R+20	Large tool radius
...	
13 L X... Y... R... F... M97	Move to contour point 13
14 L IY-0.5 ... R... F...	Machine small contour step 13 to 14
15 L IX+100 ...	Move to contour point 15
16 L IY+0.5 ... R... F... M97	Machine small contour step 15 to 16
17 L X... Y...	Move to contour point 17

Machining open contour corners: M98

Standard behavior

The TNC calculates the intersections of the cutter paths at inside corners and moves the tool in the new direction at those points.

If the contour is open at the corners, however, this will result in incomplete machining.

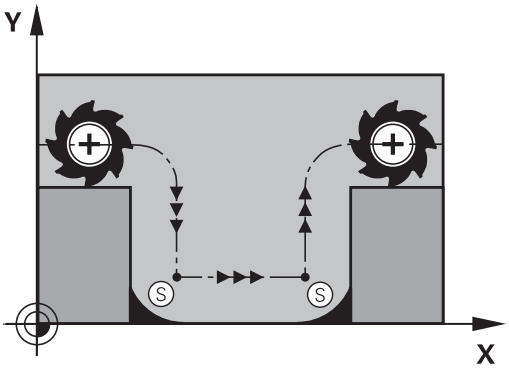

Behavior with M98

With the miscellaneous function M98, the TNC temporarily suspends radius compensation to ensure that both corners are completely machined:

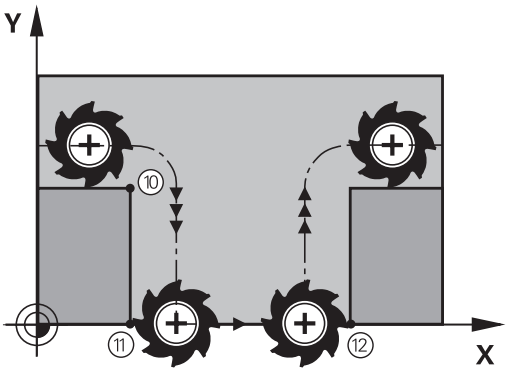

Effect

M98 is effective only in the blocks in which it is programmed.

M98 takes effect at the end of block.

Example NC blocks

Move to the contour points 10, 11 and 12 in succession:

```
10 L X... Y... RL F
11 L X... IY... M98
12 L IX+ ...
```

Feed rate factor for plunging movements: M103

Standard behavior

The TNC moves the tool at the last programmed feed rate, regardless of the direction of traverse.

Behavior with M103

The TNC reduces the feed rate when the tool moves in the negative direction of the tool axis. The feed rate for plunging FZMAX is calculated from the last programmed feed rate FPROG and a factor F%:

FZMAX = FPROG x F%

Programming M103

If you enter M103 in a positioning block, the TNC continues the dialog by asking you the factor F.

Effect

M103 becomes effective at the start of block.
To cancel M103, program M103 once again without a factor.

> M103 is also effective in an active tilted working plane. The feed rate reduction is then effective during traverse in the negative direction of the **tilted** tool axis.

Example NC blocks

The feed rate for plunging is to be 20% of the feed rate in the plane.

...	Actual contouring feed rate (mm/min):
17 L X+20 Y+20 RL F500 M103 F20	500
18 L Y+50	500
19 L IZ-2.5	100
20 L IY+5 IZ-5	141
21 L IX+50	500
22 L Z+5	500

Feed rate in millimeters per spindle revolution: M136

Standard behavior

The TNC moves the tool at the programmed feed rate F in mm/min

Behavior with M136

> In inch-programs, M136 is not permitted in combination with the new alternate feed rate FU.
>
> The spindle is not permitted to be controlled when M136 is active.

With M136, the TNC does not move the tool in mm/min, but rather at the programmed feed rate F in millimeters per spindle revolution. If you change the spindle speed by using the spindle override, the TNC changes the feed rate accordingly.

Effect

M136 becomes effective at the start of block.

You can cancel M136 by programming M137.

Feed rate for circular arcs: M109/M110/M111

Standard behavior

The TNC applies the programmed feed rate to the path of the tool center.

Behavior at circular arcs with M109

The TNC adjusts the feed rate for circular arcs at inside and outside contours so that the feed rate at the tool cutting edge remains constant.

> **Caution: Danger to the workpiece and tool!**
> On very small outside corners the TNC may increase the feed rate so much that the tool or workpiece can be damaged. Avoid **M109** with small outside corners.

Behavior at circular arcs with M110

The TNC keeps the feed rate constant for circular arcs at inside contours only. At outside contours, the feed rate is not adjusted.

> If you define M109 or M110 before calling a machining cycle with a number greater than 200, the adjusted feed rate is also effective for circular arcs within these machining cycles. The initial state is restored after finishing or aborting a machining cycle.

Effect

M109 and M110 become effective at the start of block. To cancel M109 or M110, enter M111.

Calculating the radius-compensated path in advance (LOOK AHEAD): M120

Standard behavior

If the tool radius is larger than the contour step that is to be machined with radius compensation, the TNC interrupts program run and generates an error message. M97 (See "Machining small contour steps: M97", page 311) inhibits the error message, but this results in dwell marks and will also move the corner.

If the programmed contour contains undercut features, the tool may damage the contour.

Behavior with M120

The TNC checks radius-compensated paths for contour undercuts and tool path intersections, and calculates the tool path in advance from the current block. Areas of the contour that might be damaged by the tool are not machined (dark areas in figure).
You can also use M120 to calculate the radius compensation for digitized data or data created on an external programming system. This means that deviations from the theoretical tool radius can be compensated.

Use LA (Look Ahead) behind M120 to define the number of blocks (maximum: 99) that you want the TNC to calculate in advance. Note that the larger the number of blocks you choose, the higher the block processing time will be.

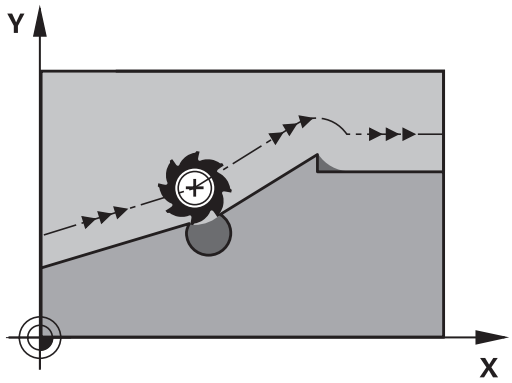

Input

If you enter M120 in a positioning block, the TNC continues the dialog for this block by asking you the number of blocks LA that are to be calculated in advance.

Effect

M120 must be located in an NC block that also contains radius compensation **RL** or **RR**. M120 is then effective from this block until

- radius compensation is canceled with **R0**
- M120 LA0 is programmed, or
- M120 is programmed without LA, or
- another program is called with **PGM CALL**
- the working plane is tilted with Cycle **19** or the PLANE function

M120 becomes effective at the start of block.

Restrictions

- After an external or internal stop, you can only re-enter the contour with the function RESTORE POS. AT N. Before you start the block scan, you must cancel M120, otherwise the TNC will output an error message.
- When using the path functions **RND** and **CHF**, the blocks before and after **RND** or **CHF** must contain only coordinates in the working plane.
- If you want to approach the contour on a tangential path, you must use the function APPR LCT. The block with APPR LCT must contain only coordinates of the working plane
- If you want to depart the contour on a tangential path, use the function DEP LCT. The block with DEP LCT must contain only coordinates of the working plane
- Before using the functions listed below, you have to cancel M120 and the radius compensation:
  - Cycle **32** Tolerance
  - Cycle **19** Working plane
  - PLANE function
  - M114
  - M128
  - TCPM FUNCTION

Superimposing handwheel positioning during program run: M118

Standard behavior

In the program run modes, the TNC moves the tool as defined in the part program.

Behavior with M118

M118 permits manual corrections by handwheel during program run. Just program M118 and enter an axis-specific value (linear or rotary axis) in millimeters.

Input

If you enter M118 in a positioning block, the TNC continues the dialog for this block by asking you the axis-specific values. The coordinates are entered with the orange axis direction buttons or the ASCII keyboard.

Effect

Cancel handwheel positioning by programming M118 once again without coordinate input.

M118 becomes effective at the start of block.

Example NC blocks

You want to be able to use the handwheel during program run to move the tool in the working plane X/Y by ±1 mm and in the rotary axis B by ±5° from the programmed value:

```
L X+0 Y+38.5 RL F125 M118 X1 Y1 B5
```

M118 is effective in a tilted coordinate system if you activate the tilted working plane function for the Manual Operation mode. If the tilted working plane function is not active for the Manual Operation mode, the original coordinate system is effective.

M118 also functions in the Positioning with MDI mode of operation!

If M118 is active, the MANUAL TRAVERSE function is not available after a program interruption!

Virtual tool axis VT

Your machine tool builder must have prepared the TNC for this function. Refer to your machine manual.

With the virtual tool axis you can also traverse in the direction of a sloping tool with the handwheel with machines with swivel heads. To traverse in a virtual tool axis direction select the VT axis on the display of your handwheel, See "Traverse with electronic handwheels", page 380. With an HR 5xx handwheel you can select the virtual axis directly with the orange VI axis key if required (refer to your machine manual).

You can also carry out handwheel superimpositioning in the currently active tool axis direction with the M118 function. For this purpose, you must at least define the spindle axis with the permitted traverse range (e.g. M118 Z5) in the M118 function and select the VT axis on the handwheel.

Retraction from the contour in the tool-axis direction: M140

Standard behavior

In the program run modes, the TNC moves the tool as defined in the part program.

Behavior with M140

With M140 MB (move back) you can enter a path in the direction of the tool axis for departure from the contour.

Input

If you enter M140 in a positioning block, the TNC continues the dialog and asks for the desired path of tool departure from the contour. Enter the requested path that the tool should follow when departing the contour, or press the MB MAX soft key to move to the limit of the traverse range.

In addition, you can program the feed rate at which the tool traverses the entered path. If you do not enter a feed rate, the TNC moves the tool along the entered path at rapid traverse.

Effect

M140 is effective only in the block in which it is programmed.

M140 becomes effective at the start of block.

Example NC blocks

Block 250: Retract the tool 50 mm from the contour.

Block 251: Move the tool to the limit of the traverse range.

```
250 L X+0 Y+38.5 F125 M140 MB 50 F750
251 L X+0 Y+38.5 F125 M140 MB MAX
```

M140 is also effective if the tilted-working-plane function is active. On machines with tilting heads, the TNC then moves the tool in the tilted coordinate system.

With **M140 MB MAX** you can only retract in the positive direction.

Always define a TOOL CALL with a tool axis before entering **M140**, otherwise the direction of traverse is not defined.

Suppressing touch probe monitoring: M141

Standard behavior

When the stylus is deflected, the TNC outputs an error message as soon as you attempt to move a machine axis.

Behavior with M141

The TNC moves the machine axes even if the touch probe is deflected. This function is required if you wish to write your own measuring cycle in connection with measuring cycle 3 in order to retract the stylus by means of a positioning block after it has been deflected.

> **!** **Danger of collision!**
> If you use M141, make sure that you retract the touch probe in the correct direction.
> M141 functions only for movements with straight-line blocks.

Effect

M141 is effective only in the block in which it is programmed.

M141 becomes effective at the start of block.

Deleting basic rotation: M143

Standard behavior

The basic rotation remains in effect until it is reset or is overwritten with a new value.

Behavior with M143

The TNC erases a programmed basic rotation from the NC program.

> The function **M143** is not permitted during mid-program startup.

Effect

M143 is effective only in the block in which it is programmed.

M143 becomes effective at the start of the block.

Automatically retract tool from the contour at an NC stop: M148

Standard behavior

At an NC stop the TNC stops all traverse movements. The tool stops moving at the point of interruption.

Behavior with M148

The M148 function must be enabled by the machine tool builder. The machine tool builder defines in a machine parameter the path that the TNC is to traverse for a **LIFTOFF** command.

The TNC retracts the tool by up to 2 mm in the direction of the tool axis if, in the **LIFTOFF** column of the tool table, you set the parameter **Y** for the active tool See "Enter tool data into the table", page 144.

LIFTOFF takes effect in the following situations:

- An NC stop triggered by you
- An NC stop triggered by the software, e.g. if an error occurred in the drive system
- When a power interruption occurs

Danger of collision!

Remember that, especially on curved surfaces, the surface can be damaged during return to the contour. Retract the tool before returning to the contour!

In the **CfgLiftOff** machine parameter, define the value by which the tool is to be retracted. In the **CfgLiftOff** machine parameter you can also switch the function off.

Effect

M148 remains in effect until deactivated with M149.

M148 becomes effective at the start of block, M149 at the end of block.

Rounding corners: M197

Standard behavior

The TNC inserts a transition arc at outside corners with active radius compensation. This my lead to grinding of the edge.

Behavior with M197

With Function M197 the contour at the corner is tangentially extended and a smaller transition arc is then inserted. When you program Function M197 and then press the ENT key, the TNC opens the **DL** input field. In **DL** you define the length with which the TNC extends the contour elements. With M197 the corner radius is reduced, the corner grinds less and the traverse movement is still tangential.

Effect

The Function M197 is effective blockwise and is only effective on outside corners.

Example NC blocks

```
L X... Y... RL M197 DL0.876
```

10

Programming: Special functions

10.1 Overview of special functions

The TNC provides the following powerful special functions for a large number of applications:

Function	Description
Working with text files	page 337
Working with freely definable tables	page 341

Press the SPEC FCT and the corresponding soft keys to access further special functions of the TNC. The following tables will give you an overview of which functions are available.

Main menu for SPEC FCT special functions

SPEC FCT

▶ Press the special functions key

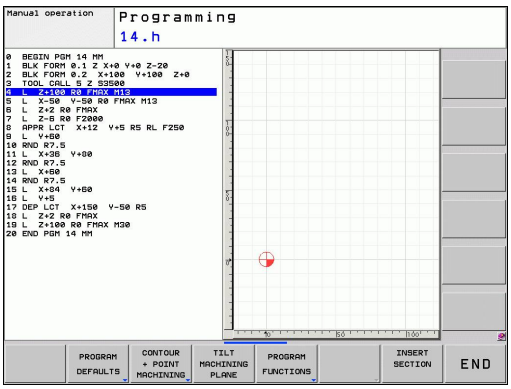

Function	Soft key	Description
Define program defaults	PROGRAM DEFAULTS	page 326
Functions for contour and point machining	CONTOUR + POINT MACHINING	page 327
Define the **PLANE** function	TILT MACHINING PLANE	page 351
Define different conversational functions	PROGRAM FUNCTIONS	page 328
Define structure items	INSERT SECTION	page 119

Program defaults menu

PROGRAM DEFAULTS

▶ Select the program defaults menu

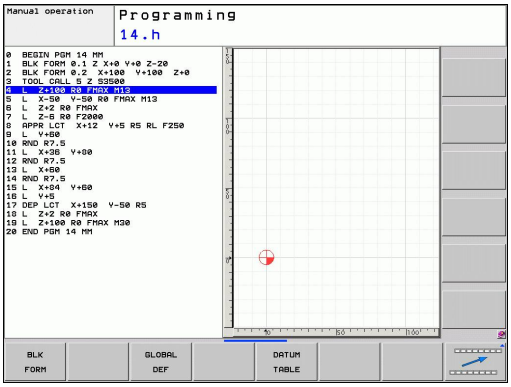

Function	Soft key	Description
Define workpiece blank	BLK FORM	page 85
Select datum table	DATUM TABLE	See User's Manual for Cycles

Functions for contour and point machining menu

CONTOUR + POINT MACHINING

- Select the menu for functions for contour and point machining

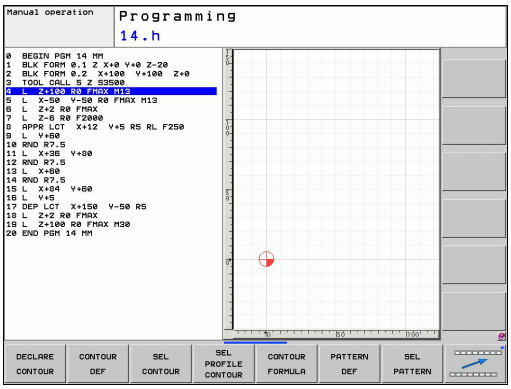

Function	Soft key	Description
Assign contour description	DECLARE CONTOUR	See User's Manual for Cycles
Define a simple contour formula	CONTOUR DEF	See User's Manual for Cycles
Select a contour definition	SEL CONTOUR	See User's Manual for Cycles
Define a complex contour formula	CONTOUR FORMULA	See User's Manual for Cycles
Define regular machining pattern	PATTERN DEF	See User's Manual for Cycles
Select the point file with machining positions	SEL PATTERN	See User's Manual for Cycles

Menu of various conversational functions

PROGRAM FUNCTIONS

- Select the menu for defining various conversational functions

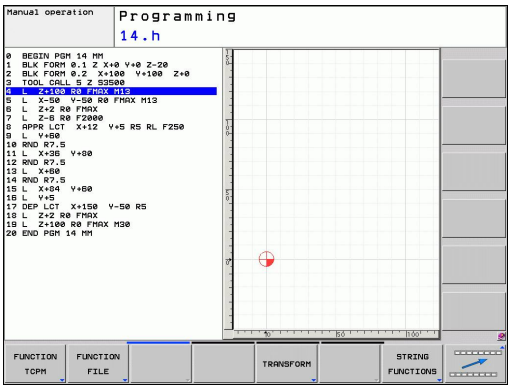

Function	Soft key	Description
Define file functions	FUNCTION FILE	page 333
Define the positioning behavior for parallel axes U, V, W	FUNCTION PARAX	page 329
Define coordinate transformations	TRANSFORM	page 334
Define string functions	STRING FUNCTIONS	page 283
Add comments	INSERT COMMENT	page 117

10.2 Working with the Parallel Axes U, V and W

Overview

Your machine must be configured by the machine manufacturer if you want to use parallel-axis functions.

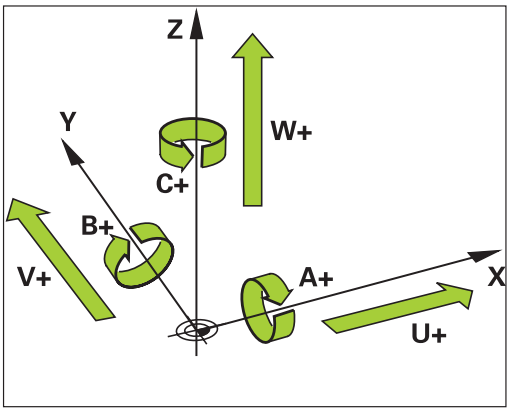

The axes U, V and W are secondary axes parallel to the principal axes X, Y and Z, respectively. Principal axes and parallel axes are permanently assigned to each other.

Principal axis	Parallel axis	Rotary axis
X	U	A
Y	V	B
Z	W	C

The TNC provides the following functions for machining with the parallel axes U, V and W:

Function	Meaning	Soft key	Page
PARAXCOMP	Define the TNC's behavior when positioning parallel axes	FUNCTION PARAXCOMP	331
PARAXMODE	Define the axes the TNC is to use for machining	FUNCTION PARAXMODE	331

After the TNC is started up, the standard configuration is always effective.

Parallel-axis functions are reset by the following functions:

- Selection of a program
- End of program
- M2 or M30
- Program cancelation (**PARAXCOMP** remains active)
- **PARAXCOMP OFF** or **PARAXMODE OFF**

You must deactivate the parallel-axis functions before switching the machine kinematics.

FUNCTION PARAXCOMP DISPLAY

Use the **PARAXCOMP DISPLAY** function to activate the display function for parallel axis movements. The TNC considers the traverse movements of the parallel axis in the position display of the associated principal axis (sum display). Therefore, the position display of the principal axis always displays the relative distance from the tool to the workpiece, regardless of whether you move the principal axis or the minor axis.

Proceed as follows for the definition:

SPEC FCT
- Show the soft-key row with special functions

PROGRAM FUNCTIONS
- Select the menu for defining various plain-language functions

FUNCTION PARAX
- Select **FUNCTION PARAX**

FUNCTION PARAXCOMP
- Select **FUNCTION PARAXCOMP**

FUNCTION PARAXCOMP DISPLAY
- Select **FUNCTION PARAXCOMP DISPLAY**
- Define the parallel axis whose movements the TNC is to take into account in the position display of the associated principal axis

NC block

```
13 FUNCTION PARAXCOMP DISPLAY W
```

FUNCTION PARAXCOMP MOVE

The **PARAXCOMP MOVE** function can be used only in connection with straight-line blocks (**L**).

The TNC uses the **PARAXCOMP MOVE** function to compensate for the movement of a parallel axis by performing a compensation movement in the associated principal axis.

For example, if a parallel axis moves in the negative W-axis direction, the principal axis Z simultaneously moves in the positive direction by the same value. The relative distance from the tool to the workpiece remains the same. Application in gantry-type milling machine: Retract the spindle sleeve to move the cross beam down simultaneously.

Proceed as follows for the definition:

SPEC FCT
- Show the soft-key row with special functions

PROGRAM FUNCTIONS
- Select the menu for defining various plain-language functions

FUNCTION PARAX
- Select **FUNCTION PARAX**

FUNCTION PARAXCOMP
- Select **FUNCTION PARAXCOMP**

FUNCTION PARAXCOMP MOVE
- Select **FUNCTION PARAXCOMP MOVE**
- Define the parallel axis

NC block

```
13 FUNCTION PARAXCOMP MOVE W
```

FUNCTION PARAXCOMP OFF

Use the **PARAXCOMP OFF** function to switch off the parallel-axis functions **PARAXCOMP DISPLAY** and **PARAXCOMP MOVE**. Proceed as follows for the definition:

NC blocks

```
13 FUNCTION PARAXCOMP OFF
13 FUNCTION PARAXCOMP OFF W
```

SPEC FCT
- Show the soft-key row with special functions

PROGRAM FUNCTIONS
- Select the menu for defining various plain-language functions

FUNCTION PARAX
- Select **FUNCTION PARAX**

FUNCTION PARAXCOMP
- Select **FUNCTION PARAXCOMP**

FUNCTION PARAXCOMP OFF
- Select **FUNCTION PARAXCOMP OFF**. If you want to switch off the parallel-axis functions only for individual parallel axes, then the respective axis must be specifically indicated.

FUNCTION PARAXMODE

NC block

```
13 FUNCTION PARAXMODE X Y W
```

> To activate the **PARAXMODE** function, you must always define three axes.
>
> If you combine the **PARAXMODE** and PARAXCOMP functions, the TNC deactivates the PARAXCOMP function for an axis that was defined in both functions. When you deactivate PARAXMODE, the PARAXcomp function becomes active again.

Use the **PARAXMODE** function to define the axes the TNC is to use for machining. You program all traverse movements and contour descriptions in the principal axes X, Y and Z, independent of your machine.

Define the three axes in the **PARAXMODE** function (e.g. **FUNCTION PARAXMODE X Y W**), which the TNC is to use to execute the programmed traverse movements.

Proceed as follows for the definition:

SPEC FCT
- Show the soft-key row with special functions

PROGRAM FUNCTIONS
- Select the menu for defining various plain-language functions

FUNCTION PARAX
- Select **FUNCTION PARAX**

FUNCTION PARAXMODE
- Select **FUNCTION PARAXMODE**

FUNCTION PARAXMODE
- Select **FUNCTION PARAXMODE**
- Define the axes for machining

Move the principal axis and the parallel axis simultaneously

If the **PARAXMODE** function is active, the TNC uses the axes defined in the function to execute the programmed traverse movements. If the TNC is to traverse a parallel axis simultaneously with the associated principal axis, you can identify the respective axis by additionally entering the character "**&**". The axis with the **&** character then refers to the principal axis.

NC block

```
13 FUNCTION PARAXMODE X Y W
14 L Z+100 &Z+150 R0 FMAX
```

> The syntax element "**&**" is only permitted in L blocks.
> Additional positioning of a principal axis with the "**&**" command is done in the REF system. If you have set the position display to "actual value", this movement will not be shown. If necessary, switch the position display to "REF value".

FUNCTION PARAXMODE OFF

Use the **PARAXCOMP OFF** function to switch off the parallel-axis function. The TNC then uses the principal axes defined by the machine manufacturer. Proceed as follows for the definition:

NC block

```
13 FUNCTION PARAXCOMP OFF
```

SPEC FCT
- Show the soft-key row with special functions

PROGRAM FUNCTIONS
- Select the menu for defining various plain-language functions

FUNCTION PARAX
- Select **FUNCTION PARAX**

FUNCTION PARAXMODE
- Select **FUNCTION PARAXMODE**

FUNCTION PARAXMODE OFF
- Select **FUNCTION PARAXMODE OFF**

10.3 File functions

Application

The **FILE FUNCTION** features are used to copy, move and delete files from within the part program.

> You must not use **FILE** functions on programs or files, to which you have previously made reference with functions such as **CALL PGM** or **CYCL DEF 12 PGM CALL**.

Defining file functions

SPEC FCT
- Press the special functions key

PROGRAM FUNCTIONS
- Select the program functions

FUNCTION FILE
- Select the file functions: The TNC displays the available functions

Function	Meaning	Soft key
FILE COPY	Copy file: Enter the name and path of the file to be copied, as well as the target path.	FILE COPY
FILE MOVE	Move file: Enter the name and path of the file to be moved, as well as the target path.	FILE MOVE
FILE DELETE	Delete file: Enter the path and name of the file to be deleted	FILE DELETE

10.4 Definition of a datum shift

Overview

As an alternative to the coordinate transformation Cycle 7 **DATUM SHIFT,** you can use the **TRANS DATUM** plain-language function. Just as in Cycle 7, you can use **TRANS DATUM** to directly program shift values or activate a line from a selectable datum table. In addition, there is also the **TRANS DATUM RESET** function, which you can easily use to reset a datum shift.

TRANS DATUM AXIS

You can define a datum shift by entering values in the respective axes with the **TRANS DATUM AXIS** function. You can define up to nine coordinates in one block, and incremental entries are possible. Proceed as follows for the definition:

NC block

```
13 TRANS DATUMAXIS X+10 Y+25 Z+42
```

SPEC FCT
- Show the soft-key row with special functions

PROGRAM FUNCTIONS
- Select the menu for defining various plain-language functions

TRANSFORM
- Select transformations

TRANS DATUM
- Select datum shifting with **TRANS DATUM**

VALUES
- Select the value input soft key
- Enter the datum shift in the affected axes, confirming with the ENT key each time

Values entered as absolute values refer to the workpiece datum, which is specified either by datum setting or with a preset from the preset table.

Incremental values always refer to the datum which was last valid (this may be a datum which has already been shifted).

TRANS DATUM TABLE

You can define a datum shift by selecting a datum number from a datum table with the **TRANS DATUM TABLE** function. Proceed as follows for the definition:

NC block

```
13 TRANS DATUMTABLE TABLINE25
```

- Show the soft-key row with special functions

- Select the menu for defining various plain-language functions

- Select transformations

- Select datum shifting with **TRANS DATUM**

- Press the arrow key to move to **TRANS AXIS**

- Select datum shifting with **TRANS DATUM TABLE**
- If desired, enter the name of the datum table from which you want to activate the datum number, and confirm with the ENT key. If you do not want to define a datum table, confirm with the NO ENT key
- Enter the line number to be activated by the TNC, and confirm with the ENT key

If you did not define a datum table in the **TRANS DATUM TABLE** block, then the TNC uses the datum table already selected in the NC program with **SEL TABLE,** or the datum table with status M selected in one of the Program Run modes.

TRANS DATUM RESET

Use the **TRANS DATUM RESET** function to cancel a datum shift. How you previously defined the datum is irrelevant. Proceed as follows for the definition:

NC block

```
13 TRANS DATUM RESET
```

SPEC FCT

- Show the soft-key row with special functions

PROGRAM FUNCTIONS

- Select the menu for defining various plain-language functions

TRANSFORM

- Select transformations

TRANS DATUM

- Select datum shifting with **TRANS DATUM**

←

- Press the arrow key to move to **TRANS AXIS**

RESET DATUM SHIFT

- Select the **TRANS DATUM RESET** datum shift

10.5 Creating Text Files

Application

You can use the TNC's text editor to write and edit texts. Typical applications:

- Recording test results
- Documenting working procedures
- Creating formula collections

Text files are type .A files (ASCII files). If you want to edit other types of files, you must first convert them into type .A files.

Opening and exiting text files

- Select the Programming and Editing mode of operation
- Call the file manager: Press the PGM MGT key
- Display type .A files: Press the SELECT TYPE and then the SHOW .A soft keys
- Select a file and open it with the SELECT soft key or ENT key, or create a new file by entering the new file name and confirming your entry with the ENT key

To leave the text editor, call the file manager and select a file of a different file type, for example a part program

Cursor movements	Soft key
Move cursor one word to the right	MOVE WORD →
Move cursor one word to the left	MOVE WORD ←
Go to next screen page	PAGE ↓
Go to previous screen page	PAGE ↑
Go to beginning of file	BEGIN ↑
Go to end of file	END ↓

Editing texts

Above the first line of the text editor, there is an information field showing the file name, location and line information:

File: Name of the text file

Line: Line in which the cursor is presently located

Column: Column in which the cursor is presently located

The text is inserted or overwritten at the location of the cursor. You can move the cursor to any desired position in the text file by pressing the arrow keys.

The line in which the cursor is presently located is depicted in a different color. You can insert a line break with the Return or ENT key.

Deleting and re-inserting characters, words and lines

With the text editor, you can erase words and even lines, and insert them at any desired location in the text.

- Move the cursor to the word or line that you wish to erase and insert at a different place in the text
- Press the DELETE WORD or DELETE LINE soft key. The text is placed in the buffer memory
- Move the cursor to the location where you wish to insert the text, and press the RESTORE LINE/WORD soft key

Function	Soft key
Delete and temporarily store a line	DELETE LINE
Delete and temporarily store a word	DELETE WORD
Delete and temporarily store a character	DELETE CHAR
Insert a line or word from temporary storage	INSERT LINE / WORD

Editing text blocks

You can copy and erase text blocks of any size, and insert them at other locations. Before any of these actions, you must first select the desired text block:

- To select a text block, move the cursor to the first character of the text you wish to select

SELECT BLOCK

- Press the SELECT BLOCK soft key
- Move the cursor to the last character of the text you wish to select. You can select whole lines by moving the cursor up or down directly with the arrow keys—the selected text is shown in a different color

After selecting the desired text block, you can edit the text with the following soft keys:

Function	Soft key
Delete the selected block and store temporarily	CUT OUT BLOCK
Store the selected block temporarily without erasing (copy)	INSERT BLOCK

If desired, you can now insert the temporarily stored block at a different location:

- Move the cursor to the location where you want to insert the temporarily stored text block

INSERT BLOCK

- Press the INSERT BLOCK soft key for the text block to be inserted

You can insert the temporarily stored text block as often as desired

Transferring the selected block to a different file

- Select the text block as described previously

APPEND TO FILE

- Press the APPEND TO FILE soft key. The TNC displays the dialog prompt **Destination file =**
- Enter the path and name of the destination file. The TNC appends the selected text to the specified file. If no target file with the specified name is found, the TNC creates a new file with the selected text.

Inserting another file at the cursor position

- Move the cursor to the location in the text where you wish to insert another file

READ FILE

- Press the READ FILE soft key. The TNC displays the dialog prompt **File name =**
- Enter the path and name of the file you want to insert

Finding text sections

With the text editor, you can search for words or character strings in a text. Two functions are available:

Finding the current text

The search function is used for finding the next occurrence of the word in which the cursor is presently located:

- Move the cursor to the desired word.
- Select the search function: Press the FIND soft key
- Press the FIND CURRENT WORD soft key
- Exit the search function: Press the END soft key

Finding any text

- Select the search function: Press the FIND soft key. The TNC displays the dialog prompt **Find text:**
- Enter the text that you wish to find
- Find the text: Press the EXECUTE soft key
- Exit the search function: Press the END soft key

10.6 Freely definable tables

Fundamentals

In freely definable tables you can read and save any information from the NC program. The Q parameter functions **FN 26** to **FN 28** are provided for this purpose.

You can change the format of freely definable tables, i.e. the columns and their properties, by using the structure editor. They enable you to make tables that are exactly tailored to your application.

You can also switch between table view (default setting) and form view.

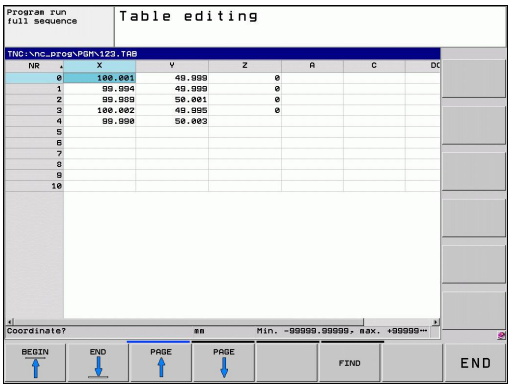

Creating a freely definable table

- To call the file manager, press the PGM MGT key
- Enter any file name with the .TAB extension and confirm with the ENT key. The TNC displays a pop-up window with permanently saved table formats
- Use the arrow key to select the table template **EXAMPLE.TAB** and confirm with the ENT key. The TNC opens a new table in the predefined format
- To adapt the table to your requirements you have to edit the table format, See "Editing the table format", page 342

Machine tool builders may define their own table templates and save them in the TNC. When you create a new table, the TNC opens a pop-up window listing all available table templates.

You can also save your own table templates in the TNC. To do this, you create a new table, change the table format and save the table in the **TNC:\system \proto** directory. Then your template will also be available in the list box for table templates when you create a new table.

Editing the table format

- Press the EDIT FORMAT soft key (2nd soft-key level): The TNC opens the editor form, in which the table structure is shown. The meanings of the structure commands (header entries) are shown in the following table.

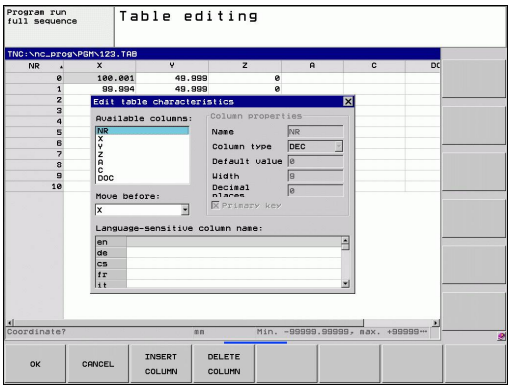

Structure command	Meaning
Available columns:	List of all columns contained in the table
Move before:	The entry highlighted in **Available columns** is moved in front of this column
Name	Column name: Is displayed in the header
Column type	**TEXT**: Text entry **SIGN**: Sign + or - **BIN**: Binary number **DEC**: Decimal, positive, complete number (cardinal number) **HEX**: Hexadecimal number **INT**: Complete number **LENGTH**: Length (is converted in inch programs) **FEED**: Feed rate (mm/min or 0.1 inch/min) **IFEED**: Feed rate (mm/min or inch/min) **FLOAT**: Floating-point number **BOOL**: Logical value **INDEX**: Index **TSTAMP**: Fixed format for date and time
Default value	Default value for the fields in this column
Width	Width of the column (number of characters)
Primary key	First table column
Language-sensitive column name	Language-sensitive dialogs

You can use a connected mouse or the TNC keyboard to navigate in the form. Navigation using the TNC keyboard:

- Press the navigation keys to go to the input fields. Use the arrow keys to navigate within an input field. To open pop-down menus, press the GOTO key.

> In a table that already has lines, you cannot change the table properties **Name** and **Column type**. Once you have deleted all lines, you can change these properties. If required, create a backup copy of the table beforehand.

Exiting the structure editor

- Press the OK soft key The TNC closes the editor form and applies the changes. All changes are discarded by pressing the CANCEL soft key.

Switching between table and form view

All tables with the file extension **.TAB** can be opened in either list view or form view.

- Press the key for setting the screen layout. Select the respective soft key for list view or form view (form view: with or without dialog texts)

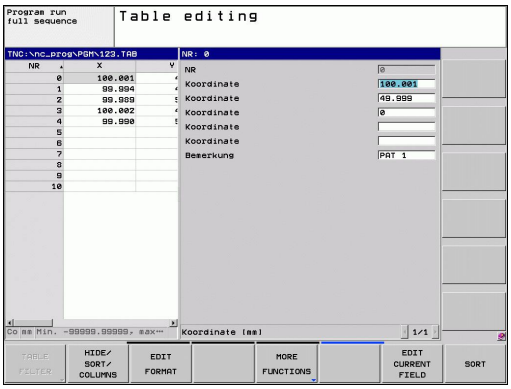

In the form view the TNC lists the line numbers with the contents of the first column in the left half of the screen.

In the right half you can change the data.

- Press the ENT key or the arrow key to move to the next input field.
- To select another line, press the green navigation key (folder symbol). This moves the cursor to the left window, and you can select the desired line with the arrow keys. Press the green navigation key to switch back to the input window.

FN 26: TAPOPEN: Open a freely definable table

With the function **FN 26: TABOPEN** you open a freely definable table to be written to with **FN 27** or to be read from with **FN 28**.

Only one table can be open in an NC program. A new block with **TABOPEN** automatically closes the last opened table.

The table to be opened must have the file name extension .TAB.

Example: Open the table TAB1.TAB, which is saved in the directory TNC:\DIR1.

```
56 FN 26: TABOPEN TNC:\DIR1\TAB1.TAB
```

FN 27: TAPWRITE: Write to a freely definable table

After you have opened a table with **FN 26: TABOPEN** you can use the function **FN 27: TABWRITE** to write to it.

You can define and write to several column names in a **TABWRITE** block. The column names must be written between quotation marks and separated by a comma. You define the values that the TNC is to write to the respective column with Q parameters.

Note that by default the **FN 27: TABWRITE** function writes values to the currently open table also in the Test Run mode. The **FN18 ID992 NR16** function enables you to query in which operating mode the program is to be run. If the **FN27** function is to be run only in the Program Run operating modes, you can skip the respective program section by using a jump command If-then decisions with Q parameters.

You can write only to numerical table fields.

If you wish to write to more than one column in a block, you must save the values under successive Q parameter numbers.

Example

You wish to write to the columns "Radius," "Depth" and "D" in line 5 of the presently opened table. The values to be written to the table must be saved in the Q parameters Q5, Q6 and Q7.

```
53 Q5 = 3.75
54 Q6 = -5
55 Q7 = 7.5
56 FN 27: TABWRITE 5/“RADIUS,DEPTH,D“ = Q5
```

FN 28: TAPREAD: Read from a freely definable table

After you have opened a table with **FN 26: TABOPEN** you can use the function **FN 28: TABREAD** to read from it.

You can define and read several column names in a **TABREAD** block. The column names must be written between quotation marks and separated by a comma. In the **FN 28** block you can define the Q parameter number in which the TNC is to write the value that is first read.

> You can read only numerical table fields.
>
> If you wish to read from more than one column in a block, the TNC will save the values under successive Q parameter numbers.

Example

You wish to read the values of the columns "Radius," "Depth" and "D" from line 6 of the presently opened table. Save the first value in Q parameter Q10 (second value in Q11, third value in Q12).

```
56 FN 28: TABREAD Q10 = 6/"RADIUS,DEPTH,D"
```

11

Programming: Multiple Axis Machining

11.1 Functions for multiple axis machining

The TNC functions for multiple axis machining are described in this chapter.

TNC function	Description	Page
PLANE	Define machining in the tilted working plane	349
M116	Feed rate of rotary axes	370
M126	Shortest-path traverse of rotary axes	371
M94	Reduce display value of rotary axes	372
M138	Selection of tilted axes	373

11.2 The PLANE Function: Tilting the Working Plane (Software Option 1)

Introduction

The machine manufacturer must enable the functions for tilting the working plane!

You can only use the **PLANE** function in its entirety on machines which have at least two rotary axes (head and/or table). Exception: **PLANE AXIAL** can also be used if only a single rotary axis is present or active on your machine.

The **PLANE** function is a powerful function for defining tilted working planes in various manners.

All **PLANE** functions available on the TNC describe the desired working plane independently of the rotary axes actually present on your machine. The following possibilities are available:

Function	Required parameters	Soft key	Page
SPATIAL	Three spatial angles: **SPA**, **SPB**, and **SPC**	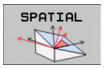	353
PROJECTED	Two projection angles: **PROPR** and **PROMIN** and a rotation angle **ROT**	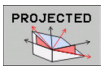	355
EULER	Three Euler angles: precession **(EULPR),** nutation **(EULNU)** and rotation **(EULROT)**	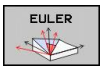	356
VECTOR	Normal vector for defining the plane and base vector for defining the direction of the tilted X axis	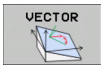	358

Function	Required parameters	Soft key	Page
POINTS	Coordinates of any three points in the plane to be tilted	POINTS	360
RELATIV	Single, incrementally effective spatial angle	REL. SPA.	362
AXIAL	Up to three absolute or incremental axis angles **A,B,C**	AXIAL	363
RESET	Reset the PLANE function	RESET	352

The parameter definition of the **PLANE** function is separated into two parts:

- The geometric definition of the plane, which is different for each of the available **PLANE** functions.
- The positioning behavior of the **PLANE** function, which is independent of the plane definition and is identical for all **PLANE** functions, See "Specifying the positioning behavior of the PLANE function", page 365

The actual-position-capture function is not possible with an active tilted working plane.

If you use the **PLANE** function when **M120** is active, the TNC automatically rescinds the radius compensation, which also rescinds the **M120** function.

Always use **PLANE RESET** to reset **PLANE** functions. Entering 0 in all **PLANE** parameters does not completely reset the function.

If you restrict the number of tilting axes with the **M138** function, your machine may provide only limited tilting possibilities.

You can only use the PLANE functions with tool axis Z.

The TNC only supports tilting the working plane with spindle axis Z.

Defining the PLANE function

SPEC FCT

- Show the soft-key row with special functions

TILT MACHINING PLANE

- Select the **PLANE** function: Press the TILT MACHINING PLANE soft key: The TNC displays the available definition possibilities in the soft-key row

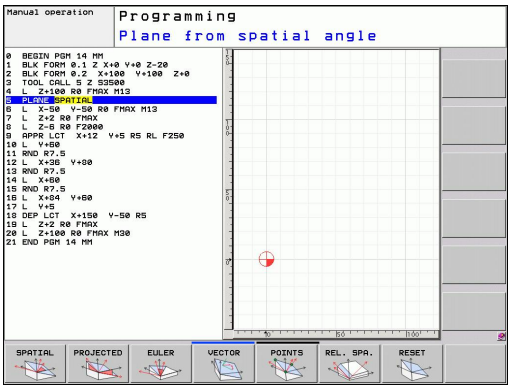

Selecting functions

- Select the desired function by soft key. The TNC continues the dialog and requests the required parameters

Position display

As soon as a **PLANE** function is active, the TNC shows the calculated spatial angle in the additional status display (see figure). As a rule, the TNC internally always calculates with spatial angles, independent of which **PLANE** function is active.

During tilting (**MOVE** or **TURN** mode) in the Distance-To-Go mode (**DIST**), the TNC shows (in the rotary axis) the distance to go (or calculated distance) to the final position of the rotary axis.

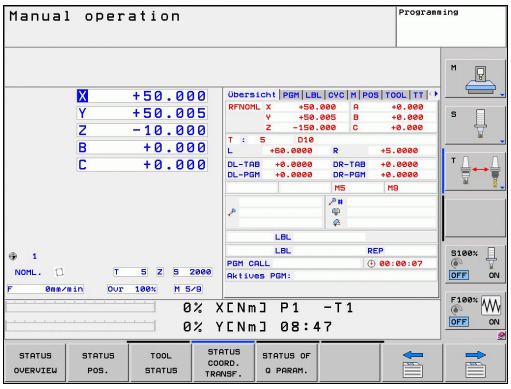

Resetting the PLANE function

SPEC FCT

- Show the soft-key row with special functions

SPECIAL TNC FUNCTIONS

- Select special TNC functions: Press the SPECIAL TNC FUNCT. soft key

TILT MACHINING PLANE

- Select the PLANE function: Press the TILT MACHINING PLANE soft key: The TNC displays the available definition possibilities in the soft-key row

RESET

- Select the Reset function. This internally resets the **PLANE** function, but does not change the current axis positions

MOVE

- Specify whether the TNC should automatically move the rotary axes to the default setting **(MOVE** or **TURN)** or not **(STAY)**See "Automatic positioning: MOVE/TURN/STAY (entry is mandatory)", page 365.

END

- Terminate the entry: Press the END key

NC block

```
25 PLANE RESET MOVE ABST50 F1000
```

The **PLANE RESET** function resets the current **PLANE** function—or an active cycle **19**—completely (angles = 0 and function is inactive). It does not need to be defined more than once.

Defining the working plane with the spatial angle: PLANE SPATIAL

Application

Spatial angles define a working plane using up to three rotations of the coordinate system; two perspectives that have always the same result are available for this purpose.

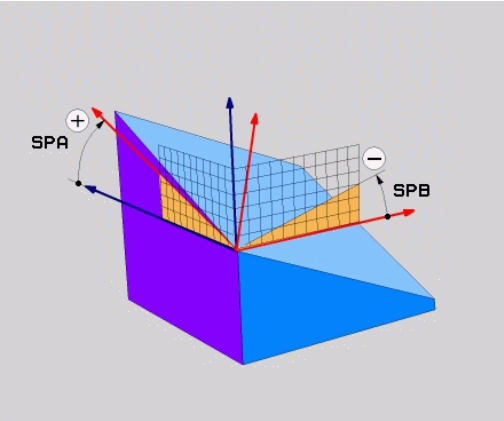

- **Rotations about the machine-based coordinate system:** The sequence of the rotations is first around the machine axis C, then around the machine axis B, and then around the machine axis A.
- **Rotations about the respectively tilted coordinate system:** The sequence of rotations is first around the machine axis C, then around the rotated axis B, and then around the rotated axis A. This perspective is usually easier to understand, because one rotary axis is fixed so that the rotations of the coordinate system are easier to comprehend.

Before programming, note the following

You must always define the three spatial angles **SPA**, **SPB**, and **SPC**, even if one of them = 0.

This operation corresponds to Cycle19 if the entries in Cycle 19 are defined as spatial angles on the machine side.

Parameter description for the positioning behavior: See "Specifying the positioning behavior of the PLANE function", page 365.

Input parameters

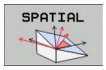

- **Spatial angle A?**: Rotational angle **SPA** around the fixed machine axis X (see figure at top right). Input range from –359.9999° to +359.9999°
- **Spatial angle B?**: Rotational angle **SPB** around the fixed machine axis Y (see figure at top right). Input range from –359.9999° to +359.9999°
- **Spatial angle C?**: Rotational angle **SPC** around the fixed machine axis Z (see figure at center right). Input range from –359.9999° to +359.9999°
- Continue with the positioning properties, See "Specifying the positioning behavior of the PLANE function", page 365

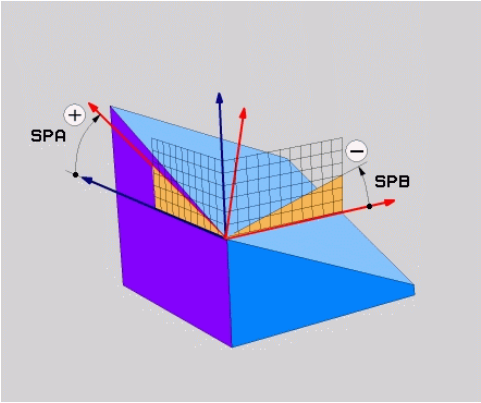

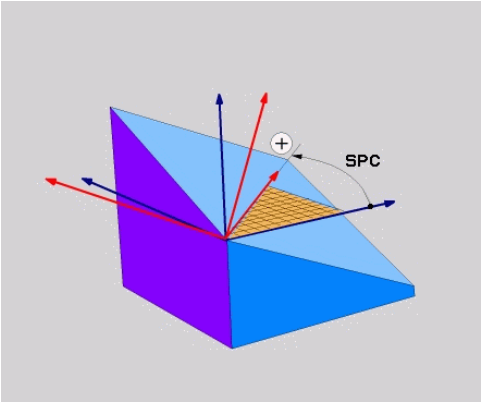

Abbreviations used

Abbreviation	Meaning
SPATIAL	In space
SPA	**Sp**atial **A**: Rotation around the X axis
SPB	**Sp**atial **B**: Rotation around the Y axis
SPC	**Sp**atial **C**: Rotation around the Z axis

NC block

```
5 PLANE SPATIAL SPA+27 SPB+0 SPC
+45 .....
```

Defining the working plane with the projection angle: PLANE PROJECTED

Application

Projection angles define a machining plane through the entry of two angles that you determine by projecting the first coordinate plane (Z/X plane with tool axis Z) and the second coordinate plane (Y/Z with tool axis Z) onto the machining plane to be defined.

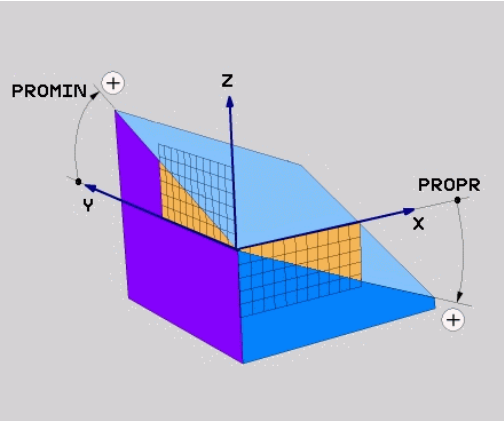

Before programming, note the following

You can only use projection angles if the angle definitions are given with respect to a rectangular cuboid. Otherwise there will be deformations on the workpiece.

Parameter description for the positioning behavior: See "Specifying the positioning behavior of the PLANE function", page 365.

Input parameters

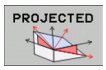

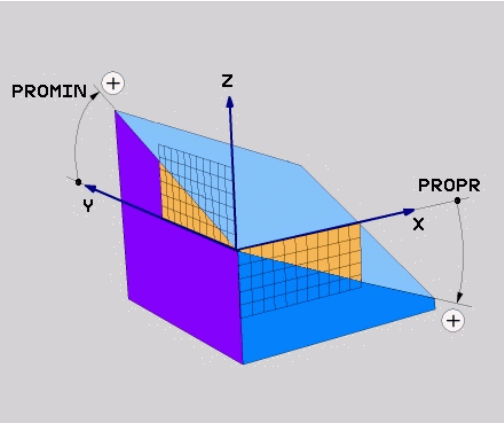

- **Proj. angle 1st coordinate plane?**: Projected angle of the tilted machining plane in the 1st coordinate plane of the fixed machine coordinate system (Z/X for tool axis Z, see figure at top right). Input range: from –89.9999° to +89.9999°. The 0° axis is the principal axis of the active working plane (X for tool axis Z. See figure at top right for positive direction)
- **Proj. angle 2nd coordinate plane?**: Projected angle in the 2nd coordinate plane of the fixed machine coordinate system (Y/Z for tool axis Z, see figure at top right). Input range from –89.9999° to +89.9999°. The 0° axis is the minor axis of the active machining plane (Y for tool axis Z)

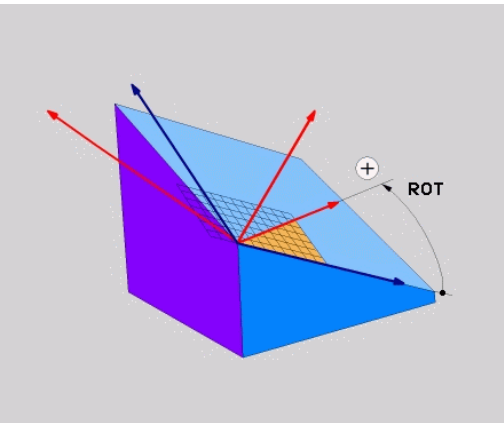

- **ROT angle of the tilted plane?**: Rotation of the tilted coordinate system around the tilted tool axis (corresponds to a rotation with Cycle 10 ROTATION). The rotation angle is used to simply specify the direction of the principal axis of the working plane (X for tool axis Z, Z for tool axis Y; see figure at bottom right). Input range: –360° to +360°
- Continue with the positioning properties, See "Specifying the positioning behavior of the PLANE function", page 365

NC block

```
5 PLANE PROJECTED PROPR+24 PROMIN+24 PROROT+30 .....
```

Abbreviations used:

PROJECTED	Projected
PROPR	Principle plane
PROMIN	Minor plane
PROMIN	Rotation

Defining the working plane with the Euler angle: PLANE EULER

Application

Euler angles define a machining plane through up to three **rotations about the respectively tilted coordinate system**. The Swiss mathematician Leonhard Euler defined these angles. When applied to the machine coordinate system, they have the following meanings:

Precession angle: **EULPR**	Rotation of the coordinate system around the Z axis
Nutation angle: **EULNU**	Rotation of the coordinate system around the X axis already shifted by the precession angle
Rotation angle: **EULROT**	Rotation of the tilted machining plane around the tilted Z axis

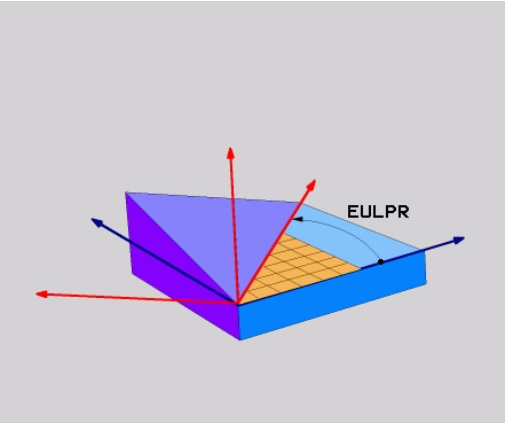

Before programming, note the following

Parameter description for the positioning behavior: See "Specifying the positioning behavior of the PLANE function", page 365.

Input parameters

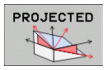

- **Rot. angle main coordinate plane?**: Rotary angle **EULPR** around the Z axis (see figure at top right). Please note:
  - Input range: –180.0000° to +180.0000°
  - The 0° axis is the X axis
- **Swivel angle of tool axis?:** Tilting angle **EULNU** of the coordinate system around the X axis shifted by the precession angle (see figure at center right). Please note:
  - Input range: 0° to +180.0000°
  - The 0° axis is the Z axis
- **ROT angle of the tilted plane?**: Rotation **EULROT** of the tilted coordinate system around the tilted Z axis (corresponds to a rotation with Cycle 10 ROTATION). Use the rotation angle to simply define the direction of the X axis in the tilted machining plane (see figure at bottom right). Please note:
  - Input range: 0° to 360.0000°
  - The 0° axis is the X axis
- Continue with the positioning properties, See "Specifying the positioning behavior of the PLANE function", page 365

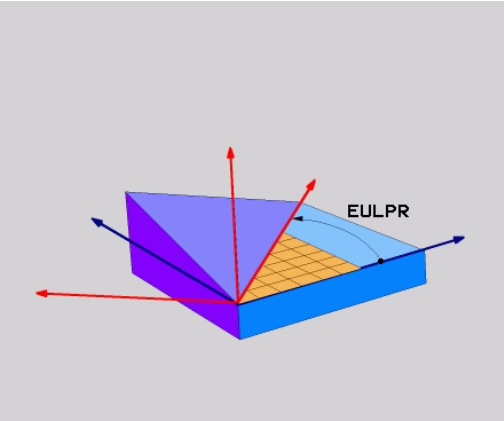

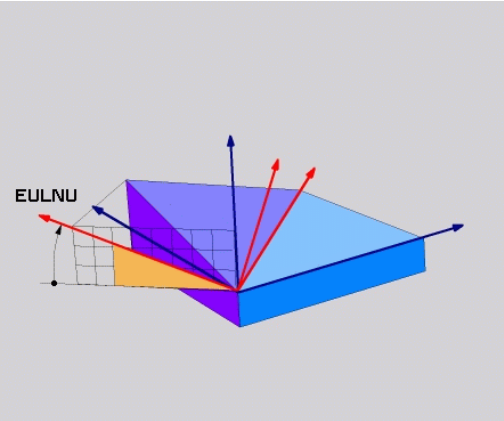

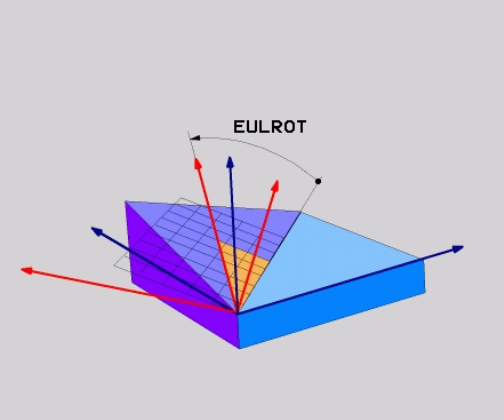

NC block

```
5 PLANE EULER EULPR45 EULNU20 EULROT22 .....
```

Abbreviations used

Abbreviation	Meaning
EULER	Swiss mathematician who defined these angles
EULPR	**Pr**ecession angle: angle describing the rotation of the coordinate system around the Z axis
EULNU	**Nu**tation angle: angle describing the rotation of the coordinate system around the X axis shifted by the precession angle
EULROT	**Rot**ation angle: angle describing the rotation of the tilted machining plane around the tilted Z axis

Defining the working plane with two vectors: PLANE VECTOR

Application

You can use the definition of a working plane via **two vectors** if your CAD system can calculate the base vector and normal vector of the tilted machining plane. A normalized input is not necessary. The TNC calculates the normal, so you can enter values between –9.999999 and +9.999999.

The base vector required for the definition of the machining plane is defined by the components **BX**, **BY** and **BZ** (see figure at right). The normal vector is defined by the components **NX**, **NY** and **NZ**.

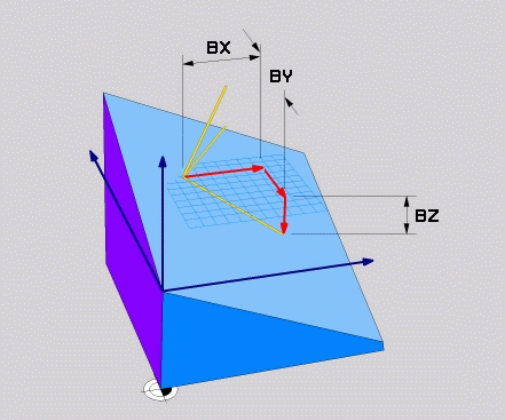

Before programming, note the following

The base vector defines the direction of the principal axis in the tilted machining plane, and the normal vector determines the orientation of the tilted machining plane, and at the same time is perpendicular to it.

The TNC calculates standardized vectors from the values you enter.

Parameter description for the positioning behavior: See "Specifying the positioning behavior of the PLANE function".

Input parameters

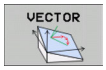

- **X component of base vector?**: X component **BX** of the base vector B (see figure at top right). Input range: –9.9999999 to +9.9999999
- **Y component of base vector?**: Y component **BY** of the base vector B (see figure at top right). Input range: –9.9999999 to +9.9999999
- **Z component of base vector?**: Z component **BZ** of the base vector B (see figure at top right). Input range: –9.9999999 to +9.9999999
- **X component of normal vector?**: X component **NX** of the normal vector N (see figure at center right). Input range: –9.9999999 to +9.9999999
- **Y component of normal vector?**: Y component **NY** of the normal vector N (see figure at center right). Input range: –9.9999999 to +9.9999999
- **Z component of normal vector?**: Z component **NZ** of the normal vector N (see figure at lower right). Input range: –9.9999999 to +9.9999999
- Continue with the positioning properties, See "Specifying the positioning behavior of the PLANE function", page 365

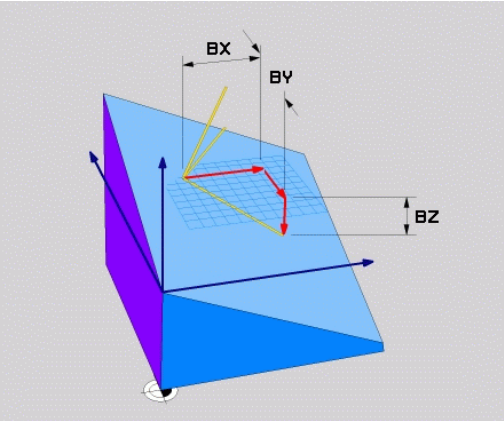

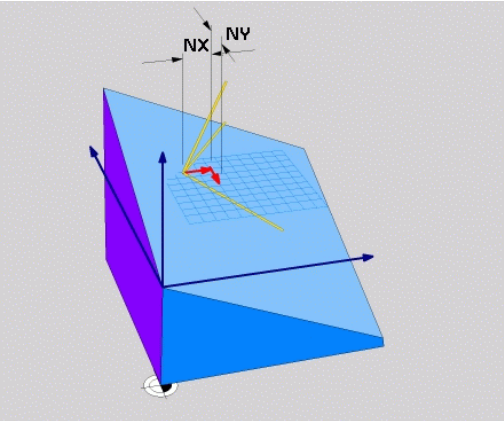

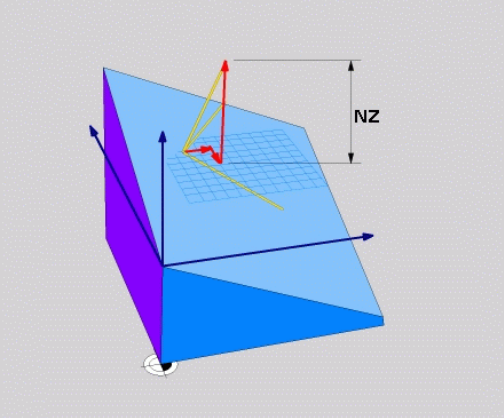

NC block

```
5 PLANE VECTOR BX0.8 BY-0.4 BZ-0.42 NX0.2 NY0.2 NZ0.92 ..
```

Abbreviations used

Abbreviation	Meaning
VECTOR	Vector
BX, BY, BZ	**B**ase vector: **X**, **Y** and **Z** components
NX, NY, NZ	**N**ormal vector: **X**, **Y** and **Z** components

Defining the working plane via three points: PLANE POINTS

Application

A working plane can be uniquely defined by entering **any three points P1 to P3 in this plane**. This possibility is realized in the **PLANE POINTS** function.

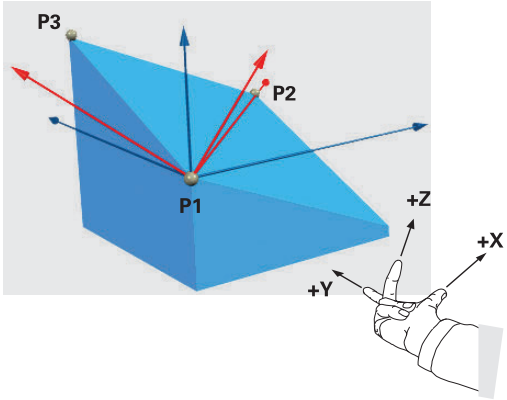

Before programming, note the following

The connection from Point 1 to Point 2 determines the direction of the tilted main axis (X for tool axis Z).

The direction of the tilted tool axis is determined by the position of Point 3 relative to the connecting line between Point 1 and Point 2. Use the right-hand rule (thumb = X axis, index finger = Y axis, middle finger = Z axis (see figure at right)) to remember: thumb (X axis) points from Point 1 to Point 2, index finger (Y axis) points parallel to the tilted Y axis in the direction of Point 3. Then the middle finger points in the direction of the tilted tool axis.

The three points define the slope of the plane. The position of the active datum is not changed by the TNC.

Parameter description for the positioning behavior: See "Specifying the positioning behavior of the PLANE function", page 365.

Input parameters

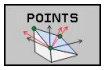

- **X coordinate of 1st plane point?**: X coordinate **P1X** of the 1st plane point (see figure at top right)
- **Y coordinate of 1st plane point?**: Y coordinate **P1Y** of the 1st plane point (see figure at top right)
- **Z coordinate of 1st plane point?**: Z coordinate **P1Z** of the 1st plane point (see figure at top right)
- **X coordinate of 2nd plane point?**: X coordinate **P2X** of the 2nd plane point (see figure at center right)
- **Y coordinate of 2nd plane point?**: Y coordinate **P2Y** of the 2nd plane point (see figure at center right)
- **Z coordinate of 2nd plane point?**: Z coordinate **P2Z** of the 2nd plane point (see figure at center right)
- **X coordinate of 3rd plane point?**: X coordinate **P3X** of the 3rd plane point (see figure at bottom right)
- **Y coordinate of 3rd plane point?**: Y coordinate **P3Y** of the 3rd plane point (see figure at bottom right)
- **Z coordinate of 3rd plane point?**: Z coordinate **P3Z** of the 3rd plane point (see figure at bottom right)
- Continue with the positioning properties See "Positionierverhalten der PLANE-Funktion festlegen"

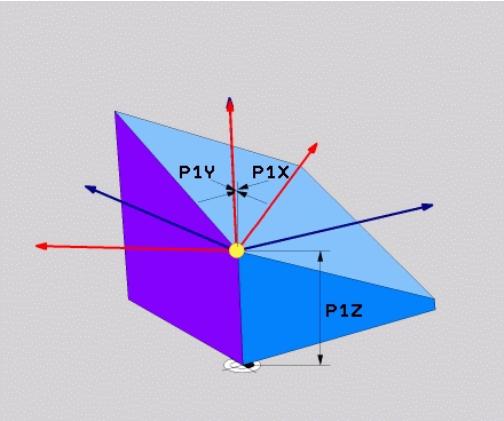

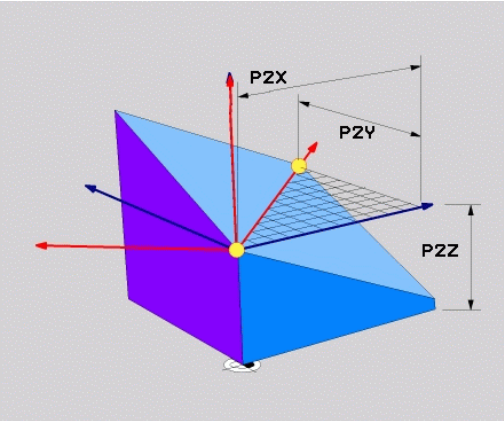

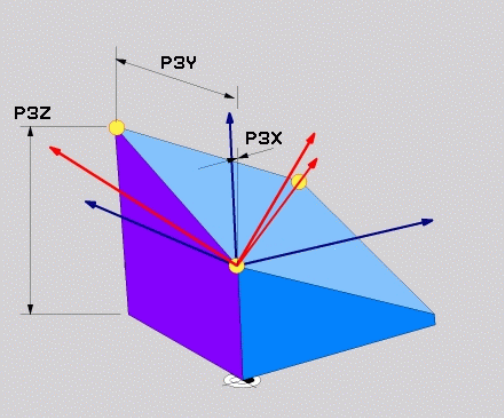

NC block

```
5 PLANE POINTS P1X+0 P1Y+0 P1Z+20 P2X+30 P2Y+31 P2Z+20 P3X
+0 P3Y+41 P3Z+32.5 .....
```

Abbreviations used

Abbreviation	Meaning
POINTS	Points

Defining the working plane via a single incremental spatial angle: PLANE SPATIAL

Application

Use an incremental spatial angle when an already active tilted working plane is to be tilted by **another rotation**. Example: machining a 45° chamfer on a tilted plane.

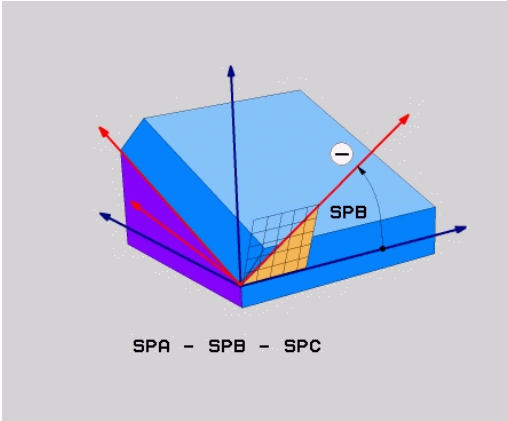

Before programming, note the following

The defined angle is always in effect in respect to the active working plane, regardless of the function you have used to activate it.

You can program any number of **PLANE RELATIVE** functions in a row.

If you want to return to the working plane that was active before the **PLANE RELATIVE** function, define the **PLANE RELATIVE** function again with the same angle but with the opposite algebraic sign.

If you use the **PLANE RELATIVE** function in a non-tilted working plane, then you simply rotate the non-tilted plane about the spatial angle defined in the **PLANE** function.

Parameter description for the positioning behavior: See "Specifying the positioning behavior of the PLANE function", page 365.

Input parameters

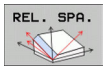

- **Incremental angle?**: Spatial angle about which the active machining plane is to be rotated additionally (see figure at right). Use a soft key to select the axis to be rotated about. Input range: –359.9999° to +359.9999°
- Continue with the positioning properties, See "Specifying the positioning behavior of the PLANE function", page 365

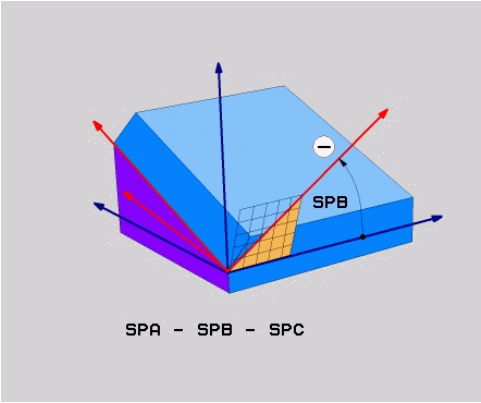

Abbreviations used

Abbreviation	Meaning
RELATIVE	Relative to

NC block

```
5 PLANE RELATIV SPB-45 .....
```

Tilting the working plane through axis angle: PLANE AXIAL (FCL 3 function)

Application

The **PLANE AXIAL** function defines both the position of the working plane and the nominal coordinates of the rotary axes. This function is particularly easy to use on machines with Cartesian coordinates and with kinematics structures in which only one rotary axis is active.

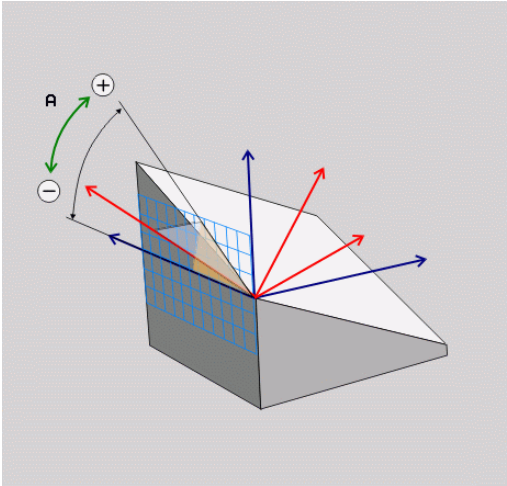

PLANE AXIAL can also be used if you have only one rotary axis active on your machine.

You can use the **PLANE RELATIVE** function after **PLANE AXIAL** if your machine allows spatial angle definitions. Refer to your machine manual.

Before programming, note the following

Enter only axis angles that actually exist on your machine. Otherwise the TNC generates an error message.

Rotary axis coordinates defined with **PLANE AXIAL** are modally effective. Successive definitions therefore build on each other. Incremental input is allowed.

Use **PLANE RESET** to reset the **PLANE AXIAL** function. Resetting by entering 0 does not deactivate **PLANE AXIAL**.

SEQ, **TABLE ROT** and **COORD ROT** have no function in conjunction with **PLANE AXIAL**.

Parameter description for the positioning behavior: See "Specifying the positioning behavior of the PLANE function", page 365.

Input parameters

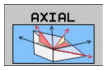

- **Axis angle A?**: Axis angle **to which** the A axis is to be tilted. If entered incrementally, it is the angle **by which** the A axis is to be tilted from its current position. Input range: –99999.9999° to +99999.9999°
- **Axis angle B?**: Axis angle **to which** the B axis is to be tilted. If entered incrementally, it is the angle **by which** the B axis is to be tilted from its current position. Input range: –99999.9999° to +99999.9999°
- **Axis angle C?**: Axis angle **to which** the C axis is to be tilted. If entered incrementally, it is the angle **by which** the C axis is to be tilted from its current position. Input range: –99999.9999° to +99999.9999°
- Continue with the positioning properties, See "Specifying the positioning behavior of the PLANE function", page 365

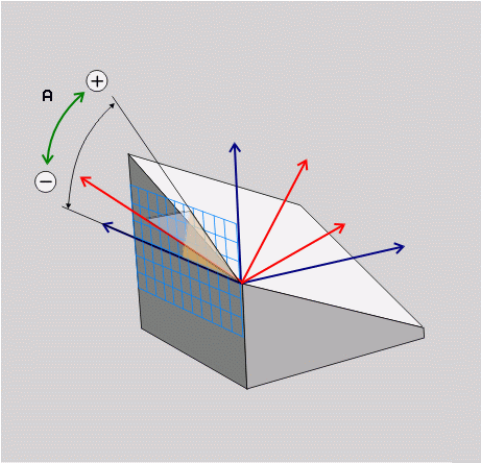

NC block

```
5 PLANE AXIAL B-45 .....
```

Abbreviations used

Abbreviation	Meaning
AXIAL	In the axial direction

Specifying the positioning behavior of the PLANE function

Overview

Independently of which PLANE function you use to define the tilted machining plane, the following functions are always available for the positioning behavior:

- Automatic positioning
- Selection of alternate tilting possibilities (not with **PLANE AXIAL**)
- Selection of the type of transformation (not with **PLANE AXIAL**)

Automatic positioning: MOVE/TURN/STAY (entry is mandatory)

After you have entered all parameters for the plane definition, you must specify how the rotary axes will be positioned to the calculated axis values:

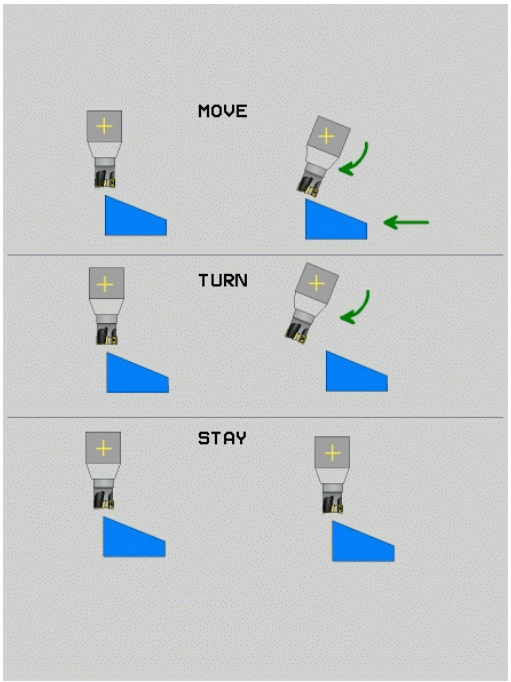

MOVE

- The PLANE function is to automatically position the rotary axes to the calculated position values. The position of the tool relative to the workpiece is to remain the same. The TNC carries out a compensation movement in the linear axes

TURN

- The PLANE function is to automatically position the rotary axes to the calculated position values, but only the rotary axes are positioned. The TNC does **not** carry out a compensation movement in the linear axes

STAY

- You will position the rotary axes later in a separate positioning block

If you have selected the **MOVE** option (**PLANE** function is to position the axes automatically), the following two parameters must still be defined: **Dist. tool tip - center of rot.** and **Feed rate? F=**.

If you have selected the **TURN** option (**PLANE** function is to position the axes automatically without any compensating movement), the following parameter must still be defined: **Feed rate? F=**.

As an alternative to defining a feed rate **F** directly by numerical value, you can also position with **FMAX** (rapid traverse) or **FAUTO** (feed rate from the **TOOL CALLT** block).

> ⇨ If you use **PLANE AXIAL** together with **STAY,** you have to position the rotary axes in a separated block after the **PLANE** function.

- **Dist. tool tip - center of rot.** (incremental): The TNC tilts the tool (or table) relative to the tool tip. The **DIST** parameter shifts the center of rotation of the positioning movement relative to the current position of the tool tip.

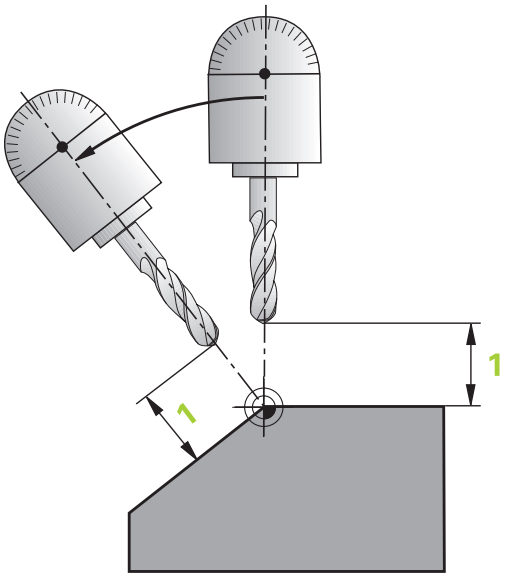

> **Note:**
> - If the tool is already at the given distance to the workpiece before positioning, then relatively speaking the tool is at the same position after positioning (see figure at center right, 1 = DIST).
> - If the tool is not at the given distance to the workpiece before positioning, then relatively speaking the tool is offset from the original position after positioning (see figure at bottom right, 1=DIST).

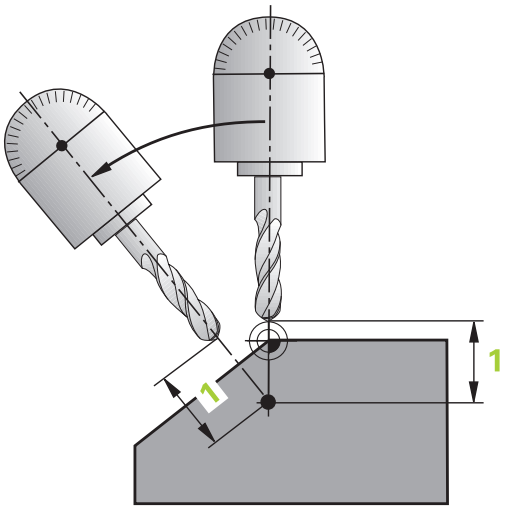

- **Feed rate? F=**: Contour speed at which the tool should be positioned
- **Retraction length in the tool axis?**: Retraction path **MB** is effective incrementally from the current tool position in the active tool axis direction that the TNC approaches **before tilting**. **MB MAX** positions the tool just before the software limit switch.

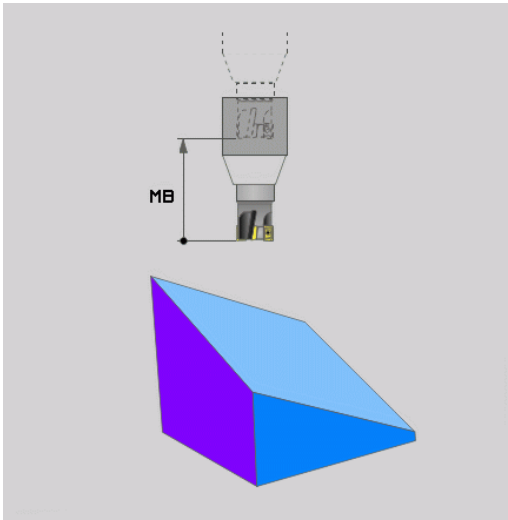

Positioning the rotary axes in a separate block

Proceed as follows if you want to position the rotary axes in a separate positioning block (option **STAY** selected):

> **Danger of collision!**
> Pre-position the tool to a position where there is no danger of collision with the workpiece (clamping devices) during positioning.

- Select any **PLANE** function, and define automatic positioning with the **STAY** option. During program execution the TNC calculates the position values of the rotary axes present on the machine, and stores them in the system parameters Q120 (A axis), Q121 (B axis) and Q122 (C axis)
- Define the positioning block with the angular values calculated by the TNC

NC example blocks: Position a machine with a rotary table C and a tilting table A to a space angle of B+45°

...	
12 L Z+250 R0 FMAX	Position at clearance height
13 PLANE SPATIAL SPA+0 SPB+45 SPC+0 STAY	Define and activate the PLANE function
14 L A+Q120 C+Q122 F2000	Position the rotary axis with the values calculated by the TNC
...	Define machining in the tilted working plane

Selection of alternate tilting possibilities: SEQ +/– (entry optional)

The position you define for the working plane is used by the TNC to calculate the appropriate positioning of the rotary axes present on the machine. In general there are always two solution possibilities.

Use the **SEQ** switch to specify which possibility the TNC should use:

- **SEQ+** positions the master axis so that it assumes a positive angle. The master axis is the 1st rotary axis from the tool, or the last rotary axis from the table (depending on the machine configuration (see figure at top right)).
- **SEQ-** positions the master axis so that it assumes a negative angle.

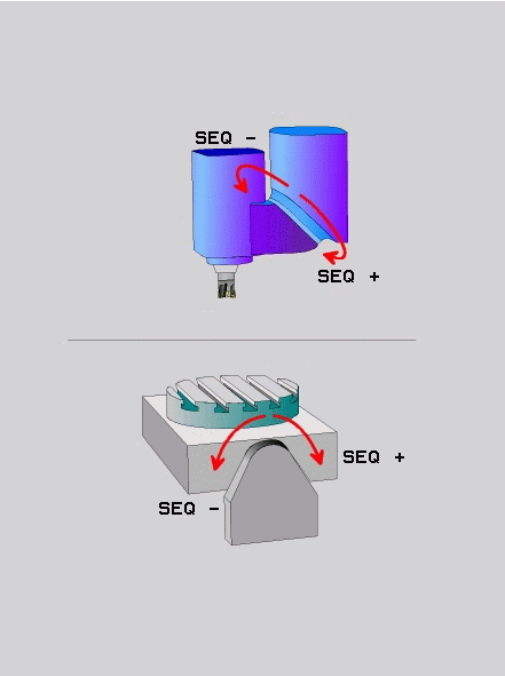

If the solution you chose with **SEQ** is not within the machine's range of traverse, the TNC displays the **Entered angle not permitted** error message.

> **!** When the **PLANE AXIS** function is used, the **SEQ** switch is nonfunctional.

1. The TNC first checks whether both solution possibilities are within the traverse range of the rotary axes.
2. If they are, then the TNC selects the shortest possible solution.
3. If only one solution is within the traverse range, the TNC selects this solution
4. If neither solution is within the traverse range, the TNC displays the **Entered angle not permitted** error message.

If you do not define **SEQ**, the TNC determines the solution as follows:

Example for a machine with a rotary table C and a tilting table
A. Programmed function: PLANE SPATIAL SPA+0 SPB+45 SPC+0

Limit switch	Starting position	SEQ	Resulting axis position
None	A+0, C+0	not prog.	A+45, C+90
None	A+0, C+0	+	A+45, C+90
None	A+0, C+0	–	A–45, C–90
None	A+0, C–105	not prog.	A–45, C–90
None	A+0, C–105	+	A+45, C+90
None	A+0, C–105	–	A–45, C–90
–90 < A < +10	A+0, C+0	not prog.	A–45, C–90
–90 < A < +10	A+0, C+0	+	Error message
None	A+0, C–135	+	A+45, C+90

Selecting the type of transformation (entry optional)

On machines with C-rotary tables, a function is available for specifying the type of transformation:

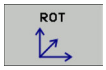

- **COORD ROT** specifies that the PLANE function should only rotate the coordinate system to the defined tilting angle. The rotary table is not moved; the compensation is purely mathematical.

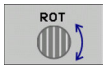

- **TABLE ROT** specifies that the PLANE function should position the rotary table to the defined tilting angle. Compensation results from rotating the workpiece.

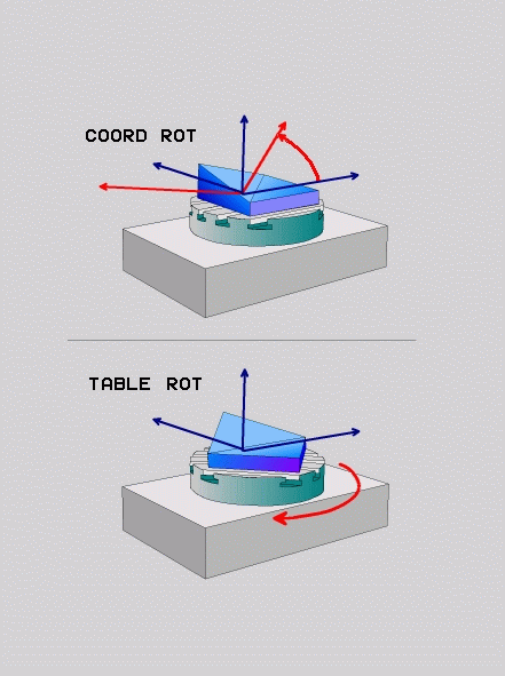

! When the **PLANE AXIAL** function is used, **COORD ROT** and **TABLE ROT** are nonfunctional.

If you use the **TABLE ROT** function in conjunction with a basic rotation and a tilting angle of 0, then the TNC tilts the table to the angle defined in the basic rotation.

11.3 Miscellaneous functions for rotary axes

Feed rate in mm/min on rotary axes A, B, C: M116 (software option 1)

Standard behavior

The TNC interprets the programmed feed rate of a rotary axis in degrees/min (in mm programs and also in inch programs). The feed rate therefore depends on the distance from the tool center to the center of axis rotation.

The larger this distance becomes, the greater the contouring feed rate.

Feed rate in mm/min on rotary axes with M116

The machine geometry must be specified by the machine tool builder in the description of kinematics.

M116 works only on rotary tables. M116 cannot be used with swivel heads. If your machine is equipped with a table/head combination, the TNC ignores the swivel-head rotary axes.

M116 is also effective in an active tilted working plane and in combination with M128 if you used the **M138** function to select rotary axes, See "Selecting tilting axes: M138". Then **M116** affects only those rotary axes that were not selected with **M138**.

The TNC interprets the programmed feed rate of a rotary axis in degrees/min (or 1/10 inch/min). In this case, the TNC calculates the feed for the block at the start of each block. With a rotary axis, the feed rate is not changed during execution of the block even if the tool moves toward the center of the rotary axis.

Effect

M116 is effective in the working plane. To reset M116, enter M117. M116 is also canceled at the end of the program.

M116 becomes effective at the start of block.

Shortest-path traverse of rotary axes: M126

Standard behavior

The behavior of the TNC when positioning the rotary axes depends on the machine tool. Refer to your machine manual.

The standard behavior of the TNC while positioning rotary axes whose display has been reduced to values less than 360° is dependent on machine parameter **shortestDistance** (300401). This machine parameter defines whether the TNC should consider the difference between nominal and actual position, or whether it should always (even without M126) choose the shortest path to the programmed position. Examples:

Actual position	Nominal position	Traverse
350°	10°	–340°
10°	340°	+330°

Behavior with M126

With M126, the TNC will move the axis on the shorter path of traverse for rotary axes whose display is reduced to values less than 360°. Examples:

Actual position	Nominal position	Traverse
350°	10°	+20°
10°	340°	–30°

Effect

M126 becomes effective at the start of block.

To cancel M126, enter M127. At the end of program, M126 is automatically canceled.

Reducing display of a rotary axis to a value less than 360°: M94

Standard behavior

The TNC moves the tool from the current angular value to the programmed angular value.

Example:

Current angular value:	538°
Programmed angular value:	180°
Actual distance of traverse:	-358°

Behavior with M94

At the start of block, the TNC first reduces the current angular value to a value less than 360° and then moves the tool to the programmed value. If several rotary axes are active, M94 will reduce the display of all rotary axes. As an alternative you can enter a rotary axis after M94. The TNC then reduces the display only of this axis.

Example NC blocks

To reduce display of all active rotary axes:

```
L M94
```

To reduce display of the C axis only:

```
L M94 C
```

To reduce display of all active rotary axes and then move the tool in the C axis to the programmed value:

```
L C+180 FMAX M94
```

Effect

M94 is effective only in the block in which it is programmed.

M94 becomes effective at the start of block.

Selecting tilting axes: M138

Standard behavior

The TNC performs M128 and TCPM, and tilts the working plane, only in those axes for which the machine tool builder has set the appropriate machine parameters.

Behavior with M138

The TNC performs the above functions only in those tilting axes that you have defined using M138.

> If you restrict the number of tilting axes with the **M138** function, your machine may provide only limited tilting possibilities.

Effect

M138 becomes effective at the start of block.

You can reset M138 by reprogramming it without entering any axes.

Example NC blocks

Perform the above-mentioned functions only in the tilting axis C:

```
L Z+100 R0 FMAX M138 C
```

12

Manual operation and setup

12.1 Switch-on, switch-off

Switch-on

Switch-on and crossing over the reference points can vary depending on the machine tool.

Refer to your machine manual.

Switch on the power supply for TNC and machine. The TNC then displays the following dialog:

SYSTEM STARTUP

- TNC is started

POWER INTERRUPTED

CE

- TNC message that the power was interrupted—clear the message

COMPILE A PLC PROGRAM

- The PLC program of the TNC is automatically compiled

RELAY EXT. DC VOLTAGE MISSING

I

- Switch on external dc voltage. The TNC checks the functioning of the EMERGENCY STOP circuit

MANUAL OPERATION
TRAVERSE REFERENCE POINTS

I

- Cross the reference points manually in the displayed sequence: For each axis press the machine START button, or

X

Y

- Cross the reference points in any sequence: Press and hold the machine axis direction button for each axis until the reference point has been traversed

If your machine is equipped with absolute encoders, you can leave out crossing the reference marks. In such a case, the TNC is ready for operation immediately after the machine control voltage is switched on.

The TNC is now ready for operation in the Manual Operation mode.

The reference points need only be crossed if the machine axes are to be moved. If you intend only to edit or test programs, you can select the Programming and Editing or Test Run modes of operation immediately after switching on the control voltage.

You can cross the reference points later. by pressing the PASS OVER REFERENCE soft key in the Manual Operation mode.

Crossing the reference point in a tilted working plane

Danger of collision!

Make sure that the angle values entered in the menu for tilting the working plane match the actual angles of the tilted axis.

Deactivate the "Tilt Working Plane" function before you cross the reference points. Take care that there is no collision. Retract the tool from the current position first, if necessary.

The TNC automatically activates the tilted working plane if this function was enabled when the control was switched off. Then the TNC moves the axes in the tilted coordinate system when an axis-direction key is pressed. Position the tool in such a way that a collision is excluded during the subsequent crossing of the reference points. To cross the reference points you have to deactivate the "Tilt Working Plane" function, See "To activate manual tilting:", page 427.

If you use this function, then for non-absolute encoders you must confirm the positions of the rotary axes, which the TNC displays in a pop-up window. The position displayed is the last active position of the rotary axes before switch-off.

If one of the two functions that were active before is active now, the NC START button has no function. The TNC outputs a corresponding error message.

Switch-off

To prevent data from being lost at switch-off, you need to shut down the operating system of the TNC as follows:

- Select the Manual Operation mode

- Select the function for shutting down, confirm again with the YES soft key
- When the TNC displays the message **NOW IT IS SAFE TO TURN POWER OFF** in a pop-up window, you may cut off the power supply to the TNC

Caution: Data may be lost!

Inappropriate switch-off of the TNC can lead to data loss!

Remember that pressing the END key after the control has been shut down restarts the control. Switch-off during a restart can also result in data loss!

12.2 Moving the machine axes

Note

Traversing with the machine axis direction buttons can vary depending on the machine tool. Refer to your machine manual.

Moving the axis with the machine axis direction buttons

- Select the Manual Operation mode
- Press the machine axis direction button and hold it as long as you wish the axis to move, or
- Move the axis continuously: Press and hold the machine axis direction button, then press the machine START button
- To stop the axis, press the machine STOP button.

You can move several axes at a time with these two methods. You can change the feed rate at which the axes are traversed with the F soft key, See "Spindle speed S, feed rate F and miscellaneous function M", page 390.

Incremental jog positioning

With incremental jog positioning you can move a machine axis by a preset distance.

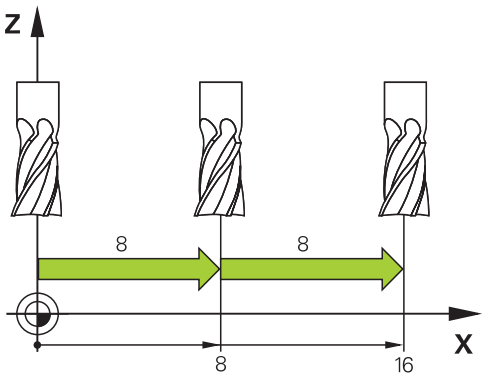

- Select the Manual Operation or El. Handwheel mode
- Shift the soft-key row
- Select incremental jog positioning: Switch the INCREMENT soft key to ON

JOG INCREMENT =

- Enter the jog increment in mm, and confirm with the ENT key
- Press the machine axis direction button as often as desired

The maximum permissible value for infeed is 10 mm.

Traverse with electronic handwheels

The TNC supports traversing with the following new electronic handwheels:

- HR 520: Handwheel compatible for connection to HR 420 with display, data transfer per cable
- HR 550 FS: Handwheel with display, radio data transmission

In addition to this, the TNC continues to support the cable handwheels HR 410 (without display) and HR 420 (with display).

Caution: Danger to the operator and handwheel!

All of the handwheel connectors may only be removed by authorized service personnel, even if it is possible without any tools!

Ensure that the handwheel is plugged in before you switch on the machine!

If you wish to operate your machine without the handwheel, disconnect the cable from the machine and secure the open socket with a cap!

Your machine tool builder can make additional functions of the HR 5xx available. Refer to your machine manual.

A HR 5xx handwheel is recommended if you want to use the handwheel superimposition in virtual axis function See "Virtual tool axis VT".

The portable HR 5xx handwheels feature a display on which the TNC shows information. In addition, you can use the handwheel soft keys for important setup functions, e.g. datum setting or entering and running M functions.

As soon as you have activated the handwheel with the handwheel activation key, the operating panel is locked. This is indicated by a pop-up window on the TNC screen.

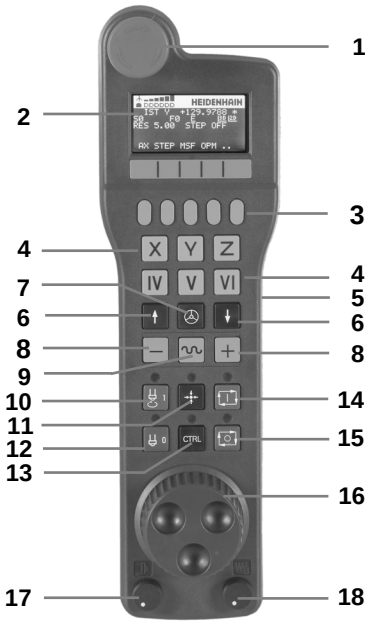

1 EMERGENCY STOP button
2 Handwheel display for status display and function selection, for further information,
3 Soft keys
4 Axis selection keys; can be exchanged by the machine manufacturer depending on the axis configuration
5 Permissive key
6 Arrow keys for defining handwheel sensitivity
7 Handwheel activation key
8 Key for TNC traverse direction of the selected axis
9 Rapid traverse superimposition for direction key
10 Spindle switch-on (machine-dependent function, key can be exchanged by the machine manufacturer)
11 "Generate NC block" key (machine-dependent function, key can be exchanged by the machine manufacturer)
12 Spindle switch-off (machine-dependent function, key can be exchanged by the machine manufacturer)
13 CTRL key for special functions (machine-dependent function, key can be exchanged by the machine manufacturer)
14 NC start (machine-dependent function, key can be exchanged by the machine manufacturer)
15 NC stop (machine-dependent function, key can be exchanged by the machine manufacturer)
16 Handwheel
17 Spindle speed potentiometer
18 Feed rate potentiometer
19 Cable connection, not available with the HR 550 FS wireless handwheel

Handwheel display

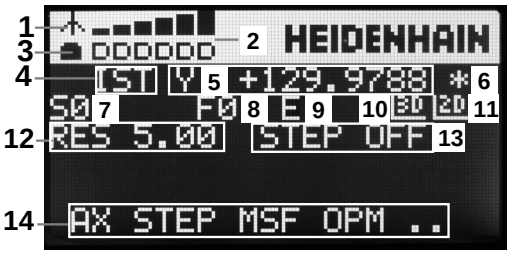

1 **Only with wireless handwheel HR 550 FS**: Shows whether the handwheel is in the docking station or whether wireless operation is active
2 **Only with wireless handwheel HR 550 FS:** Shows the field strength, 6 bars = maximum field strength
3 **Only with wireless handwheel HR 550 FS:** Shows the charge status of the rechargeable battery, 6 bars = fully charged A bar moves from the left to the right during recharging
4 **ACTL**: Type of position display
5 **Y+129.9788**: Position of the selected axis
6 *****: STIB (control in operation); program run has been started or axis is in motion
7 **S0:**: Current spindle speed
8 **F0:** Feed rate at which the selected axis is moving
9 **E**: Error message
10 **3D**: Tilted-working-plane function is active
11 **2D**: Basic rotation function is active
12 **RES 5.0:** Active handwheel resolution. Distance in mm/rev (°/rev for rotary axes) that the selected axis moves for one handwheel revolution
13 **STEP ON** or **OFF:** Incremental jog active or inactive. If the function is active, the TNC also displays the active jog increment
14 Soft-key row: Selection of various functions, described in the following sections

Special features of the HR 550 FS wireless handwheel

Due to various potential sources of interference, a wireless connection is not as reliable as a cable connection. Before you use the wireless handwheel it must therefore be checked whether there are any other radio users in the surroundings of the machine. This inspection for presence of radio frequencies or channels is recommended for all industrial radio systems.

When the HR550 is not needed, always put it in the handwheel holder. This way you can ensure that the handwheel batteries are always ready for use thanks to the contact strip on the rear side of the wireless handwheel and the recharge control, and that there is a direct contact connection for the emergency stop circuit.

If an error (interruption of the radio connection, poor reception quality, defective handwheel component) occurs, the handwheel always reacts with an emergency stop.

Please read the notes on the configuration of the HR 550 FS wireless handwheel See "Configure HR 550 FS wireless handwheel"

Caution: Danger to the operator and machine!

Due to safety reasons you must switch off the wireless handwheel and the handwheel holder after an operating time of 120 hours at the latest so that the TNC can run a functional test when it is restarted!

If you use several machines with wireless handwheels in your workshop you have to mark the handwheels and holders that belong together so that their respective associations are clearly identifiable (e.g. by color stickers or numbers). The markings on the wireless handwheel and the handwheel holder must be clearly visible to the user!

Before every use, make sure that the correct handwheel for your machine is active.

The HR 550 FS wireless handwheel features a rechargeable battery. The battery is recharged when you put the handwheel in the holder (see figure).

You can operate the HR 550 FS with the accumulator for up to 8 hours before it must be recharged again. It is recommended, however, that you always put the handwheel in its holder when you are not using it.

As soon as the handwheel is in its holder, it switches internally to cable operation. In this way you can use the handwheel even if it were completely discharged. The functions are the same as with wireless operation.

When the handwheel is completely discharged, it takes about 3 hours until it is fully recharged in the handwheel holder.

Clean the contacts **1** in the handwheel holder and of the handwheel regularly to ensure their proper functioning.

The transmission range is amply dimensioned. If you should nevertheless happen to come near the edge of the transmission area, which is possible with very large machines, the HR 550 FS warns you in time with a plainly noticeable vibration alarm. If this happens you must reduce the distance to the handwheel holder, into which the radio receiver is integrated.

Caution: Danger to the workpiece and tool!

If interruption-free operation is no longer possible within the transmission range the TNC automatically triggers an emergency stop. This can also happen during machining. Try to stay as close as possible to the handwheel holder and put the handwheel in its holder when you are not using it.

If the TNC has triggered an emergency stop you must reactivate the handwheel. Proceed as follows:

- Select the Programming and Editing mode of operation
- Press the MOD key to select the MOD function
- Scroll through the soft-key row

- Select the configuration menu for the wireless handwheel: Press the SET UP WIRELESS HANDWHEEL soft key
- Click the **Start handwheel** button to reactivate the wireless handwheel
- To save the configuration and exit the configuration menu, press the **END** button

The MOD mode of operation includes a function for initial operation and configuration of the handwheel See "Configure HR 550 FS wireless handwheel", page 483.

Selecting the axis to be moved

You can activate directly through the axis address keys the principal axes X, Y, Z and three other axes defined by the machine tool builder. Your machine tool builder can also place the virtual axis VT directly on one of the free axis keys. If the virtual axis VT is not on one of the axis selection keys, proceed as follows:

- Press the handwheel soft key F1 (**AX**): The TNC displays all active axes on the handwheel display. The currently active axis blinks
- Select the desired axis with the handwheel soft keys F1 (**->**) or F2 (**<-**) and confirm with the handwheel soft key F3 (**OK**)

Setting the handwheel sensitivity

The handwheel sensitivity specifies the distance an axis moves per handwheel revolution. The sensitivity levels are pre-defined and are selectable with the handwheel arrow keys (only when incremental jog is not active).

Selectable sensitivity levels: 0.01/0.02/0.05/0.1/0.2/0.5/1/2/5/10/20 [mm/revolution or degrees/revolution]

Moving the axes

- Activate the handwheel: Press the handwheel key on the HR 5xx: Now you can only operate the TNC via the HR 5xx; the TNC shows a pop-up window containing information on the TNC screen
- Select the desired operating mode via the OPM soft key if necessary
- If required, press and hold the permissive button
- Use the handwheel to select the axis to be moved. Select the additional axes via soft key, if required
- Move the active axis in the positive direction, or
- Move the active axis in the negative direction
- Deactivate the handwheel: Press the handwheel key on the HR 5xx : Now you can operate the TNC again via the operating panel

Potentiometer settings

The potentiometers of the machine operating panel continue to be active after you have activated the handwheel. If you want to use the potentiometers on the handwheel, proceed as follows:

- Press the CTRL and Handwheel keys on the HR 5xx. The TNC shows the soft-key menu for selecting the potentiometers on the handwheel display
- Press the HW soft key to activate the handwheel potentiometers

If you have activated the potentiometers on the handwheel, you must reactivate the potentiometers of the machine operating panel before deselecting the handwheel. Proceed as follows:

- Press the CTRL and Handwheel keys on the HR 5xx. The TNC shows the soft-key menu for selecting the potentiometers on the handwheel display
- Press the KBD soft key to activate the potentiometers of the machine operating panel

Incremental jog positioning

With incremental jog positioning the TNC moves the currently active handwheel axis by a preset distance defined by you:

- Press the handwheel soft key F2 (**STEP**)
- Activate incremental jog positioning: Press handwheel soft key 3 (**ON**)
- Select the desired jog increment by pressing the F1 or F2 key. If you press and hold the respective key, each time it reaches a decimal value 0 the TNC increases the counting increment by a factor of 10. If in addition you press the CTRL key, the counting increment increases to 1. The smallest possible jog increment is 0.0001 mm. The largest possible is 10 mm
- Confirm the selected jog increment with soft key 4 **(OK)**
- With the + or – handwheel key, move the active handwheel axis in the corresponding direction

Entering miscellaneous functions M

- Press the handwheel soft key F3 (**MSF**)
- Press the handwheel soft key F1 (**M**)
- Select the desired M function number by pressing the F1 or F2 key
- Execute the M function with the NC start key

Entering the spindle speed S

- Press the handwheel soft key F3 (**MSF**)
- Press the handwheel soft key F2 (**S**)
- Select the desired speed by pressing the F1 or F2 key. If you press and hold the respective key, each time it reaches a decimal value 0 the TNC increases the counting increment by a factor of 10. If in addition you press the CTRL key, the counting increment increases to 1000
- Activate the new speed S with the NC start key

Entering the feed rate F

- Press the handwheel soft key F3 (**MSF**)
- Press the handwheel soft key F3 (**F**)
- Select the desired feed rate by pressing the F1 or F2 key. If you press and hold the respective key, each time it reaches a decimal value 0 the TNC increases the counting increment by a factor of 10. If in addition you press the CTRL key, the counting increment increases to 1000
- Confirm the new feed rate F with the handwheel soft key F3 (**OK**)

Datum setting

- Press the handwheel soft key F3 (**MSF**)
- Press the handwheel soft key F4 (**PRS**)
- If required, select the axis in which the datum is to be set.
- Reset the axis with the handwheel soft key F3 **(OK),** or with F1 and F2 set the desired value and then confirm with F3 (**OK**) By also pressing the CTRL key, you can increase the counting increment to 10

Changing modes of operation

With the handwheel soft key F4 **(OPM),** you can use the handwheel to switch the mode of operation, provided that the current status of the control allows a mode change.

- Press the handwheel soft key F4 (**OPM**)
- Select the desired operating mode by handwheel soft key
  - MAN: Manual Operation
    MDI: Positioning with manual data input
    SGL: Program run, single block
    RUN: Program run, full sequence

Generating a complete L Block

Your machine tool builder can assign any function to the "Generate NC block" handwheel key. Refer to your machine manual.

- Select the **Positioning with MDI** operating mode
- If required, use the arrow keys on the TNC keyboard to select the NC block after which the new L block is to be inserted
- Activate the handwheel
- Press the "Generate NC block" handwheel key: The TNC inserts a complete L block containing all axis positions selected through the MOD function

Features in the program run modes of operation

You can use the following functions in the Program Run modes of operation:

- NC start (handwheel NC-start key)
- NC stop (handwheel NC-stop key)
- After the NC-stop key has been pressed: Internal stop (handwheel soft keys **MOP** and then **STOP**)
- After the NC-stop key has been pressed: Manual axis traverse (handwheel soft keys **MOP** and then **MAN**)
- Returning to the contour after the axes were moved manually during a program interruption (handwheel soft keys **MOP** and then **REPO**). Operation is by handwheel soft keys, which function similarly to the control-screen soft keys, See "Returning to the contour", page 459
- On/off switch for the Tilted Working Plane function (handwheel soft keys **MOP** and then **3D**)

12.3 Spindle speed S, feed rate F and miscellaneous function M

Application

In the Manual Operation and El. Handwheel operating modes, you can enter the spindle speed S, feed rate F and the miscellaneous functions M with soft keys. The miscellaneous functions are described in Chapter 7 "Programming: Miscellaneous functions."

The machine tool builder determines which miscellaneous functions M are available on your control and what effects they have.

Entering values

Spindle speed S, miscellaneous function M

S

- Enter the spindle speed: Press the S soft key

SPINDLE SPEED S=

I

- Enter **1000** (spindle speed) and confirm your entry with the machine START button.

The spindle speed S with the entered rpm is started with a miscellaneous function M. Proceed in the same way to enter a miscellaneous function M.

Feed rate F

After entering a feed rate F, you must confirm your entry with the ENT key instead of the machine START button.

The following is valid for feed rate F:

- If you enter F=0, then the lowest feed rate from the machine parameter **manualFeed** is effective.
- If the feed rate entered exceeds the value defined in the machine parameter **maxFeed**, then the parameter value is effective.
- F is not lost during a power interruption

Adjusting spindle speed and feed rate

With the override knobs you can vary the spindle speed S and feed rate F from 0% to 150% of the set value.

The override knob for spindle speed is only functional on machines with infinitely variable spindle drive.

12.4 Datum setting without a 3-D touch probe

Note

Setting the datum with a 3-D touch probe: See "Datum Setting with 3-D Touch Probe (Touch Probe Function Software Option)".

You fix a datum by setting the TNC position display to the coordinates of a known position on the workpiece.

Preparation

- Clamp and align the workpiece
- Insert the zero tool with known radius into the spindle
- Ensure that the TNC is showing the actual position values

Workpiece presetting with axis keys

Protective measure
If the workpiece surface must not be scratched, you can lay a metal shim of known thickness d on it. Then enter a tool axis datum value that is larger than the desired datum by the value d.

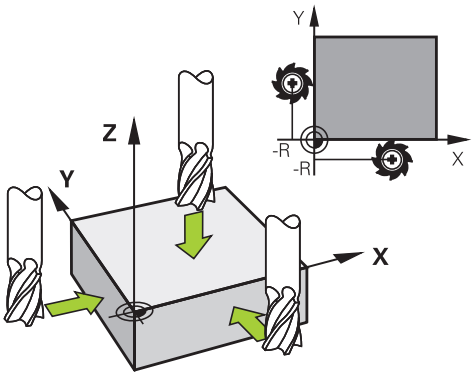

- Select the **MANUAL OPERATION** mode
- Move the tool slowly until it touches (scratches) the workpiece surface
- Select the axis

DATUM SETTING Z=

- Zero tool in spindle axis: Set the display to a known workpiece position (here, 0) or enter the thickness d of the shim. In the tool axis, offset the tool radius

Repeat the process for the remaining axes.

If you are using a preset tool, set the display of the tool axis to the length L of the tool or enter the sum Z=L+d

The TNC automatically saves the datum set with the axis keys in line 0 of the preset table.

Datum management with the preset table

You should definitely use the preset table if:

- Your machine is equipped with rotary axes (tilting table or swivel head) and you work with the function for tilting the working plane
- Your machine is equipped with a spindle-head changing system
- Up to now you have been working with older TNC controls with REF-based datum tables
- You wish to machine identical workpieces that are differently aligned

The preset table can contain any number of lines (datums). To optimize the file size and the processing speed, you should use only as many lines as you need for datum management.

For safety reasons, new lines can be inserted only at the end of the preset table.

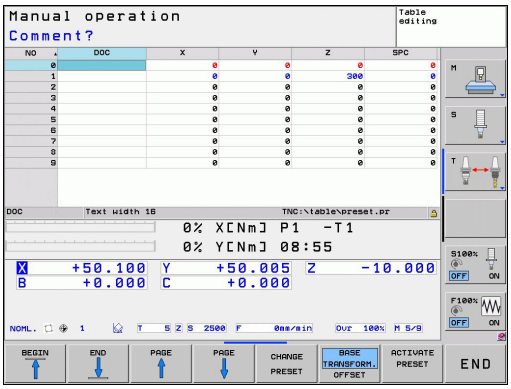

Saving the datums in the preset table

The preset table has the name **PRESET.PR,** and is saved in the directory **TNC:\table**. **PRESET.PR** is editable in the **Manual Operation** and **El. Handwheel** modes only if the **CHANGE PRESET** soft key was pressed.

It is permitted to copy the preset table into another directory (for data backup). Lines that were written by your machine tool builder are also always write-protected in the copied tables. You therefore cannot edit them.

Never change the number of lines in the copied tables! That could cause problems when you want to reactivate the table.

To activate the preset table copied to another directory you have to copy it back to the directory **TNC:**table\.

There are several methods for saving datums and/or basic rotations in the preset table:

- Through probing cycles in the **Manual Operation** or **El. Handwheel** modes (see Chapter 14)
- Through the probing cycles 400 to 402 and 410 to 419 in automatic mode (see User's Manual, Cycles, Chapters 14 and 15)
- Manual entry (see description below)

Basic rotations from the preset table rotate the coordinate system about the preset, which is shown in the same line as the basic rotation.

Remember to ensure that the position of the tilting axes matches the corresponding values of the 3-D ROT menu when setting the datum. Therefore:

- If the "Tilt working plane" function is not active, the position display for the rotary axes must be = 0° (zero the rotary axes if necessary).
- If the "Tilt working plane" function is active, the position displays for the rotary axes must match the angles entered in the 3-D ROT menu.

The line 0 in the preset table is write protected. In line 0, the TNC always saves the datum that you most recently set manually via the axis keys or via soft key. If the datum set manually is active, the TNC displays the text **PR MAN(0)** in the status display.

Manually saving the datums in the preset table

In order to set datums in the preset table, proceed as follows:

- Select the **MANUAL OPERATION** mode
- Move the tool slowly until it touches (scratches) the workpiece surface, or position the measuring dial correspondingly
- Display the preset table: The TNC opens the preset table and sets the cursor to the active table row
- Select functions for entering the presets: The TNC displays the available possibilities for entry in the soft-key row. See the table below for a description of the entry possibilities
- Select the line in the preset table that you want to change (the line number is the preset number)
- If needed, select the column (axis) in the preset table that you want to change
- Use the soft keys to select one of the available entry possibilities (see the following table)

Function	Soft key
Directly transfer the actual position of the tool (the measuring dial) as the new datum: This function only saves the datum in the axis which is currently highlighted	
Assign any value to the actual position of the tool (the measuring dial): This function only saves the datum in the axis which is currently highlighted. Enter the desired value in the pop-up window	ENTER NEW PRESET
Incrementally shift a datum already stored in the table: This function only saves the datum in the axis which is currently highlighted. Enter the desired corrective value with the correct sign in the pop-up window. If inch display is active: Enter the value in inches, and the TNC will internally convert the entered values to mm	CORRECT THE PRESET

Function	Soft key
Directly enter the new datum without calculation of the kinematics (axis-specific). Only use this function if your machine has a rotary table, and you want to set the datum to the center of the rotary table by entering 0. This function only saves the datum in the axis which is currently highlighted. Enter the desired value in the pop-up window. If inch display is active: Enter the value in inches, and the TNC will internally convert the entered values to mm	EDIT CURRENT FIELD
Select the BASIC TRANSFORMATION/AXIS OFFSET view. The BASIC TRANSFORMATION view shows the X, Y and Z columns. Depending on the machine, the SPA, SPB and SPC columns are displayed additionally. Here, the TNC saves the basic rotation (for the Z tool axis, the TNC uses the SPC column). The OFFSET view shows the offset values for the preset	BASE TRANSFORM. OFFSET
Write the currently active datum to a selectable line in the table: This function saves the datum in all axes, and then activates the appropriate row in the table automatically. If inch display is active: Enter the value in inches, and the TNC will internally convert the entered values to mm	SAVE PRESET

Editing the preset table

Editing function in table mode	Soft key
Select beginning of table	BEGIN
Select end of table	END
Select previous page in table	PAGE
Select next page in table	PAGE
Select the functions for preset entry	CHANGE PRESET
Display the "Basic Transformation/Axis Offset" selection	BASE TRANSFORM. OFFSET
Activate the datum of the selected line of the preset table	ACTIVATE PRESET
Add the entered number of lines to the end of the table (2nd soft-key row)	APPEND N LINES
Copy the highlighted field (2nd soft-key row)	COPY FIELD
Insert the copied field (2nd soft-key row)	PASTE FIELD
Reset the selected line: The TNC enters - in all columns (2nd soft-key row)	RESET LINE
Insert a single line at the end of the table (2nd soft-key row)	INSERT LINE
Delete a single line at the end of the table (2nd soft-key row)	DELETE LINE

Activating a datum from the preset table in the Manual Operation mode

When activating a datum from the preset table, the TNC resets the active datum shift, mirroring, rotation and scaling factor.

However, a coordinate transformation that was programmed in Cycle 19 Tilted Working Plane, or through the PLANE function, remains active.

- Select the **MANUAL OPERATION** mode
- Display the preset table
- Select the datum number you want to activate, or
- With the GOTO key, select the datum number that you want to activate. Confirm with the ENT key
- Activate the datum
- Confirm activation of the datum. The TNC sets the display and—if defined—the basic rotation
- Exit the preset table

Activating a datum from the preset table in an NC program

To activate datums from the preset table during program run, use Cycle 247. In Cycle 247 you define the number of the datum that you want to activate (see User's Manual, Cycles, Cycle 247 SET DATUM).

12.5 Using 3-D touch probes

Overview

The following touch probe cycles are available in the Manual Operation mode:

HEIDENHAIN only gives warranty for the function of the probing cycles if HEIDENHAIN touch probes are used.

The TNC must be specially prepared by the machine tool builder for the use of a 3-D touch probe. Refer to your machine manual.

Function	Soft key	Page
Calibrating the effective length	CAL L	407
Calibrating the effective radius	CAL R	408
Measuring a basic rotation using a line	PROBING ROT	412
Setting a datum in any axis	PROBING POS	414
Setting a corner as datum	PROBING P	415
Setting a circle center as datum	PROBING CC	417
Setting the centerline as datum	PROBING	419
Touch probe system data management	TASTSYST. TABLE	See User's Manual for Cycles

For more information about the touch probe table, refer to the User's Manual for Cycle Programming.

Functions in touch probe cycles

Soft keys that are used to select the probing direction or a probing routine are displayed in the manual touch probe cycles. The soft keys displayed vary depending on the respective cycle:

Soft key	Function
X+	Select the probing direction
	Capture the actual position
	Probe hole (inside circle) automatically
	Probe stud (outside circle) automatically

Automatic probing routine for holes and studs

> **!** If you use a function for probing a circle automatically, the TNC automatically positions the touch probe to the respective touch points. Ensure that the positions can be approached without collision.

If you use a probing routine for probing a hole or a stud automatically, the TNC opens a form with the required input fields.

Input fields in the Measure stud and Measure hole forms

Input field	Function
Stud diameter? or **Hole diameter?**	Diameter of probe contact (optional for holes)
Safety clearance?	Distance to the probe contact in the plane
Incr. clearance height?	Positioning of touch probe in spindle axis direction (starting from the current position)
Starting angle?	Angle for the first probing operation (0° = Positive direction of principal axis, i.e. in X+ for spindle axis Z). All other probe angles result from the number of touch points.
Number of touch points?	Number of probing operations (3 to 8)
Angular length?	Probing a full circle (360°) or a circle segment (angular length<360°)

Position the touch probe approximately in the center of the hole (inside circle) or near the first touch point on the stud (outside circle), and select the soft key for the first probing direction. Once you press the machine START button to start the touch probe cycle, the TNC automatically performs all prepositioning movements and probing operations.

The TNC positions the touch probe to the individual touch points, taking the safety clearance into account. If a clearance height has been defined, the TNC positions the touch probe to clearance height in the spindle axis beforehand.

The TNC approaches the position at the feed rate **FMAX** defined in the touch probe table. The defined probing feed rate **F** is used for the actual probing operation.

Before starting the automatic probing routine, you need to preposition the touch probe near the first touch point. Offset the touch probe by approximately the safety clearance (value from touch probe table + value from input form) opposite to the probing direction.

For an inside circle with a large diameter, the TNC can also preposition the touch probe on a circular arc at the positioning feed rate FMAX. This requires that you enter a safety clearance for prepositioning and the hole diameter in the input form. Position the touch probe inside the hole at a position that is offset by approximately the safety clearance from the wall. For prepositioning, keep in mind the starting angle for the first probing operation (with an angle of 0°, the TNC probes in the positive direction of the principal axis).

Selecting touch probe cycles

- Select the Manual Operation or El. Handwheel mode of operation

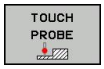

- Select the touch probe functions by pressing the TOUCH PROBE soft key. The TNC displays additional soft keys (see overview table).

- Select the touch probe cycle by pressing the appropriate soft key, for example PROBING POS, for the TNC to display the associated menu

When you select a manual probing function, the TNC opens a form displaying all data required. The content of the forms varies depending on the respective function.

You can also enter values in some of the fields. Use the arrow keys to move to the desired input field. You can position the cursor only in fields that can be edited. Fields that cannot be edited appear dimmed.

Recording measured values from the touch-probe cycles

The TNC must be specially prepared by the machine tool builder for use of this function. Refer to your machine manual.

After executing any selected touch probe cycle, the TNC displays the soft key WRITE LOG TO FILE. If you press this soft key, the TNC will record the current values determined in the active touch probe cycle.

If you store the measuring results, the TNC creates the text file TCHPRMAN.TXT. Unless you define a specific path in the machine parameter **fn16DefaultPath**, the TNC will store the TCHPRMAN.TXT file in the main directory **TNC:**.

When you press the WRITE LOG TO FILE soft key, the TCHPRMAN.TXT file must not be active in the **Programming** mode of operation. The TNC will otherwise display an error message.

The TNC stores the measured data in the TCHPRMAN.TXT file only. If you execute several touch probe cycles in succession and want to store the resulting measured data, you must make a backup of the contents stored in TCHPRMAN.TXT between the individual cycles by copying or renaming the file.

Format and content of the TCHPRMAN.TXT file are preset by the machine tool builder.

Writing measured values from the touch probe cycles in a datum table

Use this function if you want to save measured values in the workpiece coordinate system. If you want to save measured values in the machine-based coordinate system (REF coordinates), press the ENTER IN PRESET TABLE SOFT KEY, See "Writing measured values from the touch probe cycles in the preset table".

With the ENTER IN DATUM TABLE soft key, the TNC can write the values measured during a touch probe cycle in a datum table:

- Select any probe function
- Enter the desired coordinates of the datum in the appropriate input boxes (depends on the touch probe cycle being run)
- Enter the datum number in the **Number in table=** input box
- Press the ENTER IN DATUM TABLE soft key. The TNC saves the datum in the indicated datum table under the entered number

Writing measured values from the touch probe cycles in the preset table

Use this function if you want to save measured values in the machine-based coordinate system (REF coordinates). If you want to save measured values in the workpiece coordinate system, use the ENTER IN DATUM TABLE SOFT KEY, See "Writing measured values from the touch probe cycles in a datum table".

With the ENTER IN PRESET TABLE soft key, the TNC can write the values measured during a probe cycle in the preset table. The measured values are then stored referenced to the machine-based coordinate system (REF coordinates). The preset table has the name PRESET.PR, and is saved in the directory TNC:\table\.

- Select any probe function
- Enter the desired coordinates of the datum in the appropriate input boxes (depends on the touch probe cycle being run)
- Enter the preset number in the **Number in table:** input box
- Press the ENTER IN PRESET TABLE soft key. The TNC saves the datum in the preset table under the entered number

12.6 Calibrating a 3-D touch trigger probe

Introduction

In order to precisely specify the actual trigger point of a 3-D touch probe, you must calibrate the touch probe, otherwise the TNC cannot provide precise measuring results.

Always calibrate a touch probe in the following cases:

- Commissioning
- Stylus breakage
- Stylus exchange
- Change in the probe feed rate
- Irregularities caused, for example, when the machine heats up
- Change of active tool axis

When you press the OK soft key after calibration, the calibration values are applied to the active touch probe. The updated tool data become effective immediately, and a new tool call is not necessary.

During calibration, the TNC finds the "effective" length of the stylus and the "effective" radius of the ball tip. To calibrate the 3-D touch probe, clamp a ring gauge or a stud of known height and known radius to the machine table.

The TNC provides calibration cycles for calibrating the length and the radius:

- Press the TOUCH PROBE soft key

- Display the calibration cycles: Press CALIBRATE TS
- Select the calibration cycle

Calibration cycles of the TNC

Soft key	Function	Page
	Calibrating the length	407
	Measure the radius and the center offset using a calibration ring	408
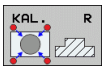	Measure the radius and the center offset using a stud or a calibration pin	408
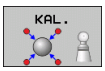	Measure the radius and the center offset using a calibration sphere	408

Calibrating the effective length

HEIDENHAIN only gives warranty for the function of the probing cycles if HEIDENHAIN touch probes are used.

The effective length of the touch probe is always referenced to the tool datum. The machine tool builder usually defines the spindle tip as the tool datum.

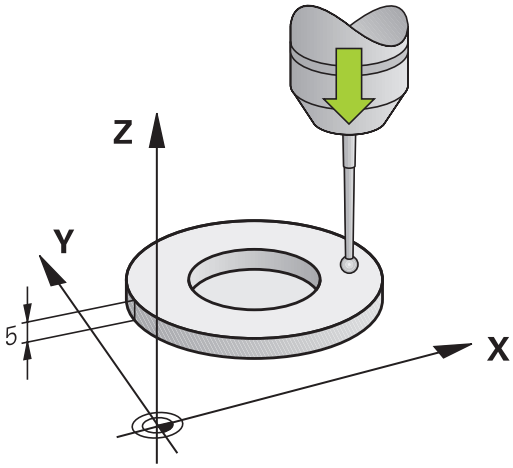

- Set the datum in the spindle axis such that for the machine tool table Z=0.

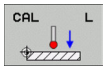

- Select the calibration function for the touch probe length: Press the CAL. L soft key. The TNC opens a menu window with input fields
- Datum for length: Enter the height of the ring gauge
- New cal. spindle angle: Spindle angle that is used for the calibration. The TNC uses CAL_ANG from the touch probe table as a default value. If you change the value, the TNC saves the value to the touch probe table during calibration
- Move the touch probe to a position just above the ring gauge
- To change the traverse direction (if necessary), press a soft key or an arrow key
- To probe the upper surface of the ring gauge, press the machine START button
- Check the results (change the values if required)
- Press the OK soft key for the values to take effect
- Press the END soft key to terminate the calibrating function

Calibrating the effective radius and compensating center misalignment

HEIDENHAIN only gives warranty for the function of the probing cycles if HEIDENHAIN touch probes are used.

The center offset can be determined only with a suitable touch probe.

If you want to calibrate using the outside of an object, you need to preposition the touch probe above the center of the calibration sphere or calibration pin. Ensure that the touch points can be approached without collision.

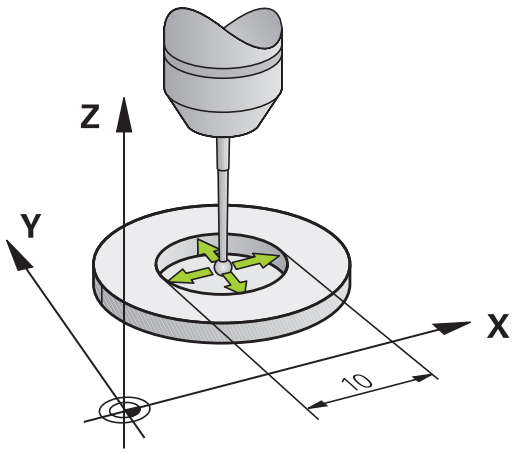

When calibrating the ball tip radius, the TNC executes an automatic probing routine. During the first probing cycle, the TNC determines the center of the calibration ring or stud (coarse measurement) and positions the touch probe in the center. Then the ball tip radius is determined during the actual calibration process (fine measurement). If the touch probe allows probing from opposite orientations, the center offset is determined during another cycle.

The characteristic of whether and how your touch probe can be oriented is already defined in HEIDENHAIN touch probes. Other touch probes are configured by the machine tool builder.

After the touch probe is inserted, it normally needs to be aligned exactly with the spindle axis. The calibration function can determine the offset between touch-probe axis and spindle axis by probing from opposite orientations (rotation by 180°) and can compute the compensation.

The calibration routine varies depending on how your touch probe can be oriented:

- No orientation possible or orientation possible in only one direction: The TNC executes one approximate and one fine measurement and determines the effective ball tip radius (column R in tool.t)
- Orientation possible in two directions (e.g. HEIDENHAIN touch probes with cable): The TNC executes one approximate and one fine measurement, rotates the touch probe by 180° and then executes four more probing operations. The center offset (CAL_OF in tchprobe.tp) is determined in addition to the radius by probing from opposite orientations.
- Any orientation possible (e.g. HEIDENHAIN infrared touch probes): For probing routine, see "orientation possible in two directions."

Proceed as follows for manual calibration using a calibration ring:

- In the Manual Operation mode, position the ball tip inside the bore of the ring gauge

- Select the calibration function: Press the CAL. R soft key
- Enter the diameter of the ring gauge
- Enter the safety clearance
- New cal. spindle angle: Spindle angle that is used for the calibration. The TNC uses CAL_ANG from the touch probe table as a default value. If you change the value, the TNC saves the value to the touch probe table during calibration
- Start the probing procedure: Press the machine START button. The 3-D touch probe probes all required touch points in an automatic probing routine and calculates the effective ball-tip radius. If probing from opposite orientations is possible, the TNC calculates the center offset
- Check the results (change the values if required)
- Press the OK soft key for the values to take effect
- Press the END soft key to terminate the calibrating function

In order to be able to determine the ball-tip center misalignment, the TNC needs to be specially prepared by the machine manufacturer. Refer to your machine manual.

Proceed as follows for manual calibration with a stud or calibration pin:

- In the Manual Operation mode, position the ball tip above the center of the calibration pin

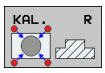

- Select the calibration function: Press the CAL. R soft key
- Enter the diameter of the stud
- Enter the safety clearance
- New cal. spindle angle: Spindle angle that is used for the calibration. The TNC uses CAL_ANG from the touch probe table as a default value. If you change the value, the TNC saves the value to the touch probe table during calibration
- Start the probing procedure: Press the machine START button. The 3-D touch probe probes all required touch points in an automatic probing routine and calculates the effective ball-tip radius. If probing from opposite orientations is possible, the TNC calculates the center offset
- Check the results (change the values if required)
- Press the OK soft key for the values to take effect
- Press the END soft key to terminate the calibrating function

In order to be able to determine the ball-tip center misalignment, the TNC needs to be specially prepared by the machine manufacturer.

Refer to your machine manual.

Displaying calibration values

The TNC saves the effective length and effective radius of the touch probe in the tool table. The TNC saves the ball-tip center offset of the touch probe in the touch-probe table in the **CAL_OF1** (principal axis) and **CAL_OF2** (secondary axis) columns. You can display the values on the screen by pressing the TOUCH PROBE TABLE soft key.

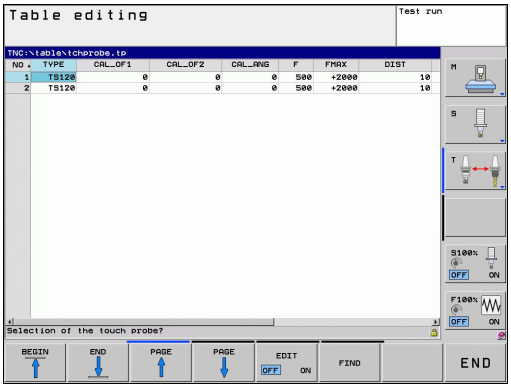

Make sure that you have activated the correct tool number before using the touch probe, regardless of whether you wish to run the touch probe cycle in automatic mode or manual mode.

For more information about the touch probe table, refer to the User's Manual for Cycle Programming.

12.7 Compensating workpiece misalignment with 3-D touch probe

Introduction

HEIDENHAIN only gives warranty for the function of the probing cycles if HEIDENHAIN touch probes are used.

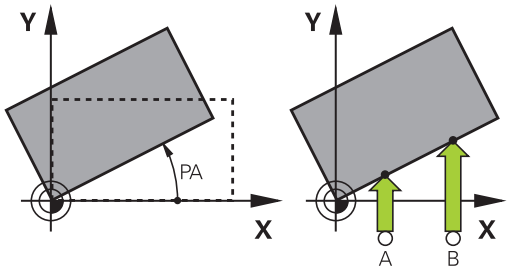

The TNC electronically compensates workpiece misalignment by computing a "basic rotation."

For this purpose, the TNC sets the rotation angle to the desired angle with respect to the reference axis in the working plane. See figure at right.

The TNC saves the basic rotation, depending on the tool axis, in the columns SPA, SPB or SPC of the preset table.

To identify the basic rotation, probe two points on the side of the workpiece. The sequence of probing the points is not important. You can also identify the basic rotation by holes or studs.

Select the probe direction perpendicular to the angle reference axis when measuring workpiece misalignment.

To ensure that the basic rotation is calculated correctly during program run, program both coordinates of the working plane in the first positioning block.

You can also use a basic rotation in conjunction with the PLANE function. In this case, first activate the basic rotation and then the PLANE function.

You can also activate a basic rotation without probing a workpiece. For this purpose enter a value in the basic rotation menu and press the SET BASIC ROTATION soft key.

Identifying basic rotation

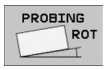

- Select the probe function by pressing the PROBING ROT soft key
- Position the touch probe at a position near the first touch point
- Select the probe direction perpendicular to the angle reference axis: Select the axis by soft key
- Start the probing procedure: Press the machine START button
- Position the touch probe at a position near the second touch point
- To probe the workpiece, press the machine START button. The TNC determines the basic rotation and displays the angle after the dialog **Rotation angle**
- Activate basic rotation: Press the SET BASIC ROTATION soft key
- Terminate the probe function by pressing the END soft key

Saving a basic rotation in the preset table

- After the probing process, enter the preset number in which the TNC is to save the active basic rotation in the **Number in table:** input box
- Press the BASIC ROT. IN PRESETTAB. soft key to save the basic rotation in the preset table

Compensation of workpiece misalignment by rotating the table

- To compensate the identified misalignment by a rotary table position, press the ALIGN ROTARY TABLE soft key after the probing process

> **!** Position all axes to avoid a collision before table rotation. The TNC outputs an additional warning before table rotation.

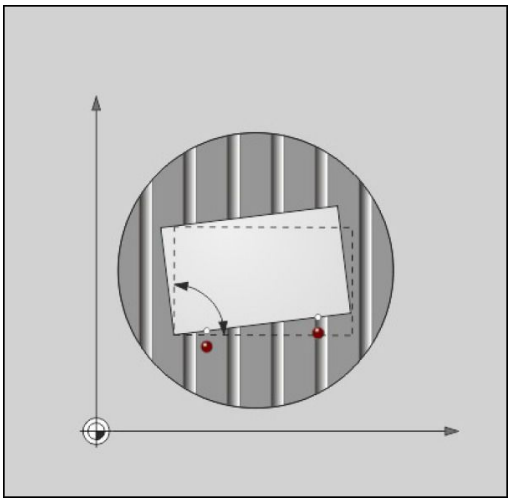

- If you want to set the datum in the rotary table axis, press the SET TABLE ROTATION soft key.
- You can also save the misalignment of the rotary table in any line of the Preset table. Enter the line number and press the TABLEROT IN PRESETTAB. soft key. The TNC saves the angle in the offset column of the rotary table, e.g. in the C_OFFS column with a C axis. If necessary, the view in the Preset table has to be changed with the BASIS-TRANSFORM./OFFSET soft key to display this column.

Displaying a basic rotation

When you select the PROBING ROT function, the TNC displays the active angle of basic rotation in the dialog **Rotation angle**. The TNC also displays the rotation angle in the additional status display (STATUS POS.).

In the status display a symbol is shown for a basic rotation whenever the TNC is moving the axes according to a basic rotation.

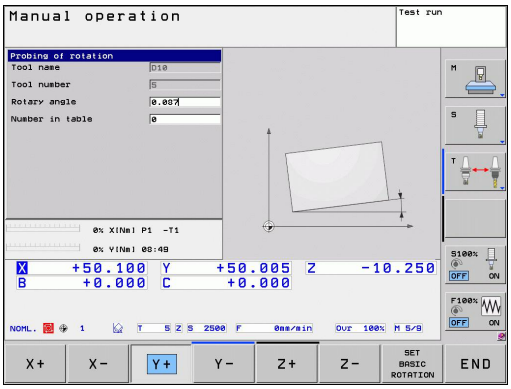

Canceling a basic rotation

- Select the probe function by pressing the PROBING ROT soft key
- Enter a rotation angle of zero and confirm with the SET BASIC ROTATION soft key
- Terminate the probe function by pressing the END soft key

12.8 Datum Setting with 3-D Touch Probe

Overview

The following soft-key functions are available for setting the datum on an aligned workpiece:

Soft key	Function	Page
	Datum setting in any axis with	414
	Setting a corner as datum	415
	Setting a circle center as datum	417
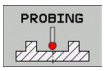	Center line as datum	417

Datum setting in any axis

- Select the probing function: Press the PROBING POS soft key
- Move the touch probe to a position near the touch point
- Use the soft keys to select the probe axis and direction in which you want to set the datum, such as Z in direction Z–
- Start the probing procedure: Press the machine START button
- **Datum**: Enter the nominal coordinate and confirm your entry with the SET DATUM soft key, See "Writing measured values from the touch probe cycles in a datum table", page 404
- To terminate the probe function, press the END soft key

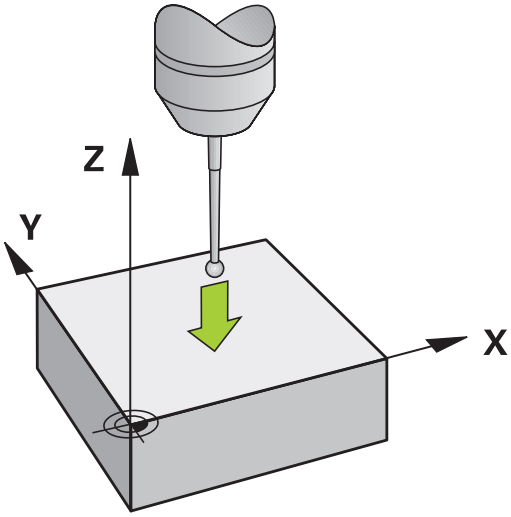

HEIDENHAIN only gives warranty for the function of the probing cycles if HEIDENHAIN touch probes are used.

Corner as datum

- Select the touch probe function: Press the PROBING P soft key
- Position the touch probe near the first touch point on the first workpiece edge
- Select the probe direction by soft key
- Start the probing procedure: Press the machine START button
- Position the touch probe near the second touch point on the same workpiece edge
- Start the probing procedure: Press the machine START button
- Position the touch probe near the first touch point on the second workpiece edge
- Select the probe direction by soft key
- Start the probing procedure: Press the machine START button
- Position the touch probe near the second touch point on the same workpiece edge
- Start the probing procedure: Press the machine START button
- **Datum**: Enter both datum coordinates into the menu window, and confirm your entry with the SET DATUM soft key, or See "Writing measured values from the touch probe cycles in the preset table", page 405
- To terminate the probe function, press the END soft key

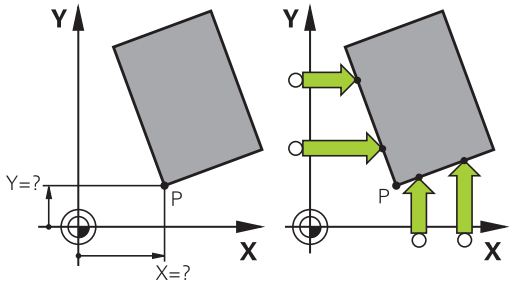

HEIDENHAIN only gives warranty for the function of the probing cycles if HEIDENHAIN touch probes are used.

You can identify the intersection of two straight lines by holes or studs and set this as the datum. For each straight line however, probing must only be with two identical touch probe functions (e.g. two holes).

12.8 Datum Setting with 3-D Touch Probe

The "Corner as datum" probing cycle identifies the angle and intersection of two straight lines. In addition to datum setting, the cycle can also activate a basic rotation. The TNC has two soft keys for you to decide which straight line you wish to use for this. The soft key ROT 1 activates the angle of the first straight line as basic rotation and the soft key ROT 2 the angle of the second straight line.

If you wish to activate the basic rotation in the cycle, you must always do this before datum setting. After you set a datum or write to a zero point or preset table the ROT 1 and ROT 2 soft keys are no longer displayed.

Circle center as datum

With this function, you can set the datum at the center of bore holes, circular pockets, cylinders, studs, circular islands, etc.

Inside circle:

The TNC probes the inside wall of a circle in all four coordinate axis directions.

For incomplete circles (circular arcs) you can choose the appropriate probing direction.

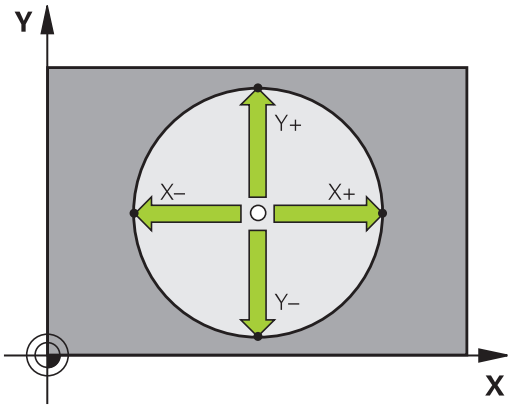

- Position the touch probe approximately in the center of the circle

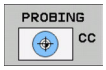

- Select the touch probe function: Press the PROBING CC soft key
- Select the probing direction or press the soft key for the automatic probing routine
- To probe the workpiece, press the machine START button. The touch probe probes the inside wall of the circle in the selected direction. If you are not using the automatic probing routine, you need to repeat this procedure. After the third probing operation, you can have the TNC calculate the center (four touch points are recommended).
- Terminate the probing procedure and switch to the evaluation menu: Press the EVALUATE soft key
- **Datum**: In the menu window, enter both coordinates of the circle center, confirm with the SET DATUM soft key, or write the values to a table (See "Writing measured values from the touch probe cycles in a datum table", page 404, or See "Writing measured values from the touch probe cycles in the preset table", page 405)
- Terminate the probing function: Press the END soft key

> The TNC needs only three touch points to calculate outside or inside circles, e.g. for circle segments. More precise results are obtained if you measure circles using four touch points, however. You should always preposition the touch probe in the center, or as close to the center as possible.

Outside circle:

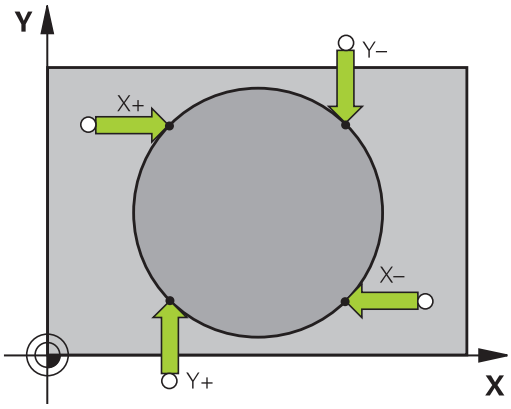

- Position the ball tip at a position near the first touch point outside of the circle
- Select the probe direction by soft key
- To probe the workpiece, press the machine START button. If you are not using the automatic probing routine, you need to repeat this procedure. After the third probing operation, you can have the TNC calculate the center (four touch points are recommended).
- Terminate the probing procedure and switch to the evaluation menu: Press the EVALUATE soft key
- **Datum**: Enter the coordinates of the datum and confirm your entry with the SET DATUM soft key, or write the values to a table (See "Writing measured values from the touch probe cycles in a datum table", page 404, or See "Writing measured values from the touch probe cycles in the preset table", page 405)
- To terminate the probe function, press the END soft key

After the probing procedure is completed, the TNC displays the current coordinates of the circle center and the circle radius PR.

Setting the datum using multiple holes/cylindrical studs

A second soft-key row provides a soft key for using multiple holes or cylindrical studs to set the datum. You can set the intersection of two or more elements as datum.

Select the probing function for the intersection of holes/cylindrical studs:

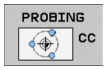

- Select the touch probe function: Press the PROBING CC soft key

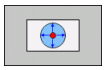

- Hole is to be probed automatically: Define by soft key

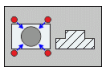

- Circular stud is to be probed automatically: Define by soft key

Preposition the touch probe approximately in the center of the hole or near the first touch point of the circular stud. After you have pressed the NC Start key, the TNC automatically probes the points on the circle.

Move the touch probe to the next hole, repeat the probing operation and have the TNC repeat the probing procedure until all the holes have been probed to set the datum.

Setting the datum in the intersection of multiple holes:

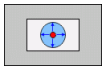

- Preposition the touch probe approximately in the center of the hole
- Hole is to be probed automatically: Define by soft key
- To probe the workpiece, press the machine START button. The touch probe probes the circle automatically.
- Repeat the probing procedure for the remaining elements
- Terminate the probing procedure and switch to the evaluation menu: Press the EVALUATE soft key
- **Datum**: In the menu window, enter both coordinates of the circle center, confirm with the SET DATUM soft key, or write the values to a table (See "Writing measured values from the touch probe cycles in a datum table", page 404, or See "Writing measured values from the touch probe cycles in the preset table", page 405)
- Terminate the probing function: Press the END soft key

Setting a center line as datum

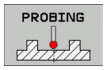

- Select the probe function: Press the PROBING soft key
- Position the touch probe at a position near the first touch point
- Select the probing direction by soft key
- Start the probing procedure: Press the NC Start button
- Position the touch probe at a position near the second touch point
- Start the probing procedure: Press the NC Start button
- **Datum**: Enter the coordinate of the datum in the menu window, confirm with the SET DATUM soft key, or write the value to a table (See "Writing measured values from the touch probe cycles in a datum table", page 404, or See "Writing measured values from the touch probe cycles in the preset table", page 405.
- Terminate the probing function: Press the END key

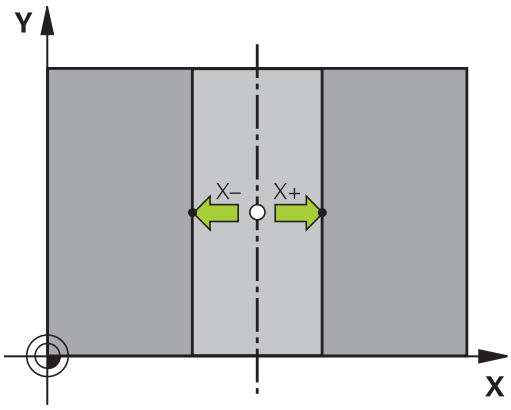

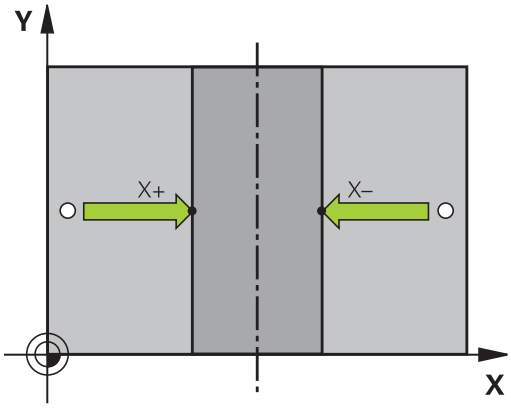

Measuring workpieces with a 3-D touch probe

You can also use the touch probe in the Manual Operation and El. Handwheel operating modes to make simple measurements on the workpiece. Numerous programmable probe cycles are available for complex measuring tasks (see User's Manual for Cycles, Chapter 16, Checking workpieces automatically). With a 3-D touch probe you can determine:

- Position coordinates, and from them,
- Dimensions and angles on the workpiece

Finding the coordinates of a position on an aligned workpiece

- Select the probing function: Press the PROBING POS soft key
- Move the touch probe to a position near the touch point
- Select the probe direction and axis of the coordinate. Use the corresponding soft keys for selection
- Start the probing procedure: Press the machine START button

The TNC shows the coordinates of the touch point as reference point.

Finding the coordinates of a corner in the working plane

Find the coordinates of the corner point: See "Corner as datum ", page 415. The TNC displays the coordinates of the probed corner as reference point.

Measuring workpiece dimensions

- Select the probing function: Press the PROBING POS soft key
- Position the touch probe at a position near the first touch point A
- Select the probing direction by soft key
- Start the probing procedure: Press the machine START button
- If you need the current datum later, write down the value that appears in the Datum display
- Datum: Enter "0"
- Cancel the dialog: Press the END key
- Select the probing function again: Press the PROBING POS soft key
- Position the touch probe at a position near the second touch point B
- Select the probe direction with the soft keys: Same axis but from the opposite direction
- Start the probing procedure: Press the machine START button

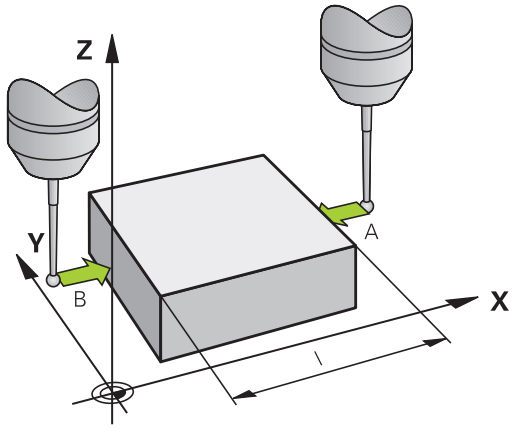

The value displayed as datum is the distance between the two points on the coordinate axis.

To return to the datum that was active before the length measurement:

- Select the probing function: Press the PROBING POS soft key
- Probe the first touch point again
- Set the datum to the value that you wrote down previously
- Cancel the dialog: Press the END key

Measuring angles

You can use the 3-D touch probe to measure angles in the working plane. You can measure

- the angle between the angle reference axis and a workpiece edge, or
- the angle between two sides

The measured angle is displayed as a value of maximum 90°.

Finding the angle between the angle reference axis and a workpiece edge

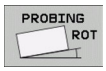

- Select the probe function by pressing the PROBING ROT soft key
- Rotation angle: If you will need the current basic rotation later, write down the value that appears under Rotation angle
- Make a basic rotation with workpiece edge to be compared See "Compensating workpiece misalignment with 3-D touch probe ", page 411
- Press the PROBING ROT soft key to display the angle between the angle reference axis and the workpiece edge as the rotation angle
- Cancel the basic rotation, or restore the previous basic rotation
- Set the rotation angle to the value that you previously wrote down

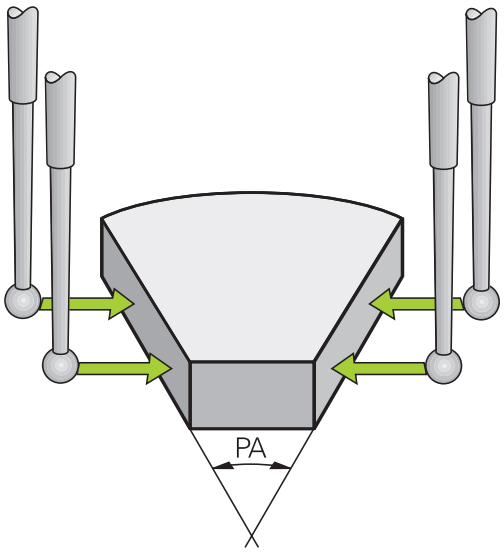

Measuring the angle between two workpiece edges

- Select the probe function by pressing the PROBING ROT soft key
- Rotation angle: If you need the current basic rotation later, write down the displayed rotation angle
- Make a basic rotation with first workpiece edge See "Compensating workpiece misalignment with 3-D touch probe ", page 411
- Probe the second edge as for a basic rotation, but do not set the rotation angle to zero!
- Press the PROBING ROT soft key to display the angle PA between the workpiece edges as the rotation angle
- Cancel the basic rotation, or restore the previous basic rotation by setting the rotation angle to the value that you wrote down previously

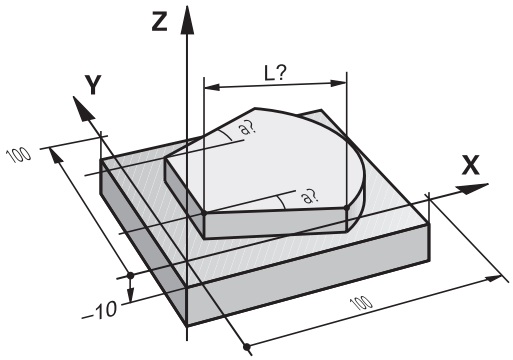

Using touch probe functions with mechanical probes or measuring dials

If you do not have an electronic 3-D touch probe on your machine, you can also use all the previously described manual touch probe functions (exception: calibration function) with mechanical probes or by simply touching the workpiece with the tool.

In place of the electronic signal generated automatically by a 3-D touch probe during probing, you can manually initiate the trigger signal for capturing the **probing position** by pressing a key. Proceed as follows:

- Select any touch probe function by soft key
- Move the mechanical probe to the first position to be captured by the TNC

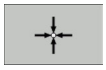

- Confirm the position: Press the actual-position-capture soft key for the TNC to save the current position
- Move the mechanical probe to the next position to be captured by the TNC

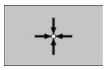

- Confirm the position: Press the actual-position-capture soft key for the TNC to save the current position
- If required, move to additional positions and capture as described previously
- **Datum**: In the menu window, enter the coordinates of the new datum, confirm with the SET DATUM soft key, or write the values to a table (See "Writing measured values from the touch probe cycles in a datum table", page 404, or See "Writing measured values from the touch probe cycles in the preset table", page 405)
- Terminate the probing function: Press the END key

12.9 Tilting the working plane (software option 1)

Application, function

The functions for tilting the working plane are interfaced to the TNC and the machine tool by the machine tool builder. With some swivel heads and tilting tables, the machine tool builder determines whether the entered angles are interpreted as coordinates of the rotary axes or as angular components of a tilted plane. Refer to your machine manual.

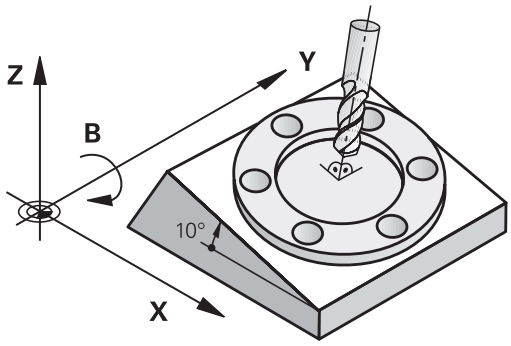

The TNC supports the tilting functions on machine tools with swivel heads and/or tilting tables. Typical applications are, for example, oblique holes or contours in an oblique plane. The working plane is always tilted around the active datum. The program is written as usual in a main plane, such as the X/Y plane, but is executed in a plane that is tilted relative to the main plane.

There are three functions available for tilting the working plane:

- Manual tilting with the 3-D ROT soft key in the Manual Operation mode and Electronic Handwheel mode, See "To activate manual tilting:", page 427
- Tilting under program control, Cycle **19 WORKING PLANE** in the part program (see User's Manual for Cycles, Cycle 19 WORKING PLANE)
- Tilting under program control, **PLANE** function in the part program See "The PLANE Function: Tilting the Working Plane (Software Option 1)", page 349

The TNC functions for "tilting the working plane" are coordinate transformations. The working plane is always perpendicular to the direction of the tool axis.

When tilting the working plane, the TNC differentiates between two machine types:

- **Machine with tilting table**
  - You must tilt the workpiece into the desired position for machining by positioning the tilting table, for example with an L block.
  - The position of the transformed tool axis **does not change** in relation to the machine-based coordinate system. Thus if you rotate the table—and therefore the workpiece—by 90° for example, the coordinate system **does not rotate**. If you press the Z+ axis direction button in the Manual Operation mode, the tool moves in Z+ direction.
  - In calculating the transformed coordinate system, the TNC considers only the mechanically influenced offsets of the particular tilting table (the so-called "translational" components).
- **Machine with swivel head**
  - You must bring the tool into the desired position for machining by positioning the swivel head, for example with an L block.
  - The position of the transformed tool axis changes in relation to the machine-based coordinate system. Thus if you rotate the swivel head of your machine—and therefore the tool —in the B axis by 90° for example, the coordinate system rotates also. If you press the Z+ axis direction button in the Manual Operation mode, the tool moves in X+ direction of the machine-based coordinate system.
  - In calculating the transformed coordinate system, the TNC considers both the mechanically influenced offsets of the particular swivel head (the so-called “translational” components) and offsets caused by tilting of the tool (3-D tool length compensation).

⇨ The TNC only supports tilting the working plane with spindle axis Z.

Traversing reference points in tilted axes

The TNC automatically activates the tilted working plane if this function was enabled when the control was switched off. Then the TNC moves the axes in the tilted coordinate system when an axis-direction key is pressed. Position the tool in such a way that a collision is excluded during the subsequent crossing of the reference points. To cross the reference points you have to deactivate the "Tilt Working Plane" function, See "To activate manual tilting:", page 427.

! **Danger of collision!**

Be sure that the function for tilting the working plane is active in the Manual Operation mode and that the angle values entered in the menu match the actual angles of the tilted axis.

Deactivate the "Tilt Working Plane" function before you cross the reference points. Take care that there is no collision. Retract the tool from the current position first, if necessary.

Position display in a tilted system

The positions displayed in the status window **(ACTL.** and **NOML.)** are referenced to the tilted coordinate system.

Limitations on working with the tilting function

- The probing function for basic rotation is not available if you have activated the working plane function in the Manual Operation mode.
- The actual-position-capture function is not allowed if the tilted working plane function is active.
- PLC positioning (determined by the machine tool builder) is not possible.

To activate manual tilting:

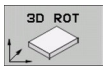

- To select manual tilting, press the 3D ROT soft key.

- Use the arrow keys to move the highlight to the **Manual Operation** menu item

- To activate manual tilting, press the Active soft key

- Use the arrow keys to position the highlight on the desired rotary axis

- Enter the tilt angle

- To conclude entry, press the END key

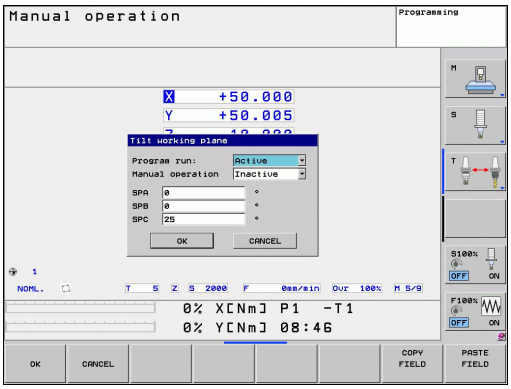

To reset the tilting function, set the desired operating modes in the menu **Tilt working plane** to inactive.

If the tilted working plane function is active and the TNC moves the machine axes in accordance with the tilted axes, the status display shows the symbol.

If you activate the "Tilt working plane" function for the Program Run operating mode, the tilt angle entered in the menu becomes active in the first block of the part program. If you use Cycle **19 WORKING PLANE** or the **PLANE** function in the part program, the angle values defined there are in effect. Angle values entered in the menu will be overwritten.

Setting the current tool-axis direction as the active machining direction

This function must be enabled by your machine manufacturer. Refer to your machine manual.

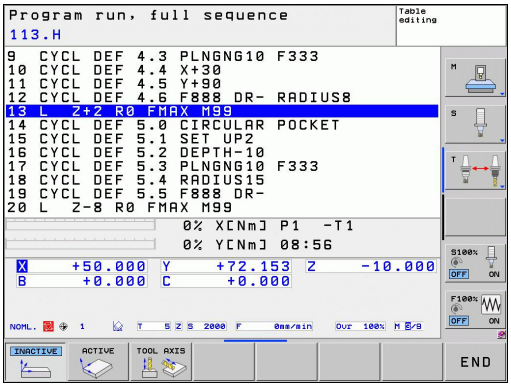

In the Manual Operation and El. Handwheel modes of operation you can use this function to move the tool via the external direction keys or with the handwheel in the direction that the tool axis is currently pointed. Use this function if

- You want to retract the tool in the direction of the tool axis during program interrupt of a 5-axis machining program.
- You want to machine with an inclined tool using the handwheel or the external direction keys in the Manual Operation mode.

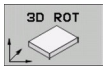

▶ To select manual tilting, press the 3D ROT soft key.

▶ Use the arrow keys to move the highlight to the **Manual Operation** menu item

▶ To activate the current tool-axis direction as the active machining direction, press the Tool Axis soft key

▶ To conclude entry, press the END key

To reset the tilting function, set the **Manual Operation** menu item in the "Tilt working plane" menu to inactive.

The symbol appears in the status display when the **Move in tool-axis direction** function is active.

This function is even available when you interrupt program run and want to move the axes manually.

Setting the datum in a tilted coordinate system

After you have positioned the rotary axes, set the datum in the same manner as for a non-tilted system. The behavior of the TNC during datum setting depends on the setting in machine parameter **CfgPresetSettings/chkTiltingAxes**:

- **chkTiltingAxes: On** With an active tilted working plane, the TNC checks during datum setting in the X, Y and Z axes whether the current coordinates of the rotary axes agree with the tilt angles that you defined (3-D ROT menu). If the tilted working plane function is not active, the TNC checks whether the rotary axes are at 0° (actual positions). If the positions do not agree, the TNC will display an error message.
- **chkTiltingAxes: Off** The TNC does not check whether the current coordinates of the rotary axes (actual positions) agree with the tilt angles that you defined.

! **Danger of collision!**
Always set a reference point in all three reference axes.

13

Positioning with Manual Data Input

13.1 Programming and executing simple machining operations

The Positioning with Manual Data Input mode of operation is particularly convenient for simple machining operations or to pre-position the tool. It enables you to write a short program in HEIDENHAIN conversational programming or in ISO format, and execute it immediately. You can also call TNC cycles. The program is stored in the file $MDI. In the Positioning with MDI mode of operation, the additional status displays can also be activated.

Positioning with manual data input (MDI)

Limitation

The following functions are not available in the MDI mode:

- FK free contour programming
- Program section repeats
- Subprogramming
- Path compensation
- The programming graphics
- Program call **PGM CALL**
- The program-run graphics

- Select the Positioning with MDI mode of operation. Program the file $MDI as you wish
- To start program run, press the machine START button.

Example 1

A hole with a depth of 20 mm is to be drilled into a single workpiece. After clamping and aligning the workpiece and setting the datum, you can program and execute the drilling operation in a few lines.

First you pre-position the tool with straight-line blocks to the hole center coordinates at a setup clearance of 5 mm above the workpiece surface. Then drill the hole with Cycle **200 DRILLING**.

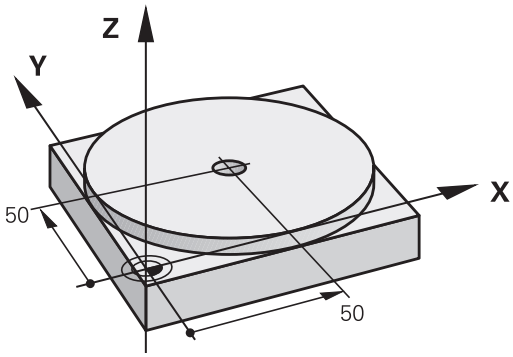

0 BEGIN PGM $MDI MM		
1 TOOL CALL 1 Z S2000		Call the tool: tool axis Z,
		spindle speed 2000 rpm
2 L Z+200 R0 FMAX		Retract the tool (F MAX = rapid traverse)
3 L X+50 Y+50 R0 FMAX M3		Move the tool at F MAX to a position above the hole, spindle on
4 CYCL DEF 200 DRILLING		Define the DRILLING cycle
Q200=5	**;SET-UP CLEARANCE**	Set-up clearance of the tool above the hole
Q201=-15	**;DEPTH**	Hole depth (algebraic sign=working direction)
Q206=250	**;FEED RATE FOR PLNGNG**	Feed rate for drilling
Q202=5	**;PLUNGING DEPTH**	Depth of each infeed before retraction
Q210=0	**;DWELL TIME AT TOP**	Dwell time after every retraction in seconds
Q203=-10	**;SURFACE COORDINATE**	Coordinate of the workpiece surface
Q204=20	**;2ND SET-UP CLEARANCE**	Set-up clearance of the tool above the hole
Q211=0.2	**;DWELL TIME AT BOTTOM**	Dwell time in seconds at the hole bottom
5 CYCL CALL		Call the DRILLING cycle
6 L Z+200 R0 FMAX M2		Retract the tool
7 END PGM $MDI MM		End of program

Straight-line function: See "Straight line L", page 183, DRILLING cycle: See User’s Manual, Cycles, Cycle 200 DRILLING.

Example 2: Correcting workpiece misalignment on machines with rotary tables

- For running a basic rotation with the 3-D touch probe, see "Touch Probe Cycles in the Manual Operation and El. Handwheel modes of operation," section "Compensating workpiece misalignment," in the Cycle Programming User's Manual.
- Write down the rotation angle and cancel the basic rotation

- Select operating mode: Positioning with MDI

IV

- Select the axis of the rotary table, enter the rotation angle you wrote down previously and set the feed rate. For example. **L C+2.561 F50**

- Conclude entry

- Press the machine START button: The rotation of the table corrects the misalignment

Protecting and erasing programs in $MDI

The $MDI file is generally intended for short programs that are only needed temporarily. Nevertheless, you can store a program, if necessary, by proceeding as described below:

- Select the Programming and Editing mode of operation
- To call the file manager, press the PGM MGT key (program management).
- Move the highlight to the $MDI file
- Select "Copy file": Press the COPY soft key

DESTINATION FILE =

- Enter the name under which you want to save the current contents of the $MDI file, e.g. **HOLE**.
- Copy the file
- Close the file manager: Press the END soft key

For more information: See "Copying a single file", page 102.

14

Test run and program run

14.1 Graphics

Application

In the program run modes of operation as well as in the Test Run mode, the TNC graphically simulates the machining of the workpiece. Using soft keys, select whether you desire:

- Plan view
- Projection in three planes
- 3-D view

The TNC graphic depicts the workpiece as if it were being machined with a cylindrical end mill. If a tool table is active, you can also simulate the machining operation with a spherical cutter. For this purpose, enter R2 = R in the tool table.

The TNC will not show a graphic if

- the current program has no valid workpiece blank definition
- no program is selected

The TNC graphic does not show a radius oversize **DR** that has been programmed in the **TOOL CALL** block.

A graphic simulation is only possible under certain conditions for program sections or programs in which rotary axis movements are defined. The graphic may not be displayed correctly by the TNC.

The simulation of programs with 5-axis machining or tilted machining might run at reduced speed. Press the RESOLUTION soft key in order to reduce the resolution of the graphics, thereby increasing the simulation speed. Pressing the RESOLUTION soft key cycles the graphics resolution through **High**, **Medium** and **Low.**

Speed of the Setting test runs

The most recently set speed remains active, even if the power is interrupted, until you change it.

After you have started a program, the TNC displays the following soft keys with which you can set the simulation speed:

Functions	Soft key
Perform the test run at the same speed at which the program will be run (programmed feed rates are taken into account)	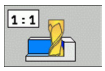
Increase the test speed incrementally	
Decrease the test speed incrementally	
Test run at the maximum possible speed (default setting)	

You can also set the simulation speed before you start a program:

- Shift the soft-key row

- Select the functions for setting the simulation speed

- Select the desired function by soft key, e.g. incrementally increasing the test speed

Overview: Display modes

The TNC displays the following soft keys in the Program Run and Test Run modes of operation:

View	Soft key
Plan view	
Projection in three planes	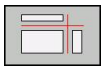
3-D view	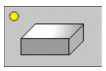

Limitations during program run

A graphical representation of a running program is not possible if the microprocessor of the TNC is already occupied with complicated machining tasks or if large areas are being machined. Example: Multipass milling over the entire blank form with a large tool. The TNC interrupts the graphics and displays the text **ERROR** in the graphics window. The machining process is continued, however.

In the test run graphics, the TNC does not depict multi-axis operations during machining. The error message **Axis cannot be shown** appears in the graphics window in such cases.

Plan view

This is the fastest of the graphic display modes.

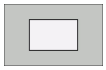

- Press the soft key for plan view
- Regarding depth display, remember: The deeper the surface, the darker the shade

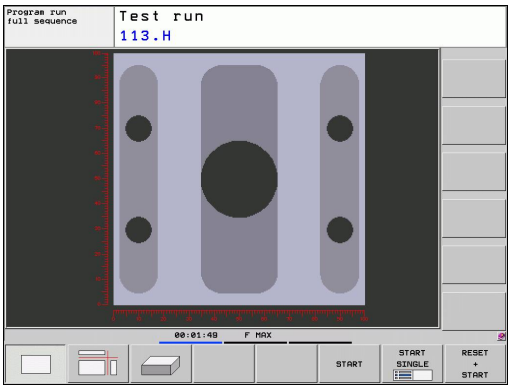

Projection in three planes

Similar to a workpiece drawing, the part is displayed with a plan view and two sectional planes. A symbol to the lower left indicates whether the display is in first angle or third angle projection according to ISO 5456-2 (selected with MP7310).

Details can be isolated in this display mode for magnification (See "Magnifying details", page 444).

In addition, you can shift the sectional planes with the corresponding soft keys:

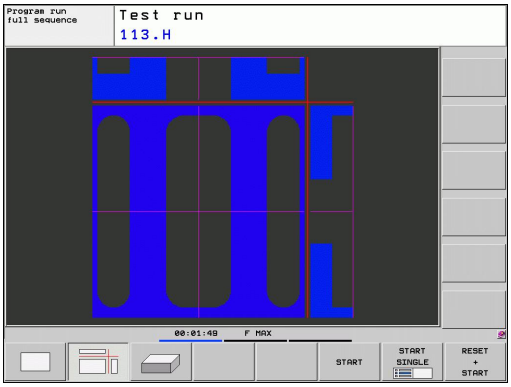

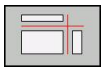

- Select the soft key for projection in three planes.

- Shift the soft-key row until the soft key for the functions for shifting the sectional plane appears

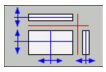

- Select the functions for shifting the sectional plane. The TNC offers the following soft keys:

Function	Soft keys
Shift the vertical sectional plane to the right or left	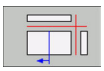 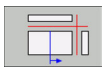
Shift the vertical sectional plane forward or backward	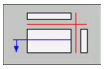 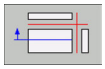
Shift the horizontal sectional plane upwards or downwards	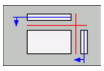 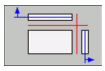

The positions of the sectional planes are visible during shifting.

The default setting of the sectional plane is selected such that it lies in the working plane in the workpiece center and in the tool axis on the top surface.

3-D view

The workpiece is displayed in three dimensions.

You can rotate the 3-D display about the vertical and horizontal axes via soft keys. If there is a mouse attached to your TNC, you can also perform this function by holding down the right mouse button and dragging the mouse.

The shape of the workpiece can be depicted by a frame overlay at the beginning of the graphic simulation.

In the Test Run mode of operation you can isolate details for magnification, See "Magnifying details", page 444.

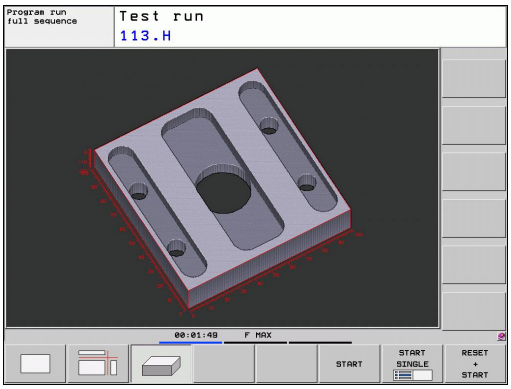

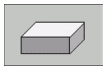

- Press the soft key for 3-D view.

The speed of the 3-D graphics depends on the tooth length (**LCUTS** column in the tool table). If **LCUTS** is defined as 0 (basic setting), the simulation calculates an infinitely long tooth length, which leads to a long processing time.

Rotating and magnifying/reducing the 3-D view

- Shift the soft-key row until the soft key for the rotating and magnification/reduction appears

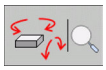

- Select functions for rotating and magnifying/reducing:

Function	Soft keys
Rotate in 5° steps about the vertical axis	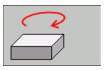 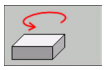
Tilt in 5° steps about the horizontal axis	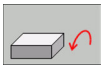 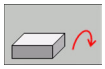
Magnify the graphic stepwise If the view is magnified, the TNC shows the letter **Z** in the footer of the graphic window	
Reduce the graphic stepwise If the view is reduced, the TNC shows the letter **Z** in the footer of the graphic window	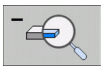
Reset image to programmed size	

If there is a mouse attached to your TNC, you can also perform the functions described above with the mouse:

- In order to rotate the graphic shown in three dimensions: Hold the right mouse button down and move the mouse. After you release the right mouse button, the TNC orients the workpiece to the defined orientation
- In order to shift the graphic shown: Hold the center mouse button or the wheel button down and move the mouse. The TNC shifts the workpiece in the corresponding direction. After you release the center mouse button, the TNC shifts the workpiece to the defined position
- In order to zoom in on a certain area with the mouse: Draw a rectangular zoom area while holding the left mouse button down. After you release the left mouse button, the TNC zooms in on the defined area of the workpiece
- In order to quickly zoom in and out with the mouse: Rotate the wheel button forward or backward

Magnifying details

You can magnify details in all display modes in the Test Run mode and a Program Run mode.

The graphic simulation or the program run, respectively, must first have been stopped. A detail magnification is always effective in all display modes.

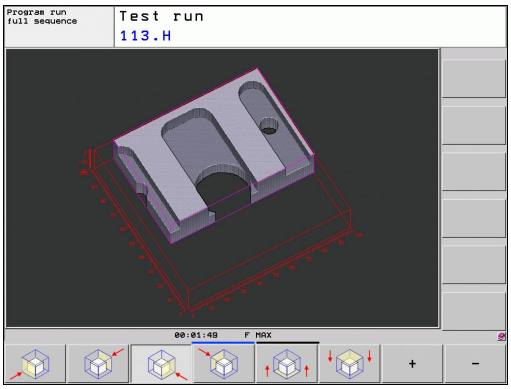

Changing the detail magnification

The soft keys are listed in the table

- Interrupt the graphic simulation, if necessary
- Shift the soft-key row in the Test Run mode, or in a Program Run mode, respectively, until the soft key for detail magnification appears

- Shift the soft-key row until the soft-key for the detail magnification functions appears

- Select the functions for detail magnification
- Press the corresponding soft key to select the workpiece surface (see table below)
- To reduce or magnify the blank form, press and hold the MINUS or PLUS soft key, respectively
- Restart the test run or program run by pressing the START soft key (RESET + START returns the workpiece to its original state)

Function	Soft keys	
Select the left/right workpiece surface	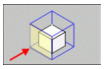	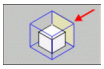
Select the front/back workpiece surface	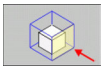	
Select the top/bottom workpiece surface	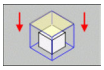	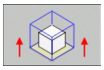
Shift the cutting surface for reducing or magnifying the blank form	–	+
Select the isolated detail	TRANSFER DETAIL	

> After a new workpiece detail magnification is selected, the control "forgets" previously simulated machining operations. The TNC then displays machined areas as unmachined areas.
>
> If the workpiece blank cannot be further enlarged or reduced, the TNC displays an error message in the graphics window. To clear the error message, reduce or enlarge the workpiece blank.

Repeating graphic simulation

A part program can be graphically simulated as often as desired, either with the complete workpiece or with a detail of it.

Function	Soft key
Restore workpiece to the detail magnification in which it was last shown	RESET BLK FORM
Reset detail magnification so that the machined workpiece or workpiece blank is displayed as it was programmed with BLK FORM	WINDOW BLK FORM

> With the WINDOW BLK FORM soft key, you return the displayed workpiece blank to its originally programmed dimensions, even after isolating a detail without TRANSFER DETAIL.

Tool display

You can display the tool during simulation in the plan view and in the projection in three planes. The TNC depicts the tool in the diameter defined in the tool table.

Function	Soft key
Do not display the tool during simulation	TOOLS DISPLAY HIDE
Display the tool during simulation	TOOLS DISPLAY HIDE

Measurement of machining time

Program Run modes of operation

The timer counts and displays the time from program start to program end. The timer stops whenever machining is interrupted.

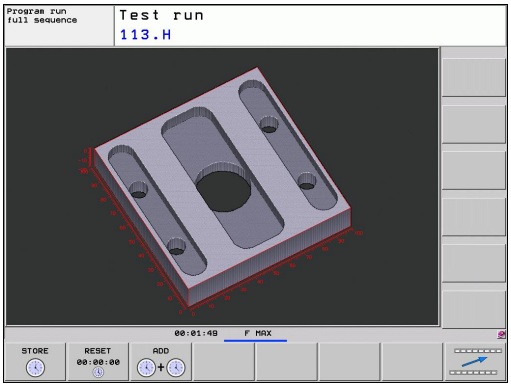

Test Run

The timer displays the time that the TNC calculates for the duration of tool movements that are executed at feed rate. Dwell times are included in the calculation by the TNC. The time calculated by the TNC can only conditionally be used for calculating the production time because the TNC does not account for the duration of machine-dependent interruptions, such as tool change.

Activating the stopwatch function

- Shift the soft-key row until the soft-key for the stopwatch functions appears

- Select the stopwatch functions

- Select the desired function by soft key, e.g. saving the displayed time

Stopwatch functions	Soft key
Store displayed time	STORE
Display the sum of stored time and displayed time	ADD
Clear displayed time	RESET 00:00:00

During the test run, the TNC resets the machining time as soon as a new **BLK FORM** is evaluated.

14.2 Showing the workpiece blank in the working space

Application

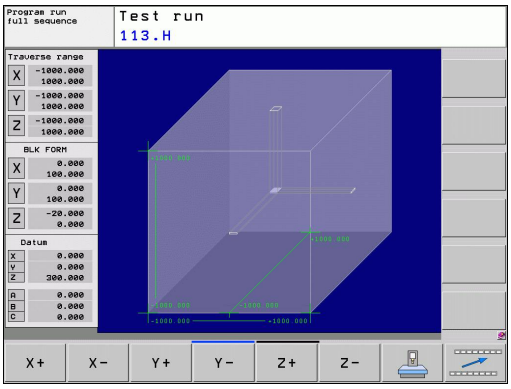

This MOD function enables you to graphically check the position of the workpiece blank or reference point in the machine's working space and to activate work space monitoring in the Test Run mode of operation. This function is activated with the **BLANK IN WORKSPACE** soft key. You can activate or deactivate the function with the **SW limit monitoring** soft key (2nd soft-key row).

Another transparent cuboid represents the workpiece blank. Its dimensions are shown in the **BLK FORM** table. The TNC takes the dimensions from the workpiece blank definition of the selected program. The workpiece cuboid defines the coordinate system for input. Its datum lies within the traverse-range cuboid.

For a test run it normally does not matter where the workpiece blank is located within the working space. However, if you activate working-space monitoring, you must graphically shift the workpiece blank so that it lies within the working space. Use the soft keys shown in the table.

You can also activate the current datum for the Test Run operating mode (see the last line of the following table).

Function	Soft keys	
Shift workpiece blank in positive/negative X direction	X+	X-
Shift workpiece blank in positive/negative Y direction	Y+	Y-
Shift workpiece blank in positive/negative Z direction	Z+	Z-
Show workpiece blank referenced to the set datum		
Switch monitoring function on or off	SW limit monitoring	

14.3 Functions for program display

Overview

In the Program Run modes of operation as well as in the Test Run mode, the TNC provides the following soft keys for displaying a part program in pages:

Functions	Soft key
Go back in the program by one screen	
Go forward in the program by one screen	
Go to the start of the program	
Go to the end of the program	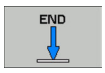

14.4 Test Run

Application

In the Test Run mode of operation you can simulate programs and program sections to reduce programming errors during program run. The TNC checks the programs for the following:

- Geometrical incompatibilities
- Missing data
- Impossible jumps
- Violation of the machine's working space

The following functions are also available:

- Blockwise test run
- Interruption of test at any block
- Optional block skip
- Functions for graphic simulation
- Measure machining time
- Additional status display

Danger of collision!

The TNC cannot graphically simulate all traverse motions actually performed by the machine. These include

- Traverse motions during tool change, if the machine manufacturer defined them in a tool-change macro or via the PLC
- Positioning movements that the machine manufacturer defined in an M-function macro
- Positioning movements that the machine manufacturer performs via the PLC

HEIDENHAIN therefore recommends proceeding with caution for every new program, even when the program test did not output any error message, and no visible damage to the workpiece occurred.

After a tool call, the TNC always starts a program test at the following position:

- In the machining plane at the position X=0, Y=0
- In the tool axis, 1 mm above the **MAX** point defined in the **BLK FORM**

If you call the same tool, the TNC resumes program simulation from the position last programmed before the tool call.

In order to ensure unambiguous behavior during program run, after a tool change you should always move to a position from which the TNC can position the tool for machining without causing a collision.

Your machine tool builder can also define a tool-change macro for the Test Run operating mode. This macro will simulate the exact behavior of the machine. Refer to your machine manual.

Execute test run

If the central tool file is active, a tool table must be active (status S) to conduct a test run. Select a tool table via the file manager (PGM MGT) in the Test Run mode of operation

With the BLANK IN WORK SPACE function, you activate working space monitoring for the test run, See "Showing the workpiece blank in the working space ", page 447.

- Select the Test Run operating mode
- Call the file manager with the PGM MGT key and select the file you wish to test, or
- Go to the program beginning: Select line 0 with the GOTO key and confirm your entry with the ENT key

The TNC then displays the following soft keys:

Functions	Soft key
Reset the blank form and test the entire program	RESET + START
Test the entire program	START
Test each program block individually	START SINGLE
Halt test run (soft key only appears once you have started the test run)	STOP

You can interrupt the test run and continue it again at any point —even within a fixed cycle. In order to continue the test, the following actions must not be performed:

- Selecting another block with the arrow keys or the GOTO key
- Making changes to the program
- Switching the operating mode
- Selecting a new program

14.5 Program run

Application

In the Program Run, Full Sequence mode of operation the TNC executes a part program continuously to its end or up to a program stop.

In the Program Run, Single Block mode of operation you must start each block separately by pressing the machine START button.

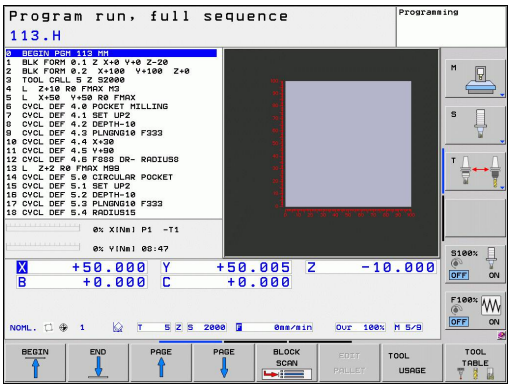

The following TNC functions are available in the program run modes of operation:

- Interrupt program run
- Starting the program run from a certain block
- Optional block skip
- Editing the tool table TOOL.T
- Checking and changing Q parameters
- Superimposing handwheel positioning
- Functions for graphic simulation
- Additional status display

Running a part program

Preparation

1 Clamp the workpiece to the machine table.
2 Set the datum
3 Select the necessary tables and pallet files (status M).
4 Select the part program (status M).

You can adjust the feed rate and spindle speed with the override knobs.

It is possible to reduce the feed rate when starting the NC program using the FMAX soft key. The reduction applies to all rapid traverse and feed rate movements. The value you enter is no longer in effect after the machine has been turned off and on again. In order to re-establish the respectively defined maximum feed rate after switch-on, you need to re-enter the corresponding value.

The behavior of this function varies depending on the respective machine. Refer to your machine manual.

Program Run, Full Sequence

- Start the part program with the machine START button

Program Run, Single Block

- Start each block of the part program individually with the machine START button

Interrupt machining

There are several ways to interrupt a program run:

- Programmed interruptions
- Pressing the machine STOP button
- Switching to Program Run, Single Block

If the TNC registers an error during program run, it automatically interrupts the machining process.

Programmed interruptions

You can program interruptions directly in the part program. The TNC interrupts the program run at a block containing one of the following entries:

- **STOP** (with and without miscellaneous function)
- Miscellaneous function **M0**, **M2** or **M30**
- Miscellaneous function **M6** (determined by the machine tool builder)

Interruption through the machine STOP button

- Press the machine STOP button: The block that the TNC is currently executing is not completed. The NC stop signal in the status display blinks (see table)
- If you do not wish to continue the machining process, you can reset the TNC with the INTERNAL STOP soft key. The NC stop signal in the status display goes out. In this case, the program must be restarted from the program beginning

Icon	Meaning
	Program run is stopped

Interruption of machining by switching to the Program Run, Single Block mode of operation.

You can interrupt a program that is being run in the Program Run, Full Sequence mode of operation by switching to the Program Run, Single Block mode. The TNC interrupts the machining process at the end of the current block.

Moving the machine axes during an interruption

You can move the machine axes during an interruption in the same way as in the Manual Operation mode.

Danger of collision!

If you interrupt program run while the working plane is tilted, you can switch the coordinate system between tilted and non-tilted, as well as to the active tool axis direction, by pressing the 3-D ROT soft key.

The functions of the axis direction buttons, the electronic handwheel and the positioning logic for returning to the contour are then evaluated by the TNC. When retracting the tool make sure the correct coordinate system is active and the angular values of the tilt axes are entered in the 3-D ROT menu, if necessary.

Example:
Retracting the spindle after tool breakage

- Interrupt machining
- Enable the external direction keys: Press the MANUAL TRAVERSE soft key
- Move the axes with the machine axis direction buttons.

On some machines you may have to press the machine START button after the MANUAL OPERATION soft key to enable the axis direction buttons. Refer to your machine manual.

Resuming program run after an interruption

If you cancel a program with INTERNAL STOP, you have to start the program with the RESTORE POS. AT N function or with GOTO "0".

If a program run is interrupted during a fixed cycle, the program must be resumed from the beginning of the cycle. This means that some machining operations will be repeated.

If you interrupt a program run during execution of a subprogram or program section repeat, use the RESTORE POS AT N function to return to the position at which the program run was interrupted.

14.5 Program run

When a program run is interrupted, the TNC stores:

- The data of the last defined tool
- Active coordinate transformations (e.g. datum shift, rotation, mirroring)
- The coordinates of the circle center that was last defined

> Note that the stored data remain active until they are reset (e.g. if you select a new program).

The stored data are used for returning the tool to the contour after manual machine axis positioning during an interruption (RESTORE POSITION soft key).

Resuming program run with the START button

You can resume program run by pressing the machine START button if the program was interrupted in one of the following ways:

- Machine STOP button pressed
- Programmed interruption

Resuming program run after an error

If the error message is not blinking:

- Remove the cause of the error
- Clear the error message from the screen: Press the CE key
- Restart the program, or resume program run where it was interrupted

If the error message is blinking

- Press and hold the END key for two seconds. This induces a TNC system restart
- Remove the cause of the error
- Restart

If you cannot correct the error, write down the error message and contact your service agency

Any entry into program (mid-program startup)

The RESTORE POS AT N feature must be enabled and adapted by the machine tool builder. Refer to your machine manual.

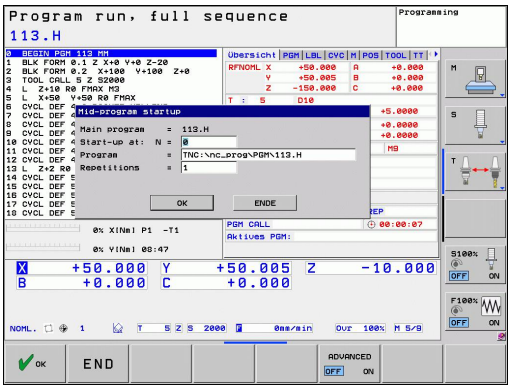

With the RESTORE POS AT N feature (block scan) you can start a part program at any block you desire. The TNC scans the program blocks up to that point. Machining can be graphically simulated.

If you have interrupted a part program with an INTERNAL STOP, the TNC automatically offers the interrupted block N for mid-program startup.

Mid-program startup must not begin in a subprogram.

All necessary programs, tables and pallet files must be selected in a program run mode of operation (status M).

If the program contains a programmed interruption before the startup block, the block scan is interrupted. Press the machine START button to continue the block scan.

After a block scan, return the tool to the calculated position with RESTORE POSITION.

Tool length compensation does not take effect until after the tool call and a following positioning block. This also applies if you have only changed the tool length.

The TNC skips all touch probe cycles in a mid-program startup. Result parameters that are written to from these cycles might therefore remain empty.

You may not use mid-program startup if the following occurs after a tool change in the machining program:

- The program is started in an FK sequence
- The stretch filter is active
- Pallet management is used
- The program is started in a threading cycle (Cycles 17, 18, 19, 206, 207 and 209) or the subsequent program block
- Touch-probe cycles 0, 1 and 3 are used before program start

- Go to the first block of the current program to start a block scan: Enter GOTO "0"

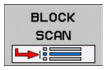

- Select mid-program startup: Press the MID-PROGRAM STARTUP soft key
- **Start-up at N**: Enter the block number N at which the block scan should end
- **Program**: Enter the name of the program containing block N
- **Repetitions**: If block N is located in a program section repeat or in a subprogram that is to be run repeatedly, enter the number of repetitions to be calculated in the block scan
- Start mid-program startup: Press the machine START button
- Contour approach (see following section)

Entering a program with the GOTO key

If you use the GOTO block number key for going into a program, neither the TNC nor the PLC will execute any functions that ensure a safe start.

If you use the GOTO block number key for going into a subprogram,

- the TNC will skip the end of the subprogram (**LBL 0**)
- the TNC will reset function M126 (Shorter-path traverse of rotary axes)

In such cases you must always use the mid-program startup function.

Returning to the contour

With the RESTORE POSITION function, the TNC returns to the workpiece contour in the following situations:

- Return to the contour after the machine axes were moved during a program interruption that was not performed with the INTERNAL STOP function
- Return to the contour after a block scan with RESTORE POS AT N, for example after an interruption with INTERNAL STOP
- Depending on the machine, if the position of an axis has changed after the control loop has been opened during a program interruption

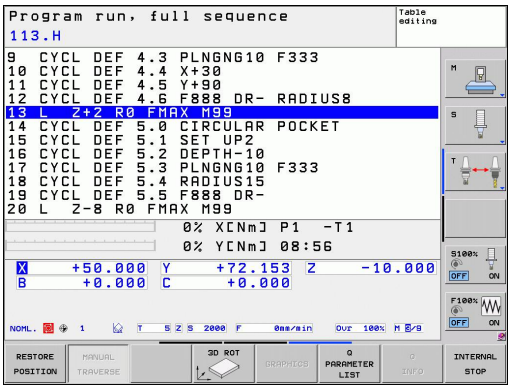

- ▶ To select a return to contour, press the RESTORE POSITION soft key
- ▶ Restore machine status, if required
- ▶ To move the axes in the sequence that the TNC suggests on the screen, press the machine START button, or
- ▶ To move the axes in any sequence, press the soft keys RESTORE X, RESTORE Z, etc., and activate each axis with the machine START button
- ▶ To resume machining, press the machine START button

14.6 Automatic program start

Application

The TNC must be specially prepared by the machine tool builder for use of the automatic program start function. Refer to your machine manual.

Caution: Danger for the operator!

The autostart function must not be used on machines that do not have an enclosed working space.

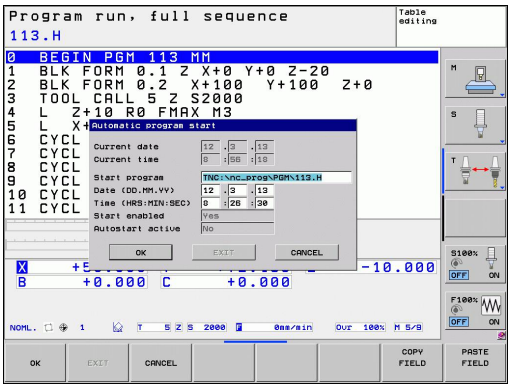

In a Program Run operating mode, you can use the AUTOSTART soft key (see figure at upper right) to define a specific time at which the program that is currently active in this operating mode is to be started:

- Show the window for entering the starting time (see figure at center right)
- **Time (h:min:sec)**: Time of day at which the program is to be started
- **Date (DD.MM.YYYY)**: Date at which the program is to be started
- To activate the start, press the OK soft key

14.7 Optional block skip

Application

In a test run or program run, the control can skip over blocks that begin with a slash "/":

- To run or test the program without the blocks preceded by a slash, set the soft key to ON

- To run or test the program with the blocks preceded by a slash, set the soft key to OFF

> This function does not work for **TOOL DEF** blocks.
> After a power interruption the TNC returns to the most recently selected setting.

Inserting the "/" character

- In the **Programming** mode you select the block in which the character is to be inserted

- Select the INSERT soft key

Erasing the "/" character

- In the **Programming** mode you select the block in which the character is to be deleted

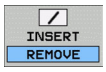

- Select the REMOVE soft key

14.8 Optional program-run interruption

Application

The TNC optionally interrupts program run at blocks containing M1. If you use M1 in the Program Run mode, the TNC does not switch off the spindle or coolant.

- Do not interrupt program run or test run at blocks containing M1: Set soft key to OFF

- Interrupt program run or test run at blocks containing M1: Set soft key to ON

15

MOD functions

15.1 MOD function

The MOD functions provide additional input possibilities and displays. In addition you can enter code numbers to enable access to protected areas.

Selecting MOD functions

Open the pop-up window with the MOD functions:

- To select the MOD functions, press the MOD key. The TNC opens a pop-up window displaying the available MOD functions.

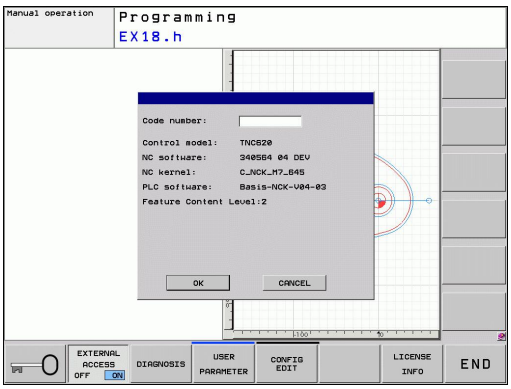

Changing the settings

As well as with the mouse, navigation with the keyboard is also possible in the MOD functions:

- Switch from the input area in the right window to the MOD function selections in the left window with the tab key
- Select MOD function
- Switch to the input field with the tab key or ENT key
- Enter value according to function and confirm with **OK** or make selection and confirm with **Apply**

> ⇨ If more than one possibility is available for a particular setting, you can superimpose a window listing all of the given possibilities by pressing the GOTO key. Select the setting with the ENT key. If you don't want to change the setting, close the window again with END.

Exiting MOD functions

- Exit MOD functions: press the ABORT soft key or END key

Overview of MOD functions

The following functions are available independent of the selected operating mode:

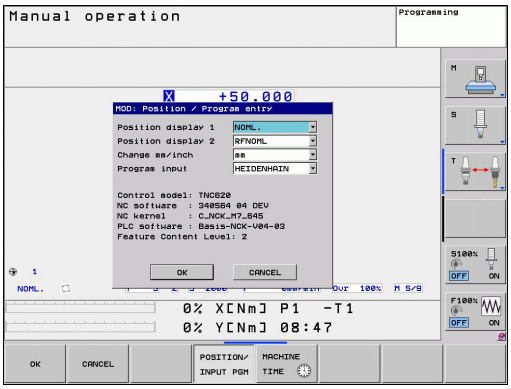

Code-number entry

- Enter code number

Display settings

- Select position displays
- Defining the unit of measurement (mm/inches) for position display
- Setting programming language for MDI
- Display of time
- Show the info line

Machine settings

- Selecting the machine kinematics

Diagnostic functions

- Profibus diagnosis
- Network information
- HeROS information

General information

- Software version
- FCL information
- License information
- Machine times

15.2 Position Display Types

Application

In the Manual Operation mode and in the Program Run modes of operation, you can select the type of coordinates to be displayed.

The figure at right shows the different tool positions:

- Starting position
- Target position of the tool
- Workpiece datum
- Machine datum

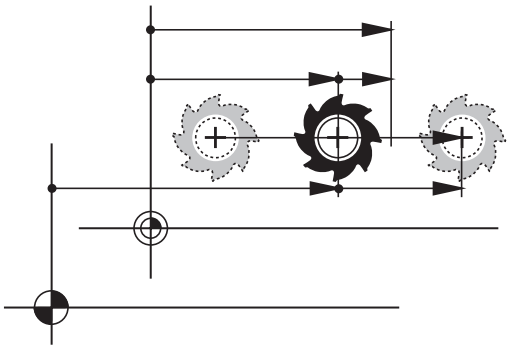

The TNC position displays can show the following coordinates:

Function	Display
Nominal position: the value presently commanded by the TNC	NOML.
Actual position; current tool position	ACTL.
Reference position; the actual position relative to the machine datum	REF ACTL
Reference position; the nominal position relative to the machine datum	REF NOML
Servo lag; difference between nominal and actual positions (following error)	LAG
Distance remaining to the programmed position; difference between actual and target positions	DIST

With the MOD function **Position display 1**, you can select the position display in the status display.

With the MOD function **Position display 2**, you can select the position display in the status display.

15.3 Unit of Measurement

Application

This MOD function determines whether the coordinates are displayed in millimeters (metric system) or inches.

- To select the metric system (e.g. X = 15.789 mm), set the Change MM/INCH function to mm. The value is displayed to 3 decimal places.
- To select the inch system (e.g. X = 0.6216 inches), set the Change MM/INCH function to inches. The value is displayed to 4 decimal places

If you would like to activate the inch display, the TNC shows the feed rate in inch/min. In an inch program you must enter the feed rate larger by a factor of 10.

15.4 Displaying operating times

Application

The MACHINE TIME soft key enables you to see various types of operating times:

Operating time	Meaning
Control on	Operating time of the control since being put into service
Machine on	Operating time of the machine tool since being put into service
Program run	Duration of controlled operation since being put into service

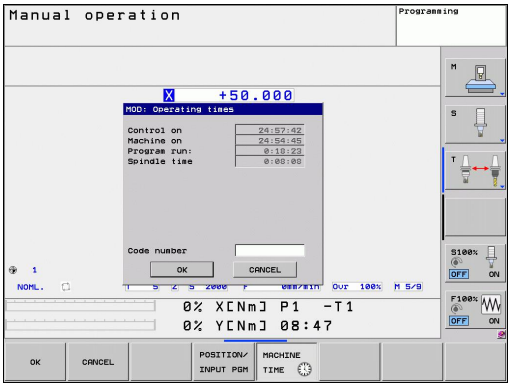

The machine tool builder can provide further operating time displays. Refer to your machine manual.

15.5 Software numbers

Application

The following software numbers are displayed on the TNC screen after the "Software version" MOD function has been selected:

- **Control model**: Designation of the control (managed by HEIDENHAIN)
- **NC software**: Number of the NC software (managed by HEIDENHAIN)
- **NCK**: Number of the NC software (managed by HEIDENHAIN)
- **PLC software**: Number or name of the PLC software (managed by your machine tool builder)

In the "FCL information" MOD function, the TNC shows the following information:

- **Development level (FCL=Feature Content Level):** Development level of the software installed on the control, See "Feature Content Level (upgrade functions)", page 9

15.6 Entering the code number

Application

The TNC requires a code number for the following functions:

Function	Code number
Selecting user parameters	123
Configuring an Ethernet card	NET123
Enabling special functions for Q parameter programming	555343

15.7 External access

Application

The machine tool builder can configure the external access options. Refer to your machine manual.

The soft key SERVICE can be used to grant or restrict access through the LSV-2 interface.

Permitting/Restricting external access:

- Select the **Programming** mode of operation
- Press the MOD key to select the MOD function

- Permit a connection to the TNC: Set the EXTERNAL ACCESS soft key to ON. The TNC will then permit data access through the LSV-2 interface.
- Block connections to the TNC: Set the EXTERNAL ACCESS soft key to OFF. The TNC will then block access through the LSV-2 interface

15.8 Setting up data interfaces

Serial interfaces on the TNC 320

The TNC 320 automatically uses the LSV2 transmission protocol for serial data transfer. The LSV2 protocol is permanent and cannot be changed except for setting the baud rate (machine parameter **baudRateLsv2**). You can also specify another type of transmission (interface). The settings described below are therefore effective only for the respective newly defined interface.

Application

To set up a data interface, select the file management (PGM MGT) and press the MOD key. Press the MOD key again and enter the code number 123. The TNC shows the user parameter **GfgSerialInterface**, in which you can enter the following settings:

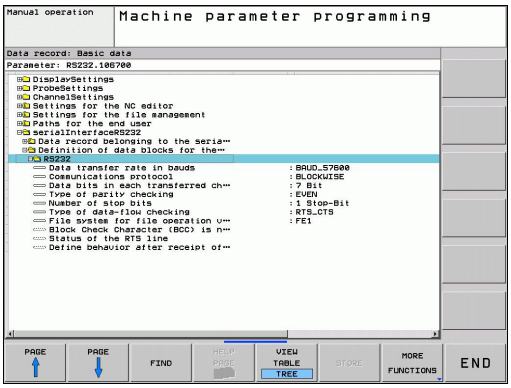

Setting the RS-232 interface

Open the RS232 folder. The TNC then displays the following settings:

Setting the BAUD RATE (baudRate)

You can set the BAUD RATE (data transfer speed) from 110 to 115 200 baud.

Setting the protocol (protocol)

The data transfer protocol controls the data flow of a serial transmission (comparable to MP5030 of the iTNC 530).

> Here, the BLOCKWISE setting designates a form of data transfer where data is transmitted in blocks. This is not to be confused with the blockwise data reception and simultaneous blockwise processing by older TNC contouring controls. Blockwise reception of an NC program and simultaneous machining of the program is not possible!

Data transmission protocol	Selection
Standard data transmission (transmission line-by-line)	STANDARD
Packet-based data transfer	BLOCKWISE
Transmission without protocol (only character-by-character)	RAW_DATA

Setting data bits (dataBits)

By setting the data bits you define whether a character is transmitted with 7 or 8 data bits.

Check parity (parity)

The parity bit helps the receiver to detect transmission errors. The parity bit can be formed in three different ways:

- No parity (NONE): There is no error detection
- Even parity (EVEN): Here there is an error if the receiver finds that it has received an odd number of set bits
- Odd parity (ODD): Here there is an error if the receiver finds that it has received an even number of set bits

Setting the stop bits (stopBits)

The start bit and one or two stop bits enable the receiver to synchronize to every transmitted character during serial data transmission.

Setting handshaking (flowControl)

By handshaking, two devices control data transfer between them. A distinction is made between software handshaking and hardware handshaking.

- No data flow checking (NONE): Handshaking is not active
- Hardware handshaking (RTS_CTS): Transmission stop is active through RTS
- Software handshaking (XON_XOFF): Transmission stop is active through DC3 (XOFF)

File system for file operations (fileSystem)

In **fileSystem** you define the file system for the serial interface. This machine parameter is not required if you don't need a special file system.

- EXT: Minimum file system for printers or non-HEIDENHAIN transmission software. Corresponds to the EXT1 and EXT2 modes of earlier TNC controls.
- FE1: Communication with the TNCserver PC software or an external floppy disk unit.

Settings for data transfer with the TNCserver PC software

Enter the following settings in the user parameters (**serialInterfaceRS232 / definition of data blocks for the serial ports / RS232**):

Parameters	Selection
Data transfer rate in baud	Has to match the setting in TNCserver
Data transmission protocol	BLOCKWISE
Data bits in each transferred character	7 bits
Type of parity checking	EVEN
Number of stop bits	1 stop bit
Specify type of handshake:	RTS_CTS
File system for file operations	FE1

Setting the operating mode of the external device (fileSystem)

The functions "Transfer all files," "Transfer selected file," and "Transfer directory" are not available in the FE2 and FEX modes.

External device	Operating mode	Icon
PC with HEIDENHAIN data transfer software TNCremoNT	LSV2	
HEIDENHAIN floppy disk units	FE1	
Non-HEIDENHAIN devices such as printers, scanners, punchers, PC without TNCremoNT	FEX	

Data transfer software

For transfer of files to and from the TNC, we recommend using the HEIDENHAIN TNCremo data transfer software. With TNCremo, data transfer is possible with all HEIDENHAIN controls via the serial interface or the Ethernet interface.

> ⇨ You can download the current version of TNCremo free of charge from the HEIDENHAIN Filebase (www.heidenhain.de, Services and Documentation, Software, PC Software, TNCremoNT).

System requirements for TNCremo:

- PC with 486 processor or higher
- Windows 95, Windows 98, Windows NT 4.0, Windows 2000, Windows XP, Windows Vista operating systems
- 16 MB RAM
- 5 MB free memory space on your hard disk
- An available serial interface or connection to the TCP/IP network

Installation under Windows

- Start the SETUP.EXE installation program with the file manager (Explorer)
- Follow the setup program instructions

Starting TNCremoNT under Windows

- Click on <Start>, <Programs>, <HEIDENHAIN Applications>, <TNCremo>

When you start TNCremo for the first time, TNCremo automatically tries to set up a connection with the TNC.

Data transfer between the TNC and TNCremoNT

> Before you transfer a program from the TNC to the PC, you must make absolutely sure that you have already saved the program currently selected on the TNC. The TNC saves changes automatically when you switch the mode of operation on the TNC, or when you select the file manager via the PGM MGT key.

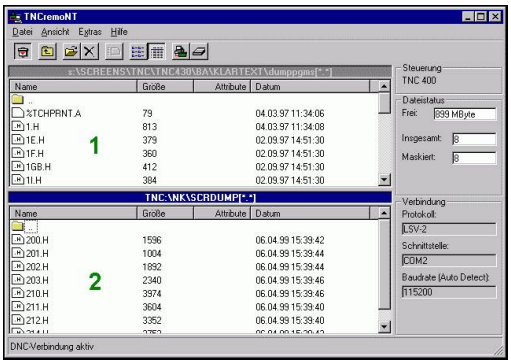

Check whether the TNC is connected to the correct serial port on your PC or to the network.

Once you have started TNCremoNT, you will see a list of all files that are stored in the active directory in the upper section of the main window **1**. Using <File>, <Change directory>, you can select any drive or another directory on your PC.

If you want to control data transfer from the PC, establish the connection with your PC in the following manner:

- Select <File>, <Setup connection>. TNCremoNT now receives the file and directory structure from the TNC and displays this at the bottom left of the main window **2**
- To transfer a file from the TNC to the PC, select the file in the TNC window with a mouse click and drag and drop the highlighted file into the PC window **1**
- To transfer a file from the PC to the TNC, select the file in the PC window with a mouse click and drag and drop the highlighted file into the TNC window **2**

If you want to control data transfer from the TNC, establish the connection with your PC in the following manner:

- Select <Extras>, <TNCserver>. TNCremoNT is now in server mode. It can receive data from the TNC and send data to the TNC
- You can now call the file management functions on the TNC by pressing the key PGM MGTSee "Data transfer to/from an external data medium", page 110, in order to transfer the desired files

Exiting TNCremoNT

Select <File>, <Exit>

> Refer also to the TNCremoNT context-sensitive help texts where all of the functions are explained in more detail. The help texts must be called with the F1 key.

15.9 Ethernet interface

Introduction

The TNC is shipped with a standard Ethernet card to connect the control as a client in your network. The TNC transmits data via the Ethernet card with

- the **smb** protocol (Server Message Block) for Windows operating systems, or
- the **TCP/IP** protocol family (Transmission Control Protocol/ Internet Protocol) and with support from the NFS (Network File System)

Connection options

You can connect the Ethernet card in your TNC to your network through the RJ45 connection (X26, 100BaseTX or 10BaseT), or directly to a PC. The connection is metallically isolated from the control electronics.

For a 100BaseTX or 10BaseT connection you need a Twisted Pair cable to connect the TNC to your network.

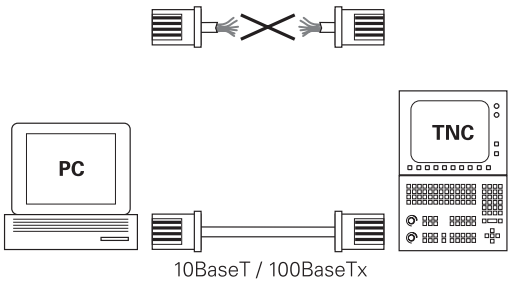

> The maximum cable length between TNC and a node depends on the quality grade of the cable, the sheathing and the type of network (100BaseTX or 10BaseT).
>
> No great effort is required to connect the TNC directly to a PC that has an Ethernet card. Simply connect the TNC (port X26) and the PC with an Ethernet crossover cable (trade names: crossed patch cable or STP cable).

Connecting the Control to the Network

Overview of functions for configuring the network

- In the file manager (PGM MGT), press the **Network** soft key

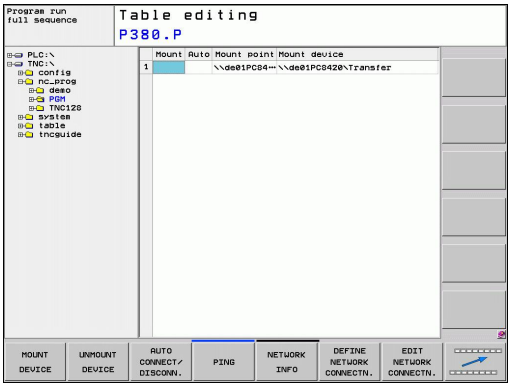

Function	Soft key
Establish the connection to the selected network drive. Successful connection is indicated by a check mark under Mount.	MOUNT DEVICE
Separate the connection to a network drive.	UNMOUNT DEVICE
Activate or deactivate the Automount function (= automatic connection of the network drive during control start-up). The status of the function is indicated by a check mark under Auto in the network drive table.	AUTO MOUNT
Use the ping function to check whether a connection to a particular remote station in the network is available. The address is entered as four decimal numbers separated by points (dotted-decimal notation).	PING
The TNC displays an overview window with information on the active network connections.	NETWORK INFO
Configure the access to network drives. (Selectable only after entry of the MOD code number NET123)	DEFINE NETWORK CONNECTN.
Open the dialog window for editing the data of an existing network connection. (Selectable only after entry of the MOD code number NET123)	EDIT NETWORK CONNECTN.
Configure the network address of the control. (Selectable only after entry of the MOD code number NET123)	CONFIGURE NETWORK
Delete an existing network connection. (Selectable only after entry of the MOD code number NET123)	DELETE NETWORK CONNECTN.

Configuring the control's network address

- Connect the TNC (port X26) with a network or a PC
- In the file manager (PGM MGT), select the **Network** soft key
- Press the MOD key. Then enter the code number **NET123**.
- Press the **CONFIGURE NETWORK** soft key to enter the network setting for a specific device (see figure at center right)
- The dialog window for the network configuration opens

Setting	Meaning
HOSTNAME	Name under which the control logs onto the network. If you use a host-name server, you must enter the "Fully Qualified Host Name" here. If you do not enter a name here, the control uses the so-called null authentication.
DHCP	DHCP = Dynamic Host Configuration Protocol. In the drop-down menu, set **YES**. Then the control automatically draws its network address (IP address), subnet mask, default router and any broadcast address from a DHCP server in the network. The DHCP server identifies the control by its host name. Your company network must be specially prepared for this function. Contact your network administrator.
IP ADDRESS	Network address of the control: In each of the four adjacent input fields you can enter three digits of the IP address. To move to the next field, press the ENT key. Your network specialist can give you a network address for the control.
SUBNET MASK	Serves to differentiate between the network ID and the host ID of the network: Your network specialist assigns the subnet mask of the control.

Setting	Meaning
BROADCAST	The broadcast address of the control is needed only if it is different from the standard setting. The standard setting is formed from the net and host ID, in which all bits are set to 1.
ROUTER	Network address of default router: This entry is required only if your network consists of several subnetworks interconnected by routers.

The entered network configuration does not become effective until the control is rebooted. After the network configuration is concluded with the OK button or soft key, the control asks for confirmation and reboots.

Configuring network access to other devices (mount)

Make sure that the person configuring your TNC is a network specialist.

Not all Windows operating systems require entry of the **username**, **workgroup** and **password** parameters.

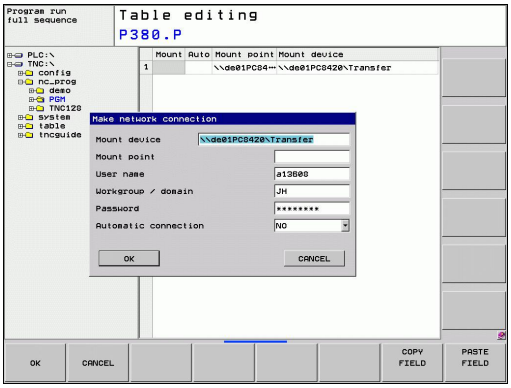

- Connect the TNC (port X26) with a network or a PC
- In the file manager (PGM MGT), select the **Network** soft key
- Press the MOD key. Then enter the code number **NET123**.
- Press the **DEFINE NETWORK CONNECTN** soft key.
- The dialog window for the network configuration opens

Setting	Meaning
Mount device	■ Connection over NFS: Directory name to be mounted. This is formed from the network address of the device, a colon, a slash and the name of the directory. Entry of the network address as four decimal numbers separated by points (dotted-decimal notation), e.g. 160.1.180.4:/PC. When entering the path name, pay attention to capitalization. ■ To connect individual Windows computers via SMB: Enter the network name and the share name of the computer, e.g. \\PC1791NT\PC
Mount point	Device name: The device name entered here is displayed on the control in the program management for the mounted network, e.g. WORLD: (The name must end with a colon!)
File system	File system type: ■ NFS: Network File System ■ SMB: Windows network
NFS option	**rsize**: Packet size in bytes for data reception **wsize**: Packet size for data transmission in bytes **time0=**: Time in tenths of a second, after which the control repeats an unanswered Remote Procedure Call. **soft**: If **YES** is entered, the Remote Procedure Call is repeated until the NFS server answers. If **NO** is entered, it is not repeated.

Setting	Meaning
SMB option	Options that concern the SMB file system type: Options are given without space characters, separated only by commas. Pay attention to capitalization. Options: **ip**: IP address of the Windows PC to which the control is to be connected **username**: User name with which the control should log in **workgroup**: Workgroup under which the control should log in **password**: Password with which the control is to log on (up to 80 characters) Further SMB options: Input of further options for the Windows network
Automatic connection	Automount (YES or NO): Here you specify whether the network will be automatically mounted when the control starts up. Devices that are not automatically mounted can be mounted anytime in the program management.

You do not need to indicate the protocol with the TNC 320. It uses the communications protocol according to RFC 894.

Settings on a PC with Windows 2000

Prerequisite:
The network card must already be installed on the PC and ready for operation.
If the PC that you want to connect the TNC to is already integrated in your company network, then keep the PC's network address and adapt the TNC's network address accordingly.

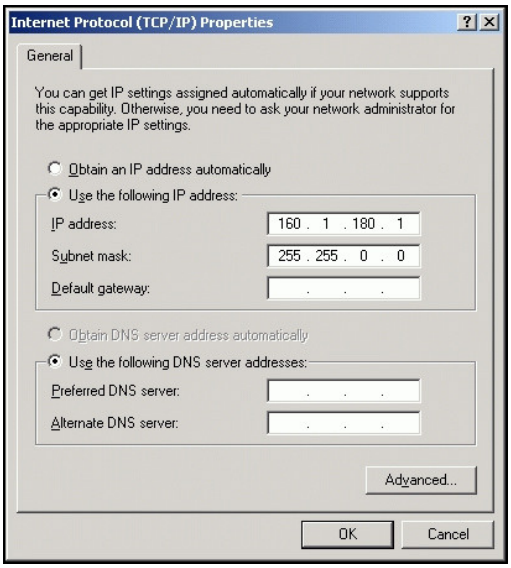

- To open Network Connections, click Start, Settings, and then Network and Dial-up Connections.
- Right-click the LAN connection symbol, and then Properties in the menu that appears
- Double-click Internet Protocol (TCP/IP) to change the IP settings (see figure at top right)
- If it is not yet active, select the Use the following IP address option
- In the input field, enter the same IP address that you entered for the PC network settings on the iTNC, e.g. 160.1.180.1
- Enter 255.255.0.0 in the Subnet mask input field
- Confirm your entries with OK
- Save the network configuration with OK. You may have to restart Windows now

15.10 Configure HR 550 FS wireless handwheel

Application

Press the SET UP WIRELESS HANDWHEEL soft key to configure the HR 550 FS wireless handwheel. The following functions are available:

- Assigning the handwheel to a specific handwheel holder
- Setting the transmission channel
- Analyzing the frequency spectrum for determining the optimum transmission channel
- Select transmitter power
- Statistical information on the transmission quality

Assigning the handwheel to a specific handwheel holder

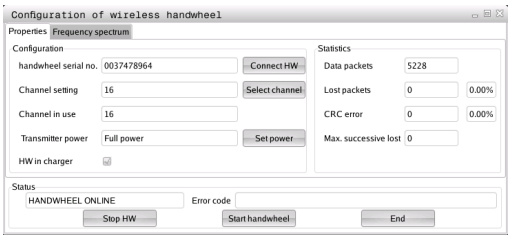

- Make sure that the handwheel holder is connected to the control hardware.
- Place the wireless handwheel you want to assign to the handwheel holder in the handwheel holder
- Press the MOD key to select the MOD function
- Scroll through the soft-key row
    - Select the configuration menu for the wireless handwheel: Press the SET UP WIRELESS HANDWHEEL soft key
    - Click the **Connect HR** button: The TNC saves the serial number of the wireless handwheel located in the handwheel holder and shows it in the configuration window to the left of the **Connect HR** button
    - To save the configuration and exit the configuration menu, press the **END** button

Setting the transmission channel

If the wireless handwheel is started automatically, the TNC tries to select the transmission channel supplying the best transmission signal. If you want to set the transmission channel manually, proceed as follows:

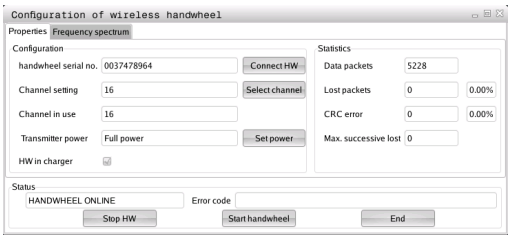

- Press the MOD key to select the MOD function
- Scroll through the soft-key row
  - Select the configuration menu for the wireless handwheel: Press the SET UP WIRELESS HANDWHEEL soft key
  - Click the **Frequency spectrum** tab
  - Click the **Stop HR** button: The TNC stops the connection to the wireless handwheel and determines the current frequency spectrum for all of the 16 available channels
  - Memorize the number of the channel with the least amount of radio traffic (smallest bar)
  - Click the **Start handwheel** button to reactivate the wireless handwheel
  - Click the **Properties** tab
  - Click the **Select channel** button: The TNC shows all available channel numbers. Click the channel number for which the TNC determined the least amount of radio traffic
  - To save the configuration and exit the configuration menu, press the **END** button

Selecting the transmitter power

> Please keep in mind that the transmission range of the wireless handwheel decreases when the transmitter power is reduced.

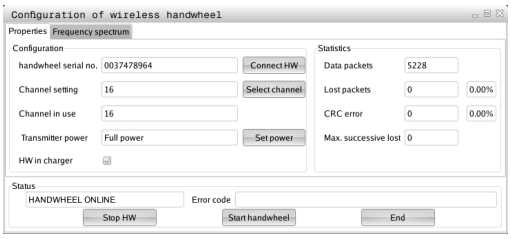

- Press the MOD key to select the MOD function
- Scroll through the soft-key row
  - Select the configuration menu for the wireless handwheel: Press the SET UP WIRELESS HANDWHEEL soft key
  - Click the **Set power** button: The TNC shows the three available power settings. Click the desired setting
  - To save the configuration and exit the configuration menu, press the **END** button

Statistical data

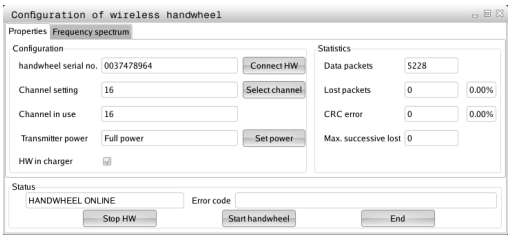

Under **Statistics**, the TNC displays information about the transmission quality.

If the reception quality is poor so that a proper and safe stop of the axes cannot be ensured anymore, an emergency-stop reaction of the wireless handwheel is triggered.

The displayed value **Max. successive lost** indicates whether reception quality is poor. If the TNC repeatedly displays values greater than 2 during normal operation of the wireless handwheel within the desired range of use, then there is a risk of an undesired disconnection. This can be corrected by increasing the transmitter power or by changing to another channel with less radio traffic.

If this occurs, try to improve the transmission quality by selecting another channel (See "Setting the transmission channel", page 484) or by increasing the transmitter power (See "Selecting the transmitter power", page 484).

To display the statistical data, proceed as follows:

- Press the MOD key to select the MOD function
- Scroll through the soft-key row
    - To select the configuration menu for the wireless handwheel, press the SET UP WIRELESS HANDWHEEL soft key: The TNC displays the configuration menu with the statistical data

16

Tables and overviews

16.1 Machine-specific user parameters

Application

The parameter values are entered in the **configuration editor**.

To enable you to set machine-specific functions, your machine tool builder can define which machine parameters are available as user parameters. Furthermore, your machine tool builder can integrate additional machine parameters, which are not described in the following, into the TNC.

Refer to your machine manual.

The machine parameters are grouped as parameter objects in a tree structure in the configuration editor. Each parameter object has a name (e.g. **CfgDisplayLanguage**) that gives information about the parameters it contains. A parameter object, also called "entity", is marked with an "E" in the folder symbol in the tree structure. Some machine parameters have a key name to identify them unambiguously. The key name assigns the parameter to a group (e.g. X for X axis). The respective group folder bears the key name and is marked by a "K" in the folder symbol.

If you are in the configuration editor for the user parameters, you can change the display of the existing parameters. In the default setting, the parameters are displayed with short, explanatory texts. To display the actual system names of the parameters, press the key for the screen layout and then the SHOW SYSTEM NAME soft key. Follow the same procedure to return to the standard display.

Parameters not yet active and objects appear dimmed. These can be activated with the MORE FUNCTIONS and INSERT soft key.

The TNC saves a modification list of the last 20 changes to the configuration data. To restore modifications, select the corresponding line and press the MORE FUNCTIONS and DISCARD CHANGES soft keys.

Calling the configuration editor and changing parameters

- Select the **Programming** mode of operation
- Press the **MOD** key
- Enter the code number **123.**
- Changing Parameters
- Press the **END** soft key to exit the configuration editor
- Press the **SAVE** soft key to save changes

The icon at the beginning of each line in the parameter tree shows additional information about this line. The icons have the following meanings:

- Branch exists but is closed
- Branch is open
- Empty object, cannot be opened
- Initialized machine parameter
- Uninitialized (optional) machine parameter
- Can be read but not edited
- Cannot be read or edited

The type of the configuration object is identified by its folder symbol:

- Key (group name)
- List
- Entity or parameter object

Displaying help texts

The **HELP** key enables you to call a help text for each parameter object or attribute.

If the help text does not fit on one page (1/2 is then displayed at the upper right, for example), press the **HELP PAGE** soft key to scroll to the second page.

To exit the help text, press the **HELP** key again.

Additional information, such as the unit of measure, the initial value, or a selection list, is also displayed. If the selected machine parameter matches a parameter in the TNC, the corresponding MP number is shown.

Parameter list

Parameter settings

DisplaySettings

Settings for screen display

Sequence of displayed axes

[0] to [5]

Depends on available axes

Type of position display in position window

NOMINAL
ACTUAL
REF ACTL
REF NOML
LAG
DIST

Type of position display in position window

NOMINAL
ACTUAL
REF ACTL
REF NOML
LAG
DIST

Definition of decimal separation characters for position display

.

Display of feed rate in Manual Operation mode

at axis key: Only show feed rate when axis-direction key is pressed
always minimum: Always show feed rate

Display of spindle position in the position display

during closed loop: Only show spindle position when spindle is in position control
during closed loop and M5: Show spindle position when spindle is in position control and with M5

Show or hide soft key Preset table

True: Soft key Preset table is not shown
False: Display soft key Preset table

Parameter settings

DisplaySettings

Display step for single axes

List of all available axes

Display step for position display in mm or degrees

0.1
0.05
0.01
0.005
0.001
0.0005
0.0001
0.00005 (display step software option)
0.00001 (display step software option)

Display step for position display in inches

0.005
0.001
0.0005
0.0001
0.00005 (display step software option)
0.00001 (display step software option)

DisplaySettings

Definition of unit of measure valid for the display

metric: Use metric system
inch: Use inch system

DisplaySettings

Format of NC programs and display of cycles

Program input in HEIDENHAIN conversational text or in DIN/ISO

HEIDENHAIN: Program input in BA MDI in conversational text dialog
ISO: Program input in BA MDI in DIN/ISO

Display in cycles

TNC_STD: Display cycles with comment texts
TNC_PARAM: Display cycles without comment texts

Parameter settings

DisplaySettings

Behavior with control start-up

True: Display power interruption message
False: Do not display power interruption message

DisplaySettings

Setting the NC and PLC dialog language

NC dialog language

ENGLISH
GERMAN
CZECH
FRENCH
ITALIAN
SPANISH
PORTUGUESE
SWEDISH
DANISH
FINNISH
DUTCH
POLISH
HUNGARIAN
RUSSIAN
CHINESE
CHINESE_TRAD
SLOVENIAN
ESTONIAN
KOREAN
LATVIAN
NORWEGIAN
ROMANIAN
SLOVAK
TURKISH
LITHUANIAN

PLC dialog language

See NC dialog language

PLC error message language

See NC dialog language

Help language

See NC dialog language

Parameter settings

DisplaySettings

Behavior with control start-up

Acknowledge "Power interruption" message

TRUE: Control start-up is only continued after message acknowledgement
FALSE: "Power interruption" message not displayed

Display of cycles

TNC_STD: Display cycles with comment texts
TNC_PARAM: Display cycles without comment texts

DisplaySettings

Settings for program-run graphics

Type of graphic display

High (compute-intensive): The position of linear and rotary axes is considered in the program-run graphics (3D)
Low: Only the position of linear axes is considered in the program-run graphics (2.5D)
Disabled: Program-run graphics deactivated

ProbeSettings

Configuration of probing behavior

Manual operation: Basic rotation considered

TRUE: Consider active basic rotation with probing
FALSE: Always traverse paraxially during probing

Automatic mode: Multiple measuring with probing functions

1 to 3: Number of probes for each probing routine

Automatic mode: Confidence range for multiple measuring

0.002 to 0.999 [mm]: Range in which the measured value must lie with multiple measuring

Configuration of a round stylus

Coordinates of stylus center point

[0]: X coordinate of the stylus center point with reference to the machine datum
[1]: Y coordinate of the stylus center point with reference to the machine datum
[2]: Z coordinate of the stylus center point with reference to the machine datum

Setup clearance over the stylus for pre-positioning

0.001 to 99 999.9999 [mm]: Setup clearance in the tool axis direction

Clearance zone around the stylus for pre-positioning

0.001 to 99 999.9999 [mm]: Setup clearance in the plane vertically to the tool axis

---

Parameter settings

CfgToolMeasurement

M function for spindle orientation

-1: Spindle orientation directly over NC
0: Function inactive
1 to 999: Number of M function for spindle orientation

Probing direction for tool radius measurement

X_Positive, Y_Positive, X_Negative, Y_Negative (depending on tool axis)

Distance of tool lower edge to stylus upper edge

0.001 to 99.9999 [mm]: Offset of stylus to tool

Rapid traverse in probing cycle

10 to 300 000 [mm/min]: Rapid traverse in probing cycle

Probing feed rate with tool measurement

1 to 3 000 [mm/min]: Probing feed rate with tool measurement

Calculation of probing feed rate

ConstantTolerance: Calculation of probing feed rate with constant tolerance
VariableTolerance: Calculation of probing feed rate with variable tolerance
ConstantFeed: Constant probing feed rate

Max. permissible rotation speed on the tool tip

1 to 129 [m/min]: Permissible rotation speed on mill circumference

Maximum permissible speed for tool measurement

0 to 1 000 [1/min]: Maximum permissible speed

Maximum permissible measurement errors with tool measurement

0.001 to 0.999 [mm]: First maximum permissible measurement error

Maximum permissible measurement errors with tool measurement

0.001 to 0.999 [mm]: Second maximum permissible measurement error

Probing routine

MultiDirections: Probe from multiple directions
SingleDirection: Probe from a single direction

Parameter settings

ChannelSettings

CH_NC

Active kinematic

Kinematic to be activated

List of machine kinematics

Geometry tolerances

Permissible deviation of circle radius

0.0001 to 0.016 [mm]: Permissible deviation of circle radius at the circle end point compared to circle start point

Configuration of machining cycles

Overlap factor with pocket milling

0.001 to 1.414: Overlap factor for Cycle 4 POCKET MILLING and Cycle 5 CIRCULAR POCKET

Display "Spindle?" error message if no M3/M4 is active

on: Output error message

off: Do not output error message

Display "Enter depth as negative" error message

on: Output error message

off: Do not output error message

Approach behavior on the wall of a slot in cylinder surface

LineNormal: Approach with straight line

CircleTangential: Approach with an arc

M function for spindle orientation

-1: Spindle orientation directly over NC

0: Function inactive

1 to 999: Number of M function for spindle orientation

Define behavior of NC program

Reset machining time at program start

True: Machining time is reset

False: Machining time is not reset

Parameter settings

Geometry filter for filtering out linear elements

Type of stretch filter

- Off: No filter active
- ShortCut: Leave out single points on polygon
- Average: The geometry filter smoothes corners

Maximum distance of filtered to unfiltered contour

0 to 10 [mm]: Filtered points are within this tolerance to the resulting line

Maximum length of the line resulting from filtering

0 to 1000 [mm]: Length over which geometry filtering is effective

Settings for the NC editor

Create backup data

TRUE: Create backup file after editing NC programs
FALSE: Do not create backup file after editing NC programs

Behavior of cursor after deletion of lines

TRUE: Cursor on previous line after deletion (iTNC behavior)
FALSE: Cursor on next line after deletion

Behavior of cursor with first or last line

TRUE: All-round cursors permitted at PGM start/end
FALSE: All-round cursors not permitted at PGM start/end

Line break with multi-line sentences

ALL: Always display lines completely
ACT: Only completely display lines of the active sentence
NO: Only display lines completely when the sentence is edited

Activate help

TRUE: Always display help graphics during input
FALSE: Only display help graphics when the CYCLE HELP soft key is set to ON. The CYCLE HELP OFF/ON soft key is displayed in Program operating mode after pressing the "Screen layout" button

Behavior of soft key row following a cycle input

TRUE: Leave cycle soft key row active after a cycle definition
FALSE: Hide cycle soft key row after a cycle definition

Delete confirmation request with Block

TRUE: Display confirmation request when deleting an NC block
FALSE: Do not display confirmation request when deleting an NC block

Line number up to which testing of the NC program is implemented

Parameter settings

100 to 9999: Program length to which geometry should be tested

DIN/ISO programming: Block number increment

0 to 250: Increment for generating DIN/ISO blocks in the program

Line number up to which identical syntax elements are searched for

500 to 9999: Search for cursored-in elements with up/down arrow buttons

---

Path specifications for end users

List with drives and/or directories

Drives and directories entered here are shown by the TNC in the file manager

FN 16 output path for execution

Path for FN 16 output if no path has been defined in the program

FN 16 output path for BA programming and test run

Path for FN 16 output if no path has been defined in the program

---

Settings for the file manager

Display of dependent files

MANUAL: Dependent files are displayed
AUTOMATIC: Dependent files are not displayed

Universal Time (Greenwich Time)

Time difference to universal time [h]

-12 to 13: Time difference in hours relative to Greenwich Mean Time

---

serial Interface: See "Setting up data interfaces", page 470

16.2 Connector pin layout and connection cables for data interfaces

RS-232-C/V.24 interface for HEIDENHAIN devices

The interface complies with the requirements of EN 50 178 for **low voltage electrical separation**.

When using the 25-pin adapter block:

TNC		**Conn. cable 365725-xx**			**Adapter block 310085-01**		**Conn. cable 274545-xx**		
Male	Assignment	Female	Color	Female	Male	Female	Male	Color	Female
1	Do not assign	1		1	1	1	1	White/ Brown	1
2	RXD	2	Yellow	3	3	3	3	Yellow	2
3	TXD	3	Green	2	2	2	2	Green	3
4	DTR	4	Brown	20	20	20	20	Brown	8
5	Signal GND	5	Red	7	7	7	7	Red	7
6	DSR	6	Blue	6	6	6	6		6
7	RTS	7	Gray	4	4	4	4	Gray	5
8	CTR	8	Pink	5	5	5	5	Pink	4
9	Do not assign	9					8	Violet	20
Hsg.	External shield	Hsg.	External shield	Hsg.	Hsg.	Hsg.	Hsg.	External shield	Hsg.

When using the 9-pin adapter block:

TNC		**Conn. cable 355484-xx**			**Adapter block 363987-02**		**Conn. cable 366964-xx**		
Male	Assignment	Female	Color	Male	Female	Male	Female	Color	Female
1	Do not assign	1	Red	1	1	1	1	Red	1
2	RXD	2	Yellow	2	2	2	2	Yellow	3
3	TXD	3	White	3	3	3	3	White	2
4	DTR	4	Brown	4	4	4	4	Brown	6
5	Signal GND	5	Black	5	5	5	5	Black	5
6	DSR	6	Violet	6	6	6	6	Violet	4
7	RTS	7	Gray	7	7	7	7	Gray	8
8	CTR	8	White/ Green	8	8	8	8	White/ Green	7
9	Do not assign	9	Green	9	9	9	9	Green	9
Hsg.	External shield	Hsg.	External shield	Hsg.	Hsg.	Hsg.	Hsg.	External shield	Hsg.

Non-HEIDENHAIN devices

The connector layout of a non-HEIDENHAIN device may substantially differ from that of a HEIDENHAIN device.

It depends on the unit and the type of data transfer. The table below shows the connector pin layout on the adapter block.

Adapter block 363987-02		**Conn. cable 366964-xx**		
Female	Male	Female	Color	Female
1	1	1	Red	1
2	2	2	Yellow	3
3	3	3	White	2
4	4	4	Brown	6
5	5	5	Black	5
6	6	6	Violet	4
7	7	7	Gray	8
8	8	8	White/ Green	7
9	9	9	Green	9
Hsg.	Hsg.	Hsg.	Ext. shield	Hsg.

Ethernet interface RJ45 socket

Maximum cable length:

- Unshielded: 100 m
- Shielded: 400 m

Pin	**Signal**	**Description**
1	TX+	Transmit Data
2	TX–	Transmit Data
3	REC+	Receive Data
4	Vacant	
5	Vacant	
6	REC–	Receive Data
7	Vacant	
8	Vacant	

16.3 Technical Information

Explanation of symbols

■ Standard

□ Axis option

1 Software option 1

User functions	
Short description	■ Basic version: 3 axes plus closed-loop spindle ■ Fourth NC axis plus auxiliary axis ■ or □ Additional axis for 4 axes plus closed-loop spindle □ Additional axis for 5 axes plus closed-loop spindle
Program entry	In HEIDENHAIN conversational and ISO
Position data	■ Nominal positions for lines and arcs in Cartesian coordinates or polar coordinates ■ Incremental or absolute dimensions ■ Display and entry in mm or inches
Tool compensation	■ Tool radius in the working plane and tool length ■ Radius compensated contour look ahead for up to 99 blocks (M120)
Tool tables	Multiple tool tables with any number of tools
Constant contour speed	■ With respect to the path of the tool center ■ With respect to the cutting edge
Parallel operation	Creating a program with graphical support while another program is being run
Rotary table machining (software option 1)	**1** Programming of cylindrical contours as if in two axes **1** Feed rate in distance per minute
Contour elements	■ Straight line ■ Chamfer ■ Circular path ■ Circle center ■ Circle radius ■ Tangentially connected arc ■ Corner rounding
Approaching and departing the contour	■ Via straight line: tangential or perpendicular ■ Via circular arc
FK free contour programming	■ FK free contour programming in HEIDENHAIN conversational format with graphic support for workpiece drawings not dimensioned for NC
Program jumps	■ Subprograms ■ Program-section repeat ■ Any desired program as subroutine

User functions		
Fixed cycles	■	Cycles for drilling, and conventional and rigid tapping
	■	Roughing of rectangular and circular pockets
	■	Cycles for pecking, reaming, boring, and counterboring
	■	Cycles for milling internal and external threads
	■	Finishing of rectangular and circular pockets
	■	Cycles for clearing level and inclined surfaces
	■	Cycles for milling linear and circular slots
	■	Cartesian and polar point patterns
	■	Contour-parallel contour pocket
	■	Contour train
	■	OEM cycles (special cycles developed by the machine tool builder) can also be integrated
	■	Cycles for turning operations
Coordinate transformation	■	Datum shift, rotation, mirroring
	■	Scaling factor (axis-specific)
	1	Tilting the working plane (software option 1)
Q parameters Programming with Variables	■	Mathematical functions: =, +, –, *, sin α, cos α, root
	■	Logical operations (=, ≠, <, >)
	■	Calculating with parentheses
	■	tan α, arc sin, arc cos, arc tan, a^n, e^n, ln, log, absolute value of a number, constant π, negation, truncation of digits before or after the decimal point
	■	Functions for calculation of circles
	■	String parameters
Programming aids	■	Calculator
	■	Complete list of all current error messages
	■	Context-sensitive help function for error messages
	■	Graphic support for the programming of cycles
	■	Comment blocks in the NC program
Teach-In	■	Actual positions can be transferred directly into the NC program
Test run graphics Display modes	■	Graphic simulation before program run, even while another program is being run
	■	Plan view / projection in 3 planes / 3-D view / 3-D line graphic
	■	Magnification of details
Programming graphics	■	In the Programming mode, the contour of the NC blocks is drawn on screen while they are being entered (2-D pencil-trace graphics), even while another program is running
Program Run graphics Display modes	■	Graphic simulation of real-time machining in plan view / projection in 3 planes / 3-D view
Machining time	■	Calculating the machining time in the Test Run mode of operation
	■	Display of the current machining time in the Program Run operating modes

User functions		
Returning to the contour	■	Mid-program startup in any block in the program, returning the tool to the calculated nominal position to continue machining
	■	Program interruption, contour departure and return
Datum tables	■	Multiple datum tables, for storing workpiece-related datums
Touch probe cycles	■	Calibrate the touch probe
	■	Compensation of workpiece misalignment, manual or automatic
	■	Datum setting, manual or automatic
	■	Automatic workpiece measurement
	■	Cycles for automatic tool measurement
	■	Cycles for automatic tool measurement
	■	Cycles for automatic kinematics measurement

16.3 Technical Information

Specifications		
Components	■	Operating panel
	■	TFT color flat-panel display with soft keys
Program memory	■	2 GB
Input resolution and display step	■	Up to 0.1 µm for linear axes
	■	Up to 0.0001° for rotary axes
Input range	■	Maximum 999 999 999 mm or 999 999 999°
Interpolation	■	Linear in 4 axes
	■	Circular in 2 axes
	■	Helical: superimposition of circular and straight paths
	■	Helical: superimposition of circular and straight paths
Block processing time 3-D straight line without radius compensation	■	6 ms
Axis feedback control	■	Position loop resolution: Signal period of the position encoder/1024
	■	Cycle time of position controller: 3 ms
	■	Cycle time of speed controller: 200 µs
Range of traverse	■	Maximum 100 m (3937 inches)
Spindle speed	■	Maximum 100 000 rpm (analog speed command signal)
Error compensation	■	Linear and nonlinear axis error, backlash, reversal peaks during circular movements, thermal expansion
	■	Stick-slip friction
Data interfaces	■	One each RS-232-C /V.24 max. 115 kilobaud
	■	Expanded interface with LSV-2 protocol for external operation of the TNC over the interface with HEIDENHAIN software TNCremo
	■	Ethernet interface 100 Base T approx. 40 to 80 Mbps (depending on file type and network utilization)
	■	3 x USB 2.0
Ambient temperature	■	Operation: 0 °C to +45 °C
	■	Storage: –30 °C to +70 °C

Accessories	
Electronic handwheels	■ One HR 550 FS portable wireless handwheel with display or ■ One HR 520 portable handwheel with display, or ■ One HR 420 portable handwheel with display or ■ One HR 410 portable handwheel, or ■ One HR 130 panel-mounted handwheel, or ■ Up to three HR 150 panel-mounted handwheels via HRA 110 handwheel adapter
Touch probes	■ TS 220: triggering 3-D touch probe with cable connection, or ■ TS 440: 3-D touch trigger probe with infrared transmission ■ TS 444: Battery-free 3-D touch trigger probe with infrared transmission ■ TS 640: 3-D touch trigger probe with infrared transmission ■ TS 740: High-precision 3-D touch trigger probe with infrared transmission ■ TT 140: 3-D touch trigger probe for tool measurement ■ TT 449: 3-D touch trigger probe for tool measurement with infrared transmission

Hardware, options	
	■ 1st additional axis for 4 axes plus spindle ■ 2nd additional axis for 5 axes plus spindle

Software option 1 (option number 08)	
Rotary table machining	■ Programming of cylindrical contours as if in two axes ■ Feed rate in distance per minute
Coordinate transformation	■ Working plane, tilting the ...
Interpolation	■ Circle in 3 axes with tilted working plane (spacial arc)

HEIDENHAIN DNC (option number 18)	
	■ Communication with external PC applications over COM component

Software option for additional conversational languages (option number 41)	
Additional conversational languages	■ Slovenian ■ Norwegian ■ Slovak ■ Latvian ■ Korean ■ Estonian ■ Turkish ■ Romanian ■ Lithuanian

Input format and unit of TNC functions	
Positions, coordinates, circle radii, chamfer lengths	-99 999.9999 to +99 999.9999 (5, 4: places before the decimal point, places after the decimal point) [mm]
Tool numbers	0 to 32 767.9 (5, 1)
Tool names	16 characters, enclosed by quotation marks with **TOOL CALL**. Permitted special characters: #, $, %, &, -
Delta values for tool compensation	–99.9999 to +99.9999 (2, 4) [mm]
Spindle speeds	0 to 99 999.999 (5, 3) [rpm]
Feed rates	0 to 99 999.999 (5.3) [mm/min] or [mm/tooth] or [mm/rev]
Dwell time in Cycle 9	0 to 3600.000 (4, 3) [s]
Thread pitch in various cycles	–99.9999 to +99.9999 (2, 4) [mm]
Angle of spindle orientation	0 to 360.0000 (3, 4) [°]
Angle for polar coordinates, rotation, tilting the working plane	–360.0000 to 360.0000 (3, 4) [°]
Polar coordinate angle for helical interpolation (CP)	-5 400.0000 to 5 400.0000 (4, 4) [°]
Datum numbers in Cycle 7	0 to 2999 (4, 0)
Scaling factor in Cycles 11 and 26	0.000001 to 99.999999 (2, 6)
Miscellaneous functions M	0 to 999 (4, 0)
Q parameter numbers	0 to 1999 (4, 0)
Q parameter values	–99 999.9999 to +99 999.9999 (9, 6)
Surface-normal vectors N and T with 3-D compensation	–9.99999999 to +9.99999999 (1, 8)
Labels (LBL) for program jumps	0 to 999 (5, 0)
Labels (LBL) for program jumps	Any text string in quotes (“ ”)
Number of program section repeats REP	1 to 65 534 (5, 0)
Error number with Q parameter function FN14	0 to 1199 (4, 0)

16.4 Overview tables

Fixed cycles

Cycle number	Cycle designation	DEF active	CALL active
7	Datum shift	■	
8	Mirror image	■	
9	Dwell time	■	
10	Rotation	■	
11	Scaling factor	■	
12	Program call	■	
13	Spindle orientation	■	
14	Contour definition	■	
19	Tilting the working plane	■	
20	Contour data SL II	■	
21	Pilot drilling SL II		■
22	Rough out SL II		■
23	Floor finishing SL II		■
24	Side finishing SL II		■
25	Contour train		■
26	Axis-specific scaling	■	
27	Cylinder surface		■
28	Cylindrical surface slot		■
29	Cylinder surface ridge		■
32	Tolerance	■	
200	Drilling		■
201	Reaming		■
202	Boring		■
203	Universal drilling		■
204	Back boring		■
205	Universal pecking		■
206	Tapping with a floating tap holder, new		■
207	Rigid tapping, new		■
208	Bore milling		■
209	Tapping with chip breaking		■
220	Polar pattern	■	
221	Cartesian pattern	■	
230	Multipass milling		■
231	Ruled surface		■
232	Face milling		■
240	Centering		■

Cycle number	Cycle designation	DEF active	CALL active
241	Single-lip deep-hole drilling		■
247	Datum setting	■	
251	Rectangular pocket (complete machining)		■
252	Circular pocket (complete machining)		■
253	Slot milling		■
254	Circular slot		■
256	Rectangular stud (complete machining)		■
257	Circular stud (complete machining)		■
262	Thread milling		■
263	Thread milling/countersinking		■
264	Thread drilling/milling		■
265	Helical thread drilling/milling		■
267	Outside thread milling		■

Miscellaneous functions

M	Effect	Effective at block... Start	End	Page
M0	Program STOP/Spindle STOP/Coolant OFF		■	307
M1	Optional program run STOP/Spindle STOP/Coolant OFF		■	462
M2	Program run STOP/Spindle STOP/Coolant OFF/CLEAR status display (depending on machine parameter)/Return jump to block 1		■	307
M3	Spindle ON clockwise	■		307
M4	Spindle ON counterclockwise	■		
M5	Spindle STOP		■	
M6	Tool change/STOP program run (depending on machine parameter)/ Spindle STOP		■	307
M8	Coolant on	■		307
M9	Coolant off		■	
M13	Spindle ON clockwise /coolant ON	■		307
M14	Spindle ON counterclockwise/coolant on	■		
M30	Same function as M2		■	307
M89	Vacant miscellaneous function **or**	■		Cycles
	cycle call, modally effective (depending on MPs)		■	Manual
M91	Within the positioning block: Coordinates are referenced to machine datum	■		308
M92	Within the positioning block: Coordinates are referenced to position defined by machine tool builder, such as tool change position	■		308
M94	Reduce the rotary axis display to a value below 360°	■		372
M97	Machine small contour steps		■	311
M98	Machine open contours completely		■	312
M99	Blockwise cycle call		■	Cycles Manual

M	Effect	Effective at block...	Start	End	Page
M101	Automatic tool change with replacement tool if maximum tool life has expired			■	158
M102	Reset M101			■	
M107	Suppress error message for replacement tools with oversize			■	158
M108	Reset M107			■	
M109	Constant contouring speed at cutting edge (feed rate increase and reduction)		■		315
M110	Constant contouring speed at cutting edge (only feed rate reduction)		■		
M111	Reset M109/M110			■	
M116	Feed rate in mm/min on rotary axes		■		370
M117	Reset M116			■	
M118	Superimpose handwheel positioning during program run		■		318
M120	Pre-calculate the radius-compensated contour (LOOK AHEAD)		■		316
M126	Shorter-path traverse of rotary axes:		■		371
M127	Reset M126			■	
M130	Within the positioning block: Points are referenced to the untilted coordinate system		■		310
M138	Selection of tilted axes		■		373
M140	Retraction from the contour in the tool-axis direction		■		320
M143	Delete basic rotation		■		322
M141	Suppress touch probe monitoring		■		321
M148	Automatically retract tool from the contour at an NC stop		■		323
M149	Reset M148			■	

16.5 Functions of the TNC 320 and the iTNC 530 compared

Comparison: Specifications

Function	TNC 320	iTNC 530
Axes	6 maximum	18 maximum
Input resolution and display step:		
■ Linear axes ■ Rotary axes	■ 0.1µm ■ 0.001°	■ 0.1 µm ■ 0.0001°
Display	15.1-inch TFT color flat-panel display	15.1-inch TFT color flat-panel display, optional: 19-inch TFT
Memory media for NC, PLC programs and system files	CompactFlash memory card	Hard disk
Program memory for NC programs	2 GB	> 21 GB
Block processing time	6 ms	0.5 ms
HeROS operating system	yes	yes
Windows XP operating system	no	Option
Interpolation:		
■ Straight line ■ Circle ■ Helix ■ Spline	■ 5 axes ■ 3 axes ■ yes ■ no	■ 5 axes ■ 3 axes ■ yes ■ Yes with option 9
Hardware	Compact in operating panel	Modular in electrical cabinet

Comparison: Data interfaces

Function	TNC 320	iTNC 530
Gigabit Ethernet 1000BaseT	X	X
RS-232-C/V.24 serial interface	X	X
RS-422/V.11 serial interface	-	X
USB interface	X (USB 2.0)	X (USB 2.0)

Comparison: Accessories

Function	TNC 320	iTNC 530
Electronic handwheels		
■ HR 410	■ X	■ X
■ HR 420	■ X	■ X
■ HR 520/530/550	■ X	■ X
■ HR 130	■ X	■ X
■ HR 150 via HRA 110	■ X	■ X
Touch probes		
■ TS 220	■ X	■ X
■ TS 440	■ X	■ X
■ TS 444	■ X	■ X
■ TS 449 / TT 449	■ X	■ X
■ TS 640	■ X	■ X
■ TS 740	■ X	■ X
■ TT 130 / TT 140	■ X	■ X
Industrial PC **IPC 61xx**	–	X

Comparison: PC software

Function	TNC 320	iTNC 530
Programming station software	Available	Available
TNCremoNT for data transfer with **TNCbackup** for data backup	Available	Available
TNCremoPlus data transfer software with "live" screen	Available	Available
RemoTools SDK 1.2: Function library for developing your own applications for communicating with HEIDENHAIN controls	Limited functionality available	Available
virtualTNC: Control component for virtual machines	Not available	Available
ConfigDesign: Software for configuring the control	Available	Not available
TeleService: Software for remote diagnostics and maintenance	Available	Available

16.5 Functions of the TNC 320 and the iTNC 530 compared

Comparison: Machine-specific functions

Function	TNC 320	iTNC 530
Switching the traverse range	Function not available	Function available
Central drive (1 motor for multiple machine axes)	Function available	Function available
C-axis operation (spindle motor drives rotary axis)	Function available	Function available
Automatic exchange of milling head	Function not available	Function available
Support of angle heads	Function not available	Function available
Balluf tool identification	Function available (with Python)	Function available
Management of multiple tool magazines	Function available	Function available
Expanded tool management via Python	Function available	Function available

Comparison: User functions

Function	TNC 320	iTNC 530
Program entry		
■ HEIDENHAIN conversational	■ X	■ X
■ DIN/ISO	■ X	■ X
■ With smarT.NC	■ –	■ X
■ With ASCII editor	■ X, directly editable	■ X, editable after conversion
Position entry		
■ Nominal positions for lines and arcs in Cartesian coordinates	■ X	■ X
■ Nominal positions for lines and arcs in polar coordinates	■ X	■ X
■ Incremental or absolute dimensions	■ X	■ X
■ Display and entry in mm or inches	■ X	■ X
■ Set the last tool position as pole (empty CC block)	■ X (error message if pole transfer is ambiguous)	■ X
■ Surface normal vectors (**LN**)	■ X	■ X
■ Spline blocks (**SPL**)	■ –	■ X, with option 09

Function	TNC 320	iTNC 530
Tool compensation		
■ In the working plane, and tool length	■ X	■ X
■ Radius compensated contour look ahead for up to 99 blocks	■ X	■ X
■ Three-dimensional tool radius compensation	■ –	■ X, with option 09
Tool table		
■ Central storage of tool data	■ X	■ X
■ Multiple tool tables with any number of tools	■ X	■ X
■ Flexible management of tool types	■ X	■ –
■ Filtered display of selectable tools	■ X	■ –
■ Sorting function	■ X	■ –
■ Column names	■ Sometimes with _	■ Sometimes with -
■ Copy function: Overwriting relevant tool data	■ X	■ X
■ Form view	■ Switchover with split-screen layout key	■ Switchover by soft key
■ Exchange of tool table between TNC 320 and iTNC 530	■ X	■ Not possible
Touch-probe table for managing different 3-D touch probes	X	–
Creating tool-usage file, checking the availability	X	X
Cutting-data tables: Automatic calculation of spindle speed and feed rate from saved technology tables	–	X
Define any tables	■ Freely definable tables (.TAB files) ■ Reading and writing with FN functions ■ Definable via config. data ■ Table names must start with a letter ■ Reading and writing with SQL functions	■ Freely definable tables (.TAB files) ■ Reading and writing with FN functions

16.5 Functions of the TNC 320 and the iTNC 530 compared

Function	TNC 320	iTNC 530
Constant contouring speed: Relative to the path of the tool center or relative to the tool's cutting edge	X	X
Parallel operation: Creating programs while another program is being run	X	X
Programming of counter axes	X	X
Tilting the working plane (Cycle 19, PLANE function)	X, option #08	X, option #08
Machining with rotary tables		
■ Programming of cylindrical contours as if in two axes		
■ Cylinder Surface (Cycle 27)	■ X, option #08	■ X, option #08
■ Cylinder Surface Slot (Cycle 28)	■ X, option #08	■ X, option #08
■ Cylinder Surface Ridge (Cycle 29)	■ X, option #08	■ X, option #08
■ Cylinder Surface External Contour (Cycle 39)	■ –	■ X, option #08
■ Feed rate in mm/min or rev/min	■ X, option #08	■ X, option #08
Traverse in tool-axis direction		
■ Manual operation (3-D ROT menu)	■ X	■ X, FCL2 function
■ During program interruption	■ X	■ X
■ With handwheel superimpositioning	■ X	■ X, option #44
Approaching and departing the contour: Via a straight line or arc	X	X
Entry of feed rates:		
■ **F** (mm/min), rapid traverse **FMAX**	■ X	■ X
■ **FU** (feed per revolution mm/rev)	■ X	■ X
■ **FZ** (tooth feed rate)	■ X	■ X
■ **FT** (time in seconds for path)	■ –	■ X
■ **FMAXT** (only for active rapid traverse pot: time in seconds for path)	■ –	■ X
FK free contour programming		
■ Programming for workpiece drawings not dimensioned for NC programming	■ X	■ X
■ Conversion of FK program to conversational dialog	■ –	■ X
Program jumps:		
■ Maximum number of label numbers	■ 9999	■ 1000
■ Subprograms	■ X	■ X
■ Nesting depth for subprograms	■ 20	■ 6
■ Program section repeats	■ X	■ X
■ Any desired program as subroutine	■ X	■ X

Function	TNC 320	iTNC 530
Q parameter programming:		
■ Standard mathematical functions	■ X	■ X
■ Formula entry	■ X	■ X
■ String processing	■ X	■ X
■ Local Q parameters **QL**	■ X	■ X
■ Nonvolatile Q parameters **QR**	■ X	■ X
■ Changing parameters during program interruption	■ X	■ X
■ FN15:PRINT	■ –	■ X
■ FN25:PRESET	■ –	■ X
■ FN26:TABOPEN	■ X	■ X
■ FN27:TABWRITE	■ X	■ X
■ FN28:TABREAD	■ X	■ X
■ FN29: PLC LIST	■ X	■ –
■ FN31: RANGE SELECT	■ –	■ X
■ FN32: PLC PRESET	■ –	■ X
■ FN37:EXPORT	■ X	■ –
■ FN38: SEND	■ –	■ X
■ Saving file externally with **FN16**	■ –	■ X
■ **FN16** formatting: Left-aligned, right-aligned, string lengths	■ –	■ X
■ Writing to LOG file with **FN16**	■ X	■ –
■ Displaying parameter contents in the additional status display	■ X	■ –
■ Displaying parameter contents during programming (Q-INFO)	■ X	■ X
■ **SQL** functions for writing and reading tables	■ X	■ –

16.5 Functions of the TNC 320 and the iTNC 530 compared

Function	TNC 320	iTNC 530
Graphic support		
■ 2-D programming graphics	■ X	■ X
■ REDRAW function	■ –	■ X
■ Show grid lines as the background	■ X	■ –
■ 3-D line graphics	■ –	■ X
■ Test graphics (plan view, projection in 3 planes, 3-D view)	■ X	■ X
■ High-resolution view	■ –	■ X
■ Tool display	■ X	■ X
■ Set the simulation speed	■ X	■ X
■ Coordinates of line intersection for projection in 3 planes	■ –	■ X
■ Expanded zoom functions (mouse operation)	■ X	■ X
■ Displaying frame for workpiece blank	■ X	■ X
■ Displaying the depth value in plan view during mouse-over	■ –	■ X
■ Targeted stop of test run (STOP AT N)	■ –	■ X
■ Consideration of tool change macro	■ –	■ X
■ Program run graphics (plan view, projection in 3 planes, 3-D view)	■ X	■ X
■ High-resolution view	■ –	■ X

Function	TNC 320	iTNC 530
Datum tables: for storing workpiece-related datums	X	X
Preset table: for saving reference points (presets)	X	X
Pallet management		
■ Support of pallet files	■ –	■ X
■ Tool-oriented machining	■ –	■ X
■ Pallet preset table: for managing pallet datums	■ –	■ X
Returning to the contour		
■ With mid-program startup	■ X	■ X
■ After program interruption	■ X	■ X
Autostart function	X	X
Actual position capture: Actual positions can be transferred to the NC program	X	X
Enhanced file management		
■ Creating multiple directories and subdirectories	■ X	■ X
■ Sorting function	■ X	■ X
■ Mouse operation	■ X	■ X
■ Selection of target directory by soft key	■ X	■ X
Programming aids:		
■ Help graphics for cycle programming	■ X, can be switched off via config datum	■ X
■ Animated help graphics when **PLANE/PATTERN DEF** function is selected	■ –	■ X
■ Help graphics for **PLANE/PATTERN DEF**	■ X	■ X
■ Context-sensitive help function for error messages	■ X	■ X
■ **TNCguide**: Browser-based help system	■ X	■ X
■ Context-sensitive call of help system	■ X	■ X
■ Calculator	■ X (scientific)	■ X (standard)
■ Comment blocks in NC program	■ X	■ X
■ Structure blocks in NC program	■ X	■ X
■ Structure view in test run	■ –	■ X
Dynamic Collision Monitoring (DCM):		
■ Collision monitoring in Automatic operation	■ –	■ X, option #40
■ Collision monitoring in Manual operation	■ –	■ X, option #40
■ Graphic depiction of the defined collision objects	■ –	■ X, option #40
■ Collision checking in the Test Run mode	■ –	■ X, option #40
■ Fixture monitoring	■ –	■ X, option #40
■ Tool carrier management	■ –	■ X, option #40

16.5 Functions of the TNC 320 and the iTNC 530 compared

Function	TNC 320	iTNC 530
CAM support:		
■ Loading of contours from DXF data	■ –	■ X, option #42
■ Loading of machining positions from DXF data	■ –	■ X, option #42
■ Offline filter for CAM files	■ –	■ X
■ Stretch filter	■ X	■ –
MOD functions:		
■ User parameters	■ Config data	■ Numerical structure
■ OEM help files with service functions	■ –	■ X
■ Data medium inspection	■ –	■ X
■ Load service packs	■ –	■ X
■ Setting the system time	■ X	■ X
■ Select the axes for actual position capture	■ –	■ X
■ Definition of traverse range limits	■ –	■ X
■ Restricting external access	■ X	■ X
■ Switching the kinematics	■ X	■ X
Calling fixed cycles:		
■ With **M99** or **M89**	■ X	■ X
■ With **CYCL CALL**	■ X	■ X
■ With **CYCL CALL PAT**	■ X	■ X
■ With **CYC CALL POS**	■ X	■ X
Special functions:		
■ Creating backward programs	■ –	■ X
■ Datum shift with **TRANS DATUM**	■ X	■ X
■ Adaptive Feed Control AFC	■ –	■ X, option #45
■ Global definition of cycle parameters: **GLOBAL DEF**	■ X	■ X
■ Pattern definition with **PATTERN DEF**	■ X	■ X
■ Definition and execution of point tables	■ X	■ X
■ Simple contour formula **CONTOUR DEF**	■ X	■ X
Functions for large molds and dies:		
■ Global program settings (GS)	■ –	■ X, option #44
■ Expanded **M128**: **FUNCTION TCPM**	■ –	■ X
Status displays:		
■ Positions, spindle speed, feed rate	■ X	■ X
■ Larger depiction of position display, Manual Operation	■ X	■ X
■ Additional status display, form view	■ X	■ X
■ Display of handwheel traverse when machining with handwheel superimposition	■ X	■ X
■ Display of distance-to-go in a tilted system	■ –	■ X
■ Dynamic display of Q-parameter contents, definable number ranges	■ X	■ –
■ OEM-specific additional status display via Python	■ X	■ X
■ Graphic display of residual run time	■ –	■ X
Individual color settings of user interface	–	X

Comparison: Cycles

Cycle	TNC 320	iTNC 530
1, pecking	X	X
2, tapping	X	X
3, slot milling	X	X
4, pocket milling	X	X
5, circular pocket	X	X
6, rough out (SL I, recommended: SL II, Cycle 22)	–	X
7, datum shift	X	X
8, mirror image	X	X
9, dwell time	X	X
10, rotation	X	X
11, scaling	X	X
12, program call	X	X
13, oriented spindle stop	X	X
14, contour definition	X	X
15, pilot drilling (SL I, recommended: SL II, Cycle 21)	–	X
16, contour milling (SL I, recommended: SL II, Cycle 24)	–	X
17, tapping (controlled spindle)	X	X
18, thread cutting	X	X
19, working plane	X, option #08	X, option #08
20, contour data	X	X
21, pilot drilling	X	X
22, rough-out:	X	X
■ Parameter Q401, feed rate factor	■ –	■ X
■ Parameter Q404, fine roughing strategy	■ –	■ X
23, floor finishing	X	X
24, side finishing	X	X
25, contour train	X	X
26, axis-specific scaling factor	X	X
27, contour surface	X, option #08	X, option #08
28, cylinder surface	X, option #08	X, option #08
29, cylinder surface ridge	X, option #08	X, option #08
30, run 3-D data	–	X
32, tolerance with HSC mode and TA	X	X
39, cylinder surface external contour	–	X, option #08
200, drilling	X	X
201, reaming	X	X
202, boring	X	X
203, universal drilling	X	X
204, back boring	X	X

16.5 Functions of the TNC 320 and the iTNC 530 compared

Cycle	TNC 320	iTNC 530
205, universal pecking	X	X
206, tapping with floating tap holder	X	X
207, rigid tapping, new	X	X
208, bore milling	X	X
209, tapping with chip breaking	X	X
210, slot with reciprocating plunge	X	X
211, circular slot	X	X
212, rectangular pocket finishing	X	X
213, rectangular stud finishing	X	X
214, circular pocket finishing	X	X
215, circular stud finishing	X	X
220, circular pattern	X	X
221, linear pattern	X	X
225, engraving	X	X
230, multipass milling	X	X
231, ruled surface	X	X
232, face milling	X	X
240, centering	X	X
241, single-lip deep-hole drilling	X	X
247, datum setting	X	X
251, rectangular pocket (complete)	X	X
252, circular pocket (complete)	X	X
253, slot (complete)	X	X
254, circular slot (complete)	X	X
256, rectangular stud (complete)	X	X
257, circular stud (complete)	X	X
262, thread milling	X	X
263, thread milling/countersinking	X	X
264, thread drilling/milling	X	X
265, helical thread drilling/milling	X	X
267, outside thread milling	X	X
270, contour train data for defining the behavior of Cycle 25	–	X
275, trochoidal milling	–	X
276, 3-D contour train	–	X
290, interpolation turning	–	X, option #96

Comparison: Miscellaneous functions

M	Effect	TNC 320	iTNC 530
M00	Program STOP/Spindle STOP/Coolant OFF	X	X
M01	Optional program STOP	X	X
M02	Program run STOP/Spindle STOP/Coolant OFF/CLEAR status display (depending on machine parameter)/Return jump to block 1	X	X
M03 M04 M05	Spindle ON clockwise Spindle ON counterclockwise Spindle STOP	X	X
M06	Tool change/Stop program run (machine-dependent function)/ Spindle STOP	X	X
M08 M09	Coolant on Coolant off	X	X
M13 M14	Spindle ON clockwise /coolant ON Spindle ON counterclockwise/coolant on	X	X
M30	Same function as M02	X	X
M89	Vacant miscellaneous function **or** cycle call, modally effective (machine-dependent function)	X	X
M90	Constant contouring speed at corners (not required at TNC 320)	–	X
M91	Within the positioning block: Coordinates are referenced to machine datum	X	X
M92	Within the positioning block: Coordinates are referenced to position defined by machine tool builder, such as tool change position	X	X
M94	Reduce the rotary axis display to a value below 360°	X	X
M97	Machine small contour steps	X	X
M98	Machine open contours completely	X	X
M99	Blockwise cycle call	X	X
M101 M102	Automatic tool change with replacement tool if maximum tool life has expired Reset M101	X	X
M103	Reduce feed rate during plunging to factor F (percentage)	X	X
M104	Reactivate most recently set datum	–	X
M105 M106	Machining with second k_v factor Machining with first k_v factor	–	X
M107 M108	Suppress error message for replacement tools with oversize Reset M107	X	X
M109 M110 M111	Constant contouring speed at cutting edge (feed rate increase and reduction) Constant contouring speed at cutting edge (only feed rate reduction) Reset M109/M110	X	X
M112 M113	Enter contour transition between two contour elements Reset M112	– (recommended: Cycle 32)	X

16.5 Functions of the TNC 320 and the iTNC 530 compared

M	Effect	TNC 320	iTNC 530
M114 M115	Automatic compensation of machine geometry when working with tilted axes Reset M114	–	X, option #08
M116 M117	Feed rate on rotary tables in mm/min Reset M116	X, option #08	X, option #08
M118	Superimpose handwheel positioning during program run	X	X
M120	Pre-calculate the radius-compensated contour (LOOK AHEAD)	X	X
M124	Contour filter	– (possible via user parameters)	X
M126 M127	Shorter-path traverse of rotary axes: Reset M126	X	X
M128 M129	Maintaining the position of the tool tip when positioning with tilted axes (TCPM) Reset M128	–	X, option #09
M130	Within the positioning block: Points are referenced to the untilted coordinate system	X	X
M134 M135	Exact stop at nontangential contour transitions when positioning with rotary axes Reset M134	–	X
M136 M137	Feed rate F in millimeters per spindle revolution Reset M136	X	X
M138	Selection of tilted axes	X	X
M140	Retraction from the contour in the tool-axis direction	X	X
M141	Suppress touch probe monitoring	X	X
M142	Delete modal program information	–	X
M143	Delete basic rotation	X	X
M148 M149	Automatically retract tool from the contour at an NC stop Reset M148	X	X
M150	Suppress limit switch message	– (possible via FN 17)	X
M197	Rounding the corners	X	–
M200 -M204	Laser cutting functions	–	X

Comparison: Touch probe cycles in the Manual Operation and El. Handwheel modes

Cycle	TNC 320	iTNC 530
Touch-probe table for managing 3-D touch probes	X	–
Calibrating the effective length	X	X
Calibrating the effective radius	X	X
Measuring a basic rotation using a line	X	X
Set the datum in any axis	X	X
Setting a corner as datum	X	X
Setting a circle center as datum	X	X
Setting a center line as datum	X	X
Measuring a basic rotation using two holes/cylindrical studs	X	X
Setting the datum using four holes/cylindrical studs	X	X
Setting the circle center using three holes/cylindrical studs	X	X
Support of mechanical touch probes by manually capturing the current position	By soft key	By hard key
Writing measured values in preset table	X	X
Writing measured values in datum tables	X	X

Comparison: Touch probe cycles for automatic workpiece inspection

Cycle	TNC 320	iTNC 530
0, reference plane	X	X
1, polar datum	X	X
2, calibrating TS	–	X
3, measuring	X	X
4, measuring in 3-D	–	X
9, calibrating TS length	–	X
30, calibrating TT	X	X
31, measuring tool length	X	X
32, measuring tool radius	X	X
33, measuring tool length and radius	X	X
400, basic rotation	X	X
401, basic rotation from two holes	X	X
402, basic rotation from two studs	X	X
403, compensating a basic rotation via a rotary axis	X	X
404, setting a basic rotation	X	X
405, compensating workpiece misalignment by rotating the C axis	X	X
408, slot center datum	X	X
409, ridge center datum	X	X
410, datum from inside of rectangle	X	X

16.5 Functions of the TNC 320 and the iTNC 530 compared

Cycle	TNC 320	iTNC 530
411, datum from outside of rectangle	X	X
412, datum from inside of circle	X	X
413, datum from outside of circle	X	X
414, datum at outside corner	X	X
415, datum at inside corner	X	X
416, datum at circle center	X	X
417, datum in touch probe axis	X	X
418, datum at center of 4 holes	X	X
419, datum in one axis	X	X
420, measuring an angle	X	X
421, measuring a hole	X	X
422, measuring a circle from outside	X	X
423, measuring a rectangle from inside	X	X
424, measuring a rectangle from outside	X	X
425, measuring inside width	X	X
426, measuring a ridge from outside	X	X
427, boring	X	X
430, measuring a bolt hole circle	X	X
431, measuring a plane	X	X
440, measuring an axis shift	–	X
441, Rapid probing (on TNC 320 partly possible with touch probe table)	–	X
450, saving the kinematics	–	X, option 48
451, measuring the kinematics	–	X, option 48
452, preset compensation	–	X, option 48
460, calibrating a TS on a sphere	X	X
461, calibrate TS length	X	X
462, calibration in a ring	X	X
463, calibration on stud	X	X
480, calibrating a TT	X	X
481, measuring/inspecting the tool length	X	X
482, measuring/inspecting the tool radius	X	X
483, measuring/inspecting the tool length and radius	X	X
484, calibrating the infrared TT	X	X

Comparison: Differences in programming

Function	TNC 320	iTNC 530
Switching the operating mode while a block is being edited	Not permitted	Permitted
File handling:		
■ **Save file** function	■ Available	■ Available
■ **Save file as** function	■ Available	■ Available
■ Discard changes	■ Available	■ Available
File management:		
■ Mouse operation	■ Available	■ Available
■ Sorting function	■ Available	■ Available
■ Entry of name	■ Opens the **Select file** pop-up window	■ Synchronizes the cursor
■ Support of shortcuts	■ Not available	■ Available
■ Favorites management	■ Not available	■ Available
■ Configuration of column structure	■ Not available	■ Available
■ Soft-key arrangement	■ Slightly different	■ Slightly different
Skip block function	Available	Available
Selecting a tool from the table	Selection via split-screen menu	Selection in a pop-up window
Programming special functions with the SPEC FCT key	Pressing the key opens a soft-key row as a submenu. To exit the submenu, press the SPEC FCT key again; then the TNC shows the last active soft-key row	Pressing the key adds the soft-key row as the last row. To exit the menu, press the SPEC FCT key again; then the TNC shows the last active soft-key row
Pressing the END hard key while the **CYCLE DEF** and **TOUCH PROBE** menus are active	Terminates the editing process and calls the file manager	Exits the respective menu
Calling the file manager while the **CYCLE DEF** and **TOUCH PROBE** menus are active	Terminates the editing process and calls the file manager. The respective soft-key row remains selected when the file manager is exited	Error message **Key non-functional**
Calling the file manager while **CYCL CALL**, **SPEC FCT**, **PGM CALL** and **APPR/DEP** menus are active	Terminates the editing process and calls the file manager. The respective soft-key row remains selected when the file manager is exited	Terminates the editing process and calls the file manager. The basic soft-key row is selected when the file manager is exited

16.5 Functions of the TNC 320 and the iTNC 530 compared

Function	TNC 320	iTNC 530
Datum table:		
■ Sorting function by values within an axis	■ Available	■ Not available
■ Resetting the table	■ Available	■ Not available
■ Hiding axes that are not present	■ Available	■ Available
■ Switching the list/form view	■ Switchover via split-screen key	■ Switchover by toggle soft key
■ Inserting individual line	■ Allowed everywhere, renumbering possible after request. Empty line is inserted, must be filled with zeros manually	■ Only allowed at end of table. Line with value 0 in all columns is inserted
■ Transfer of actual position values in individual axis to the datum table per keystroke	■ Not available	■ Available
■ Transfer of actual position values in all active axes to the datum table per keystroke	■ Not available	■ Available
■ Using a key to capture the last positions measured by TS	■ Not available	■ Available
FK free contour programming:		
■ Programming of parallel axes	■ With X/Y coordinates, independent of machine type; switchover with **FUNCTION PARAXMODE**	■ Machine-dependent with the existing parallel axes
■ Automatic correction of relative references	■ Relative references in contour subprograms are not corrected automatically	■ All relative references are corrected automatically
Handling of error messages:		
■ Help with error messages	■ Call via ERR key	■ Call via HELP key
■ Switching the operating mode while help menu is active	■ Help menu is closed when the operating mode is switched	■ Operating mode switchover is not allowed (key is non-functional)
■ Selecting the background operating mode while help menu is active	■ Help menu is closed when F12 is used for switching	■ Help menu remains open when F12 is used for switching
■ Identical error messages	■ Are collected in a list	■ Are displayed only once
■ Acknowledgment of error messages	■ Every error message (even if it is displayed more than once) must be acknowledged, the **Delete all** function is available	■ Error message to be acknowledged only once
■ Access to protocol functions	■ Log and powerful filter functions (errors, keystrokes) are available	■ Complete log without filter functions available
■ Saving service files	■ Available. No service file is created when the system crashes	■ Available. A service file is automatically created when the system crashes

Function	TNC 320	iTNC 530
Find function:		
■ List of words recently searched for	■ Not available	■ Available
■ Show elements of active block	■ Not available	■ Available
■ Show list of all available NC blocks	■ Not available	■ Available
Starting the find function with the up/down arrow keys when highlight is on a block	Works with max. 9999 blocks, can be set via config datum	No limitation regarding program length
Programming graphics:		
■ True-to-scale display of grid	■ Available	■ Not available
■ Editing contour subprograms in SLII cycles with AUTO DRAW ON	■ If error messages occur, the cursor is on the **CYCL CALL** block in the main program	■ If error messages occur, the cursor is on the error-causing block in the contour subprogram
■ Moving the zoom window	■ Repeat function not available	■ Repeat function available
Programming minor axes:		
■ Syntax **FUNCTION PARAXCOMP**: Define the behavior of the display and the paths of traverse	■ Available	■ Not available
■ Syntax **FUNCTION PARAXMODE**: Define the assignment of the parallel axes to be traversed	■ Available	■ Not available
Programming OEM cycles		
■ Access to table data	■ Via **SQL** commands and via **FN17/FN18** or **TABREAD-TABWRITE** functions	■ Via **FN17/FN18** or **TABREAD-TABWRITE** functions
■ Access to machine parameters	■ With the **CFGREAD** function	■ Via **FN18** functions
■ Creating interactive cycles with **CYCLE QUERY**, e.g. touch-probe cycles in Manual Operation mode	■ Available	■ Not available

Comparison: Differences in Test Run, functionality

Function	TNC 320	iTNC 530
Test Run up to block N	Function not available	Function available
Calculation of machining time	Each time the simulation is repeated by pressing the START soft key, the machining time is totaled	Each time the simulation is repeated by pressing the START soft key, time calculation starts at 0

Comparison: Differences in Test Run, operation

Function	TNC 320	iTNC 530
Arrangement of soft-key rows and soft keys within the rows	Arrangement of soft-key rows and soft-keys varies depending on the active screen layout.	
Zoom function	Each sectional plane can be selected by individual soft keys	Sectional plane can be selected via three toggle soft keys
Machine-specific miscellaneous functions M	Lead to error messages if they are not integrated in the PLC	Are ignored during Test Run
Displaying/editing the tool table	Function available via soft key	Function not available

Comparison: Differences in Manual Operation, functionality

Function	TNC 320	iTNC 530
Manual probing cycles in the tilted working plane (3DROT: Active)	Manual probing cycles in the tilted working plane can only be used if 3D-ROT for **Manual** and **Automatic** operating modes is set to “Active”.	Manual probing cycles in the tilted working plane can only be used if 3D-ROT for **Manual** operating mode is set to “Active”.
Jog increment function	The jog increment can be defined separately for linear and rotary axes	The jog increment applies for both linear and rotary axes

Function	TNC 320	iTNC 530
Preset table	Basic transformation (translation and rotation) of machine table system to workpiece system via the columns **X**, **Y** and **Z**, as well as spatial angles **SPA**, **SPB** and **SPC**. In addition, the columns **X_OFFS** to **W_OFFS** can be used to define the axis offset of each individual axis. The function of the axis offsets can be configured.	Basic transformation (translation) of machine table system to workpiece system via the columns **X**, **Y** and **Z**, as well as a **ROT** basic rotation in the working plane (rotation). In addition, the columns **A** to **W** can be used to define datums in the rotary and parallel axes.
Behavior during presetting	Presetting in a rotary axis has the same effect as an axis offset. The offset is also effective for kinematics calculations and for tilting the working plane. The machine parameter **CfgAxisPropKinn->presetToAlignAxis** is used to define whether the axis offset is to be taken into account internally after zero setting. Independently of this, an axis offset has always the following effects: ■ An axis offset always influences the nominal position display of the affected axis (the axis offset is subtracted from the current axis value). ■ If a rotary axis coordinate is programmed in an L block, then the axis offset is added to the programmed coordinate.	Rotary axis offsets defined by machine parameters do not influence the axis positions that were defined in the Tilt working plane function. MP7500 bit 3 defines whether the current rotary axis position referenced to the machine datum is taken into account, or whether a position of 0° is assumed for the first rotary axis (usually the C axis).
Handling of preset table:		
■ Editing the preset table in the Programming mode of operation	■ Possible	■ Not possible
■ Preset tables that depend on the range of traverse	■ Not available	■ Available
Definition of feed-rate limitation	Feed-rate limitation can be defined separately for linear and rotary axes	Only one feed-rate limitation can be defined for linear and rotary axes

Comparison: Differences in Manual Operation, operation

Function	TNC 320	iTNC 530
Capturing the position values from mechanical probes	Actual-position capture by soft key	Actual-position capture by hard key
Exiting the touch probe functions menu	Only via the END soft key	Via the END soft key or the END hard key
Exit the preset table	Only through the BACK/END soft keys	Through the END hard key at any time
Multiple editing of tool table TOOL.T, or pocket table tool_p.tch	Soft-key row that was last active before exiting is active	Permanently defined soft-key row (soft-key row 1) is displayed

Comparison: Differences in Program Run, operation

Function	TNC 320	iTNC 530
Arrangement of soft-key rows and soft keys within the rows	Arrangement of soft-key rows and soft-keys varies depending on the active screen layout.	
Operating-mode switchover after program run was interrupted by switching to the Single Block mode of operation, and canceled by **INTERNAL STOP**	When you return to the Program Run mode of operation: Error message **Selected block not addressed**. Use mid-program startup to select the point of interruption	Switching the operating mode is allowed, modal information is saved, program run can be continued by pressing NC start
GOTO is used to go to FK sequences after program run was interrupted there before switching the operating mode	Error message **FK programming: Undefined starting position**	GOTO allowed
Mid-program startup:		
■ Behavior after restoring the machine status	■ The menu for returning must be selected with the RESTORE POSITION soft key	■ Menu for returning is selected automatically
■ Completing positioning for mid-program startup	■ After position has been reached, positioning mode must be exited with the RESTORE POSITION soft key	■ The positioning mode is automatically exited after the position has been reached
■ Switching the screen layout for mid-program startup	■ Only possible, if startup position has already been approached	■ Possible in all operating states
Error messages	Error messages are still active after the error has been corrected and must be acknowledged separately	Error messages are sometimes acknowledged automatically after the error has been corrected

Comparison: Differences in Program Run, traverse movements

Caution: Check the traverse movements!

NC programs that were created on earlier TNC controls may lead to different traverse movements or error messages on a TNC 320!

Be sure to take the necessary care and caution when running-in programs!

Please find a list of known differences below. The list does not pretend to be complete!

Function	TNC 320	iTNC 530
Handwheel-superimposed traverse with M118	Effective in the active coordinate system (which may also be rotated or tilted), or in the machine-based coordinate system, depending on the setting in the 3-D ROT menu for manual operation	Effective in the machine-based coordinate system
Approach/Departure with **APPR/DEP**, **R0** is active, contour element plane is not equal to working plane	If possible, the blocks are executed in the defined **contour element plane**, error message for **APPRLN**, **DEPLN**, **APPRCT**, **DEPCT**	If possible, the blocks are executed in the defined **working plane**; error message for **APPRLN**, **APPRLT**, **APPRCT**, **APPRLCT**
Scaling approach/departure movements (**APPR/DEP/RND**)	Axis-specific scaling factor is allowed, radius is not scaled	Error message
Approach/departure with **APPR/DEP**	Error message if **R0** is programmed for **APPR/DEP LN** or **APPR/DEP CT**	Tool radius 0 and compensation direction **RR** are assumed
Approach/departure with **APPR/DEP** if contour elements with length 0 are defined	Contour elements with length 0 are ignored. The approach/departure movements are calculated for the first or last valid contour element	An error message is issued if a contour element with length 0 is programmed after the **APPR** block (relative to the first contour point programmed in the APPR block) For a contour element with length 0 before a **DEP** block, the TNC does not issue an error message, but uses the last valid contour element to calculate the departure movement

16.5 Functions of the TNC 320 and the iTNC 530 compared

Function	TNC 320	iTNC 530
Effect of Q parameters	**Q60** to **Q99** (or **QS60** to **QS99**) are always local	**Q60** to **Q99** (or **QS60** to **QS99**) are local or global, depending on MP7251 in converted cycle programs (.cyc). Nested calls may cause problems
Automatic cancelation of tool radius compensation	■ Block with **R0** ■ **DEP** block ■ **END PGM**	■ Block with **R0** ■ **DEP** block ■ **PGM CALL** ■ Programming of Cycle 10 **ROTATION** ■ Program selection
NC blocks with **M91**	No consideration of tool radius compensation	Consideration of tool radius compensation
Tool shape compensation	Tool shape compensation is not supported, because this type of programming is considered to be axis-value programming, and the basic assumption is that axes do not form a Cartesian coordinate system	Tool shape compensation is supported
Mid-program startup in a point table	The tool is positioned above the next position to be machined	The tool is positioned above the last position that has been completely machined
Empty **CC** block (pole of last tool position is used) in NC program	Last positioning block in the working plane must contain both coordinates of the working plane	Last positioning block in the working plane does not necessarily need to contain both coordinates of the working plane. Can cause problems with **RND** or **CHF** blocks
Axis-specific scaling of **RND** block	**RND** block is scaled, the result is an ellipse	Error message is issued
Reaction if a contour element with length 0 is defined before or after a **RND** or **CHF** block	Error message is issued	Error message is issued if a contour element with length 0 is located before the **RND** or **CHF** block Contour element with length 0 is ignored if the contour element with length 0 is located after the **RND** or **CHF** block

Function	TNC 320	iTNC 530
Circle programming with polar coordinates	The incremental rotation angle **IPA** and the direction of rotation **DR** must have the same sign. Otherwise, an error message will be issued	The algebraic sign of the direction of rotation is used if the sign defined for **DR** differs from the one defined for **IPA**
Tool radius compensation on circular arc or helix with angular length = 0	The transition between the adjacent elements of the arc/helix is generated. Also, the tool axis motion is executed right before this transition. If the element is the first or last element to be corrected, the next or previous element is dealt with in the same way as the first or last element to be corrected	The equidistant line of the arc/ helix is used for generating the tool path
Compensation of tool length in the position display	The values **L** and **DL** from the tool table and the value **DL** from the **TOOL CALL** are taken into account in the position display	The values **L** and **DL** from the tool table are taken into account in the position display
Traverse movement in spacial arc	Error message is issued	No restrictions
SLII Cycles 20 to 24:		
■ Number of definable contour elements	■ Max. 16384 blocks in up to 12 subcontours	■ Max. 8192 contour elements in up to 12 subcontours, no restrictions for subcontour
■ Define the working plane	■ Tool axis in **TOOL CALL** block defines the working plane	■ The axes of the first positioning block in the first subcontour define the working plane
■ Position at end of SL cycle	■ End position = clearance height above the last position that is defined before the cycle call	■ With MP7420, you can define whether the end position is above the last programmed position, or whether the tool moves only to clearance height

16.5 Functions of the TNC 320 and the iTNC 530 compared

Function	TNC 320	iTNC 530
SLII Cycles 20 to 24:		
■ Handling of islands which are not contained in pockets	■ Cannot be defined with complex contour formula	■ Restricted definition in complex contour formula is possible
■ Set operations for SL cycles with complex contour formulas	■ Real set operation possible	■ Only restricted performance of real set operation possible
■ Radius compensation is active during **CYCL CALL**	■ Error message is issued	■ Radius compensation is canceled, program is executed
■ Paraxial positioning blocks in contour subprogram	■ Error message is issued	■ Program is executed
■ Miscellaneous functions **M** in contour subprogram	■ Error message is issued	■ M functions are ignored
■ **M110** (feed-rate reduction for inside corner)	■ Function does not work within SL cycles	■ Function also works within SL cycles
SLII Contour Train Cycle 25: **APPR/DEP** blocks in contour definition	Not allowed, machining of closed contours is more coherent	**APPR/DEP** blocks are allowed as contour elements
General **cylinder surface machining**:		
■ Contour definition	■ With X/Y coordinates, independent of machine type	■ Machine-dependent, with existing rotary axes
■ Offset definition on cylinder surface	■ With datum shift in X/Y, independent of machine type	■ Machine-dependent datum shift in rotary axes
■ Offset definition for basic rotation	■ Function available	■ Function not available
■ Circle programming with C/CC	■ Function available	■ Function not available
■ **APPR/DEP** blocks in contour definition	■ Function not available	■ Function available
Cylinder surface machining with Cycle 28:		
■ Complete roughing-out of slot	■ Function available	■ Function not available
■ Definable tolerance	■ Function available	■ Function available
Cylinder surface machining with Cycle 29	Direct plunging to contour of ridge	Circular approach to contour of ridge
Cycles 25x for pockets, studs and slots:		
■ Plunging movements	In limit ranges (geometrical conditions of tool/contour) error messages are triggered if plunging movements lead to unreasonable/critical behavior	In limit ranges (geometrical conditions of tool/contour), vertical plunging is used if required

Function	TNC 320	iTNC 530
PLANE function:		
■ **TABLE ROT/COORD ROT** not defined	■ Configured setting is used	■ **COORD ROT** is used
■ Machine is configured for axis angle	■ All **PLANE** functions can be used	■ Only **PLANE AXIAL** is executed
■ Programming an incremental spatial angle according to **PLANE AXIAL**	■ Error message is issued	■ Incremental spatial angle is interpreted as an absolute value
■ Programming an incremental axis angle according to **PLANE SPATIAL** if the machine is configured for spatial angle	■ Error message is issued	■ Incremental axis angle is interpreted as an absolute value
Special functions for cycle programming:		
■ FN17	■ Function available, details are different	■ Function available, details are different
■ FN18	■ Function available, details are different	■ Function available, details are different
Compensation of tool length in the position display	The **DL** value from the **TOOL CALL** and the tool length entries **L** and **DL** from the tool table are taken into account in the position display	The tool length entries **L** and **DL** from the tool table are taken into account in the position display

Comparison: Differences in MDI operation

Function	TNC 320	iTNC 530
Execution of connected sequences	Function partially available	Function available
Saving modally effective functions	Function partially available	Function available

Comparison: Differences in programming station

Function	TNC 320	iTNC 530
Demo version	Programs with more than 100 NC blocks cannot be selected, an error message is issued	Programs can be selected, max. 100 NC blocks are displayed, further blocks are truncated in the display
Demo version	If nesting with PGM CALL results in more than 100 NC blocks, there is no test graphic display; an error message is not issued	Nested programs can be simulated.
Copying NC programs	Copying to and from the directory **TNC:** is possible with Windows Explorer	TNCremo or file manager of programming station must be used for copying
Shifting the horizontal soft-key row	Clicking the soft-key bar shifts the soft-key row to the right, or to the left	Clicking any soft-key bar activates the respective soft-key row

Index

3

3-D touch probes
  Calibration..... 406
3-D view..... 442

A

Accessing tables..... 269
Accessories..... 76
Actual position capture..... 89
Adding comments..... 117
Additional axes..... 81, 81
Adjusting spindle speed..... 391
Angle functions..... 242
Approach contour..... 174
ASCII Files..... 337
Automatic program start..... 460
Automatic tool measurement... 147

B

Basic rotation..... 412
  Measuring in Manual Operation mode..... 412
Block..... 91
  Delete..... 91

C

Calculating with parentheses... 279
Calculation of circles..... 243
Calculator..... 120
Chamfer..... 184
Circle..... 188, 190, 196
Circle center..... 186
Circular path..... 187, 196
Code numbers..... 468
Comparison..... 510
Compensating workpiece misalignment
  By measuring two points on a straight surface..... 411
Connecting/removing USB devices. 113
Connector pin layout for data interfaces..... 498
Context-sensitive help..... 131
Control panel..... 66
Conversational dialog..... 87
Coordinate transformation..... 334
Copying program sections.... 92, 92
Corner rounding..... 185

D

Data Backup..... 97
Data interface..... 470
  Connector pin layouts..... 498
  Set up..... 470
Data output on the screen..... 256
Data transfer software..... 474
Data transfer speed.... 470, 471, 471, 471, 471, 472, 472
Datum management..... 393
Datum setting..... 392
  Without a 3-D touch probe..... 392
Datum shift
  Resetting..... 336
  Using the datum table..... 335
Datum table..... 404
  Transferring test results..... 404
Defining local Q parameters..... 238
Defining nonvolatile Q parameters.. 238
Defining the workpiece blank..... 86
Depart contour..... 174
Dialog..... 87
Directory..... 98, 102
  Copy..... 105
  Create..... 102
  Delete..... 106
Display screen..... 65
Downloading help files..... 136

E

Enter spindle speed..... 156
Error messages..... 125, 125
  Help with..... 125
Ethernet interface..... 476
  Connecting and disconnecting network drives..... 112
  Connection options..... 476
  Introduction..... 476
External access..... 469
External data transfer
  iTNC 530..... 110

F

FCL..... 468
FCL function..... 9
Feature Content Level..... 9
Feed rate..... 390
  Adjust..... 391
  Input options..... 88
  On rotary axes, M116..... 370
Feed rate factor for plunging movements M103..... 313
Feed rate in millimeters per spindle revolution M136..... 314
File
  Create..... 102
File functions..... 333
File manager..... 95, 98
  Call..... 100
  Copying files..... 102
  Copying tables..... 104
  Delete file..... 106
  Directories..... 98
    Copy..... 105
    Create..... 102
  External data transfer..... 110
  File
    Create..... 102
  File type..... 95
  Function overview..... 99
  Overwriting files..... 103
  Protect file..... 109
  Rename file..... 108, 108
  Selecting files..... 101
  Tagging files..... 107
File status..... 100
FK programming..... 201, 201
  Circular paths..... 207
  Fundamentals..... 201
FK-Programming
  Graphics..... 203
FK programming
  Initiating dialog..... 205
  Input options..... 208
    Auxiliary points..... 211
    Circle data..... 209
    Closed contours..... 210
    Direction and length of contour elements..... 208
    End points..... 208
    Relative data..... 212
  Straight lines..... 206
FN14: ERROR: Displaying error messages..... 249, 249
FN16: F-PRINT: Output of formatted texts..... 253, 253
FN18: SYSREAD: Reading system data..... 257, 257
FN19: PLC: Transfer values to the PLC..... 266, 266
FN20: WAIT FOR: NC and PLC synchronization..... 266
FN23: CIRCLE DATA: Calculate a circle from 3 points..... 243
FN24: CIRCLE DATA: Calculate a circle from 4 points..... 243
FN26: TABOPEN: Open a freely definable table..... 344
FN27: TABWRITE: Write to a freely definable table..... 345, 345
FN28: TABREAD: Read from a freely definable table..... 346, 346
FN29: PLC: Transfer values to the PLC..... 268
FN37: EXPORT..... 268
Form view..... 343
Full circle..... 187
Fundamentals..... 80

G

Graphics..... 438
  Display modes..... 440

Magnifying details..... 444
With programming..... 122
Magnification of details.... 124
Graphic simulation..... 445
Tool display..... 445

H

Handwheel..... 380
Hard disk..... 95
Helical interpolation..... 197
Helix..... 197
Help system..... 131
Help with error messages..... 125

I

Initiated tools..... 151
Inserting and modifying blocks... 91
Interrupt machining..... 454
iTNC 530..... 64

L

Look ahead..... 316

M

M91, M92..... 308
Manual Datum Setting..... 414
Manual datum setting
Circle center as datum..... 417
Corner as datum..... 415
In any axis..... 414
Setting a center line as datum 419
Measurement of machining time..... 446
Measuring workpieces..... 420
M functions
For program run inspection.... 307
For spindle and coolant..... 307
See miscellaneous functions.. 306
Mid-program startup..... 457
After power failure..... 457
Miscellaneous functions..... 306
enter..... 306
For coordinate data..... 308
For path behavior..... 311
For rotary axes..... 370
Modes of Operation..... 67
MOD function..... 464
Exit..... 464
Overview..... 465
Select..... 464
Move machine axes
Jog positioning..... 379
Moving the axes
With machine axis direction buttons..... 379
Moving the machine axes..... 379
with the handwheel..... 380

N

NC and PLC synchronization.... 266
NC error messages..... 125
Nesting..... 227
Network connection..... 112

O

Open contour corners M98..... 312
Operating times..... 467
Option number..... 468
Output of formatted Q parameters..... 253

P

Parallel axes..... 329
Parameter programming:See Q parameter programming... 236, 283
Paraxcomp..... 329
Paraxmode..... 329
Part families..... 239
Path..... 98
Path contours..... 182
Cartesian coordinates..... 182
Circle with tangential connection..... 190
Circular path around circle center CC..... 187
Circular path with defined radius..... 188
Overview..... 182
Straight line..... 183
Polar coordinates..... 194
Circular path around pole CC..... 196
Circular path with tangential connection..... 196
Overview..... 194
Straight line..... 195
Path functions..... 168
Fundamentals..... 168
Circles and circular arcs.... 171
Pre-position..... 172
PLANE Function..... 349
PLANE function
Automatic positioning..... 365
Axis angle definition..... 363
Euler angle definition..... 356
Incremental definition..... 362
Point definition..... 360
Positioning behavior..... 365
Projection angle definition..... 355
Reset..... 352
Selection of possible solutions.... 368
Spatial angle definition..... 353
Vector definition..... 358
Plan view..... 441
PLC and NC synchronization.... 266
Pocket table..... 153
Polar coordinates..... 82
Fundamentals..... 82
Programming..... 194
Positioning..... 432
With Manual Data Input..... 432
With tilted working plane..... 310
Preset table..... 393, 405
Transferring test results..... 405
Principal axes..... 81, 81
Program..... 85
Editing..... 90
Opening a new program..... 86
Organization..... 85
Structuring..... 119
Program call
Any desired program as subprogram..... 225
Program defaults..... 326
Program management:See file manager..... 95
Programming graphics..... 203
Programming tool movements... 87
Program run..... 452
Execute..... 453
Interrupt..... 454
Mid-program startup..... 457
Optional block skip..... 461
Overview..... 452
Resuming after interruption.... 455
Program-section repeat..... 223
Projection in three planes..... 441

Q

Q parameter
Export..... 268
Transfer values to PLC..... 266
Transfer values to the PLC..... 268
Q parameter programming.... 236, 283
Additional functions..... 248
Angle functions..... 242
Calculation of circles..... 243
If-then decisions..... 244
Mathematical functions..... 240
Programming notes.... 237, 284, 285, 286, 288, 290
Q parameters..... 236, 283
Checking..... 246
Local parameters QL..... 236
Nonvolatile parameters QR.... 236
Preassigned..... 294

R

Radius compensation..... 164
Entering..... 165
Outside corners, inside corners..... 166

Rapid traverse..... 140
Reading out machine parameters.... 291
Reference system..... 81, 81
Replacing texts..... 94
Retraction from the contour..... 320
Returning to the contour..... 459
Rotary axis..... 370
  Reduce display M94..... 372
  Shortest-path traverse: M126. 371
Rounding corners M197..... 324

S

Screen keyboard..... 116
Screen layout..... 66
Search function..... 93
Selecting the datum..... 84
Selecting the unit of measure.... 86
Setting the BAUD RATE.... 470, 471, 471, 471, 471, 472, 472
Software number..... 468
SPEC FCT..... 326
Special functions..... 326
SQL commands..... 269
Status display..... 69, 69
  Additional..... 70
  General..... 69
Straight line..... 183, 195
String parameters..... 283
Structuring programs..... 119
Subprogram..... 221
Superimposing handwheel positioning M118..... 318
Surface normal vector..... 358
Switch-off..... 378
Switch-on..... 376

T

Teach In..... 89, 183
Test Run..... 448
Test run
  Execute..... 451
Test Run
  Overview..... 448
test run
  Setting speed..... 439
Text File..... 337
Text file
  Delete functions..... 338
  Finding text sections..... 340
  Opening and exiting..... 337
Text variables..... 283
Tilting the Working Plane.. 349, 424
Tilting the working plane
  Manual..... 424
TNCguide..... 131
TNCremo..... 474
TNCremoNT..... 474
Tool change..... 158
Tool compensation..... 163
  Length..... 163
  Radius..... 164
Tool data..... 142
  Call..... 156
  Delta values..... 143
  Entering into the program..... 143
  Enter into the table..... 144
Tool data
  Initiating..... 151
Tool length..... 142
Tool measurement..... 147
Tool name..... 142
Tool number..... 142
Tool radius..... 142
Tool table..... 144
  edit, exit..... 148
  Editing functions..... 151
  Input options..... 144
Tool usage file..... 161
Tool usage test..... 161
Touch probe cycles..... 399
  Manual Operation mode..... 399
  See Touch Probe Cycles User's Manual
Touch probe monitoring..... 321
TRANS DATUM..... 334
Traversing reference marks..... 376
Trigonometry..... 242

U

User parameters
  Machine-specific..... 488
Using touch probe functions with mechanical probes or measuring dials..... 423

V

Version numbers..... 468
Virtual tool axis..... 319

W

Wireless handwheel..... 383
  Assign handwheel holder..... 483
  Configure..... 483
  Selecting transmitter power... 484
  Setting channel..... 484
  Statistical data..... 485
Working space monitoring 447, 451
Workpiece positions..... 83
Writing probing values in a datum table..... 404
Writing probing values in a preset table..... 405

Z

Zero point shift..... 334
  Coordinate input..... 334

HEIDENHAIN

DR. JOHANNES HEIDENHAIN GmbH
Dr.-Johannes-Heidenhain-Straße 5
83301 Traunreut, Germany
☏ +49 8669 31-0
FAX +49 8669 5061
E-mail: info@heidenhain.de

Technical support FAX +49 8669 32-1000
Measuring systems ☏ +49 8669 31-3104
E-mail: service.ms-support@heidenhain.de
TNC support ☏ +49 8669 31-3101
E-mail: service.nc-support@heidenhain.de
NC programming ☏ +49 8669 31-3103
E-mail: service.nc-pgm@heidenhain.de
PLC programming ☏ +49 8669 31-3102
E-mail: service.plc@heidenhain.de
Lathe controls ☏ +49 8669 31-3105
E-mail: service.lathe-support@heidenhain.de

www.heidenhain.de

Touch probes from HEIDENHAIN

help you reduce non-productive time and
improve the dimensional accuracy of the finished workpieces.

Workpiece touch probes

TS 220	Signal transmission by cable
TS 440, TS 444	Infrared transmission
TS 640, TS 740	Infrared transmission

- Workpiece alignment
- Setting datums
- Workpiece measurement

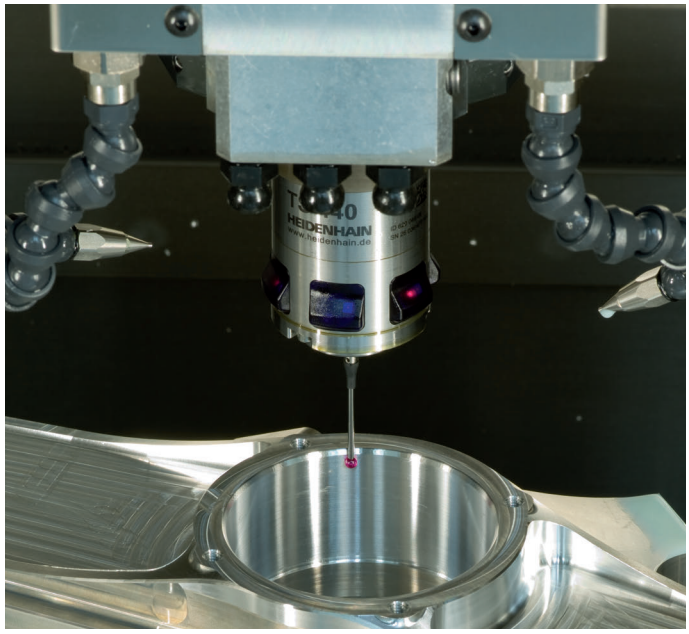

Tool touch probes

TT 140	Signal transmission by cable
TT 449	Infrared transmission
TL	Contact-free laser systems

- Tool measurement
- Wear monitoring
- Tool breakage detection

679222-22 · Ver02 · SW06 · 5/2013 · Printed in Germany · F&W