HEIDENHAIN

User's Manual

ND 231 B

Measured Value Displays

English (en)
12/2001

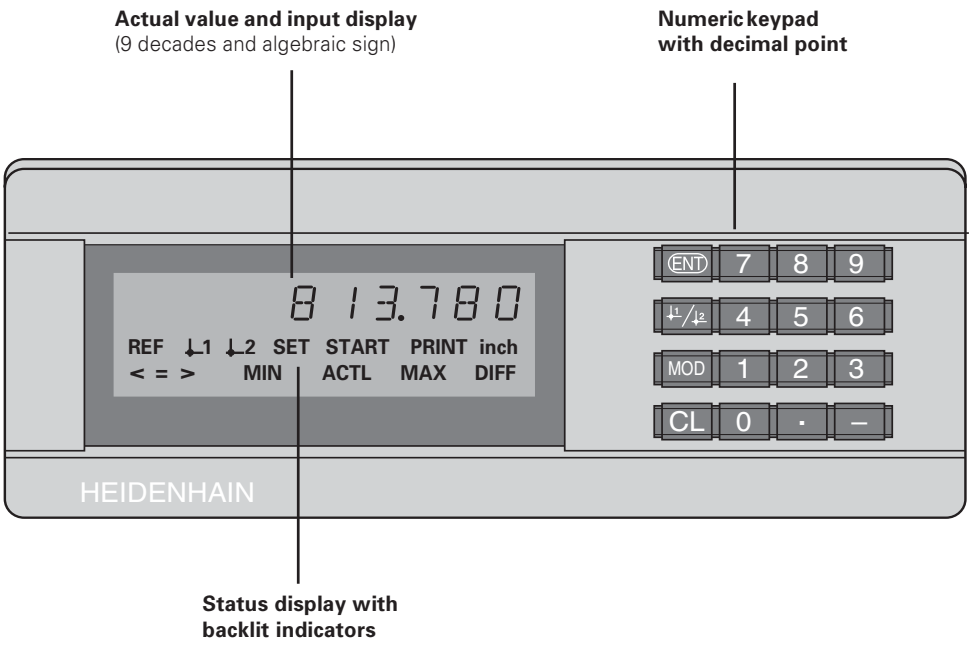
Actual value and input display
(9 decades and algebraic sign)
Numeric keypad
with decimal point
813.780
REF
1
2
SET
START
PRINT
inch
< = >
MIN
ACTL
MAX
DIFF
ENT
7
8
9
4
5
6
MOD
1
2
3
CL
0
.
–
HEIDENHAIN
Status display with
backlit indicators

Key	Function
ENT	• Datum setting • Confirming the entry value • Setting display to value from P79 (P80!) • Exiting the parameter list
↓1/↓2	• Datum selection • Paging backward in the parameter list
MOD	• Outputting the meas. value with "PRINT" • Selecting parameters after switch-on • Paging forward in the parameter list
CL	• Clearing the entry • Resetting the display to zero (P80!) • CL plus MOD: Parameter list • CL plus number: Selecting a parameter • Clear parameter entry and show parameter number
—	• Algebraic sign • Decreasing the parameter value
•	• Decimal point • Increasing the parameter value

Indicator	Meaning
REF	If the decimal point is blinking: Display is waiting for the reference mark to be traversed. If the decimal point is not blinking: Reference mark was traversed— display unit saves the datum in nonvolatile memory **Blinking:** Display is waiting for operator to press ENT or CL
inch	Position values in inches
↓1 / ↓2	Selected datum
PRINT	Measured value output with the MOD key
SET	**Blinking:** Display is waiting for entry values
< / = / >	**Sorting mode:** Measured value less than lower limit / within tolerances / greater than upper limit.
MIN / MAX / DIFF / ACTL / START	Nonfunctional

Items Supplied with ND 231 B	
ND 231 B Two 11 μA_{PP} encoder inputs	Measured value display unit in benchtop housing Id. Nr. 344 993-xx
Power cable	3 m (9.9 ft)
User's Manual	ND 231 B
Adhesive inserts	For stacking the ND 231 B

This Manual describes the ND 231 B measured value display units with software number

349 797-04

and higher. The software number is shown on a label on the back panel of the housing.

Contents

Working with the Display Unit

Installation and Specifications

Position Encoders and Reference Marks

The ND 231 B display unit is intended for use with photoelectrical linear encoders with sinusoidal signals: primarily for HEIDENHAIN **MT length gauges** with 11 μA_{PP}.

These length gauges have **one** reference mark. The scales of other photoelectric linear encoders (see "Linear Encoders") can contain one reference mark or several *distance-coded* reference marks.

If there is an interruption of power, the relationship between the position of the length gauge and the displayed position value is lost. The reference marks on the position encoders and the REF reference mark evaluation feature enable the display unit to quickly reestablish this relationship again when the power is restored.

When a reference mark is crossed over, a signal is generated which identifies that position as a reference point. At the same time, the display unit restores the relationship between length gauge position and display values which you last defined by setting the datum.

If the linear encoders have **distance-coded** reference marks, you need only traverse a maximum of 20 mm to restore the datum (for a signal period of 20 µm).

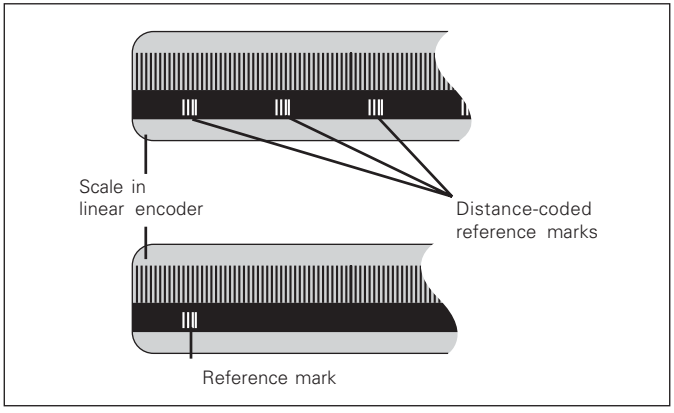

Reference marks on linear encoders

Switch-On, Traversing the Reference Marks

ENT...CL

Turn on the power.
(Switch is located on rear panel).
- Unit displays ND 231 B for 2 seconds.
- Unit displays **ENT...CL** [1].
- REF indicator starts blinking.

5 , 6 9 7

Switch on the reference mark evaluation function.
- The position value that was last assigned to the reference mark position is displayed.
- REF indicator lights.
- Decimal points start blinking.

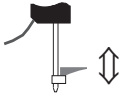

Traverse the reference marks.
Move the plunger until the display starts counting and the decimal points stop blinking. The display is now ready for operation.

For automation purposes, crossing over the reference marks and the display ENT ... CL can be disabled with parameter P82.

REF Mode

Crossing over the reference marks automatically switches the display to REF mode: The last assignment of display values to length gauge positions is stored in nonvolatile memory.

[1] Press the CL key if you choose **not** to cross over the reference marks. Note that, in this case, the relationship between length gauge position and display value will be lost if the power is interrupted or if the unit is switched off.

Datum Setting

The datum setting procedure assigns a display value to a known position. With the ND 200 series, you can set two separate datum points.
There are several ways to set the datum:

- Enter a numerical value, or
- Transfer a value from an operating parameter (see P79, P80), or
- By external signal

↓1/↓2	**Select datum** 1 or 2.
5 / 5	**Enter numerical value** (here, 5).
ENT	**Confirm** the entered **numerical value.**

You can switch between datums 1 and 2 as desired. Datum 2 can be used, for example, for working with incremental dimensions.

When you switch back to datum 1, the display unit resumes display of the MT's actual position.

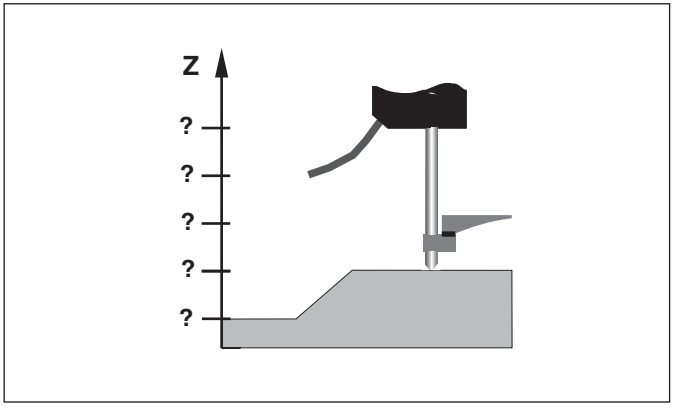

Without datum setting: unknown assignment of measured values to positions

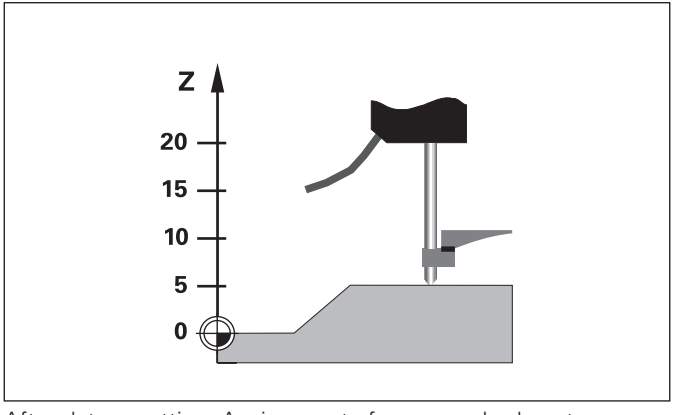

After datum setting: Assignment of measured values to positions

Sorting and Tolerance Checking

In the sorting and tolerance checking mode, the display unit compares the displayed value with the programmed upper and lower sorting limits. The sorting and tolerance checking mode is enabled and disabled with operating parameter **P17**.

Entering sorting limits

Sorting limits are entered in operating parameters **P18** and **P19** (see "Operating Parameters").

Sorting signals

The display indicators and switching outputs at D-sub connection EXT (X41, see applicable section) sort the display value into one of three classes.

Display	Meaning
=	Measured value is within sorting limits
<	Measured value is smaller than lower sorting limit
>	Measured value is greater than upper sorting limit

Operating parameters for sorting and tolerance checking	
`P17 CLASS`	Sorting ON/OFF
`P18 L.CLASS.`	Lower sorting limit
`P19 U.CLASS.`	Lower sorting limit

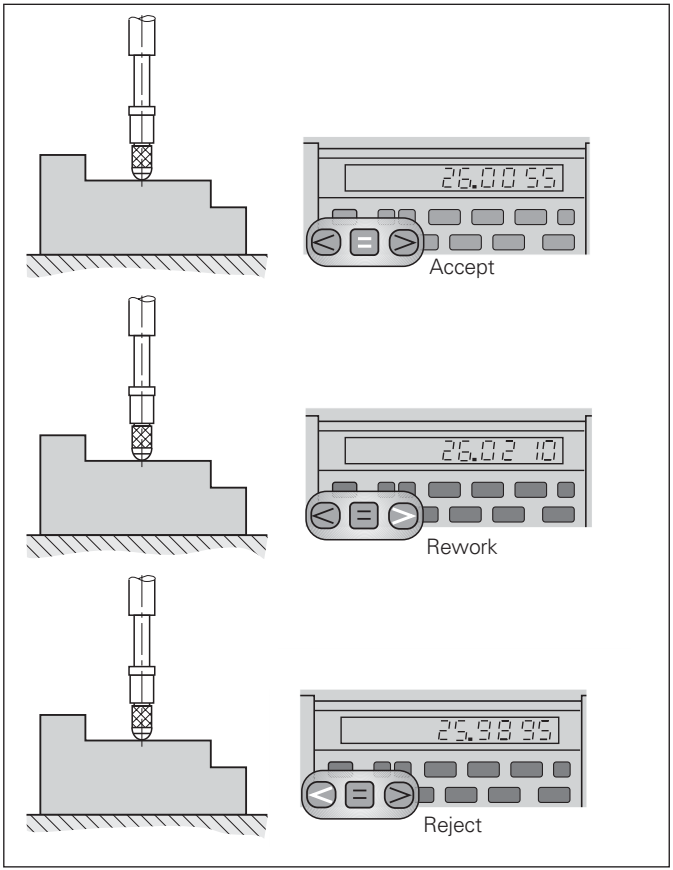

Example: Upper sorting limit = 26.02 mm
Lower sorting limit = 26.00 mm

Measured Value Output

For technical information on the RS-232-C/V.24 data interface (X31), information on the data format, etc., see the chapter "RS-232-C/V.24 Interface (X31)."

Measured values can be transferred over the RS-232-C/V.24 interface (X31), for example to a printer or PC.

There are several ways to start measured value output:

- ➤ Press the MOD key (note the parameter setting P86).
  or
- ➤ Input the command STX (Ctrl B) over the RXD input of the RS-232-C/V.24 interface (X31);
  or
- ➤ Input a signal for measured data output (Pulse or Contact) at the D-sub connection EXT (X41).

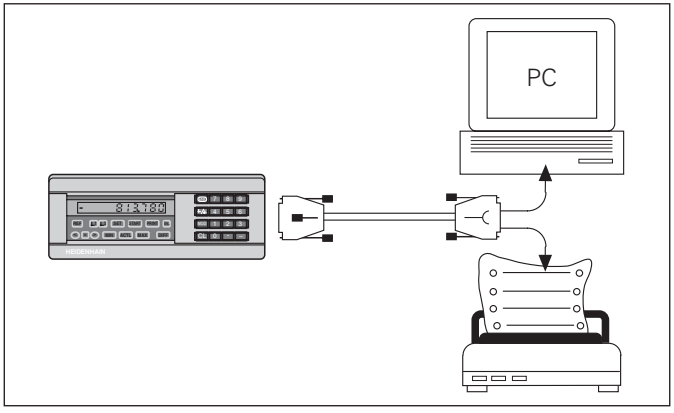

The RS-232-C/V.24 interface (X31) enables you to connect a printer or a PC to your display unit

Display Freeze

With the latch command, the display can be stopped for any period of time. The internal counter remains active. Parameter P23 selects the "display freeze" mode and offers three settings:

- **Concurrent display**, no display freeze—the display value is the current measured value.
- **Frozen display**—display value is frozen and is updated with each signal for measured value output.
- **Frozen/concurrent display**—display remains frozen as long as the latch signal is present; after the signal, the display resumes continuous display of the current measured values.

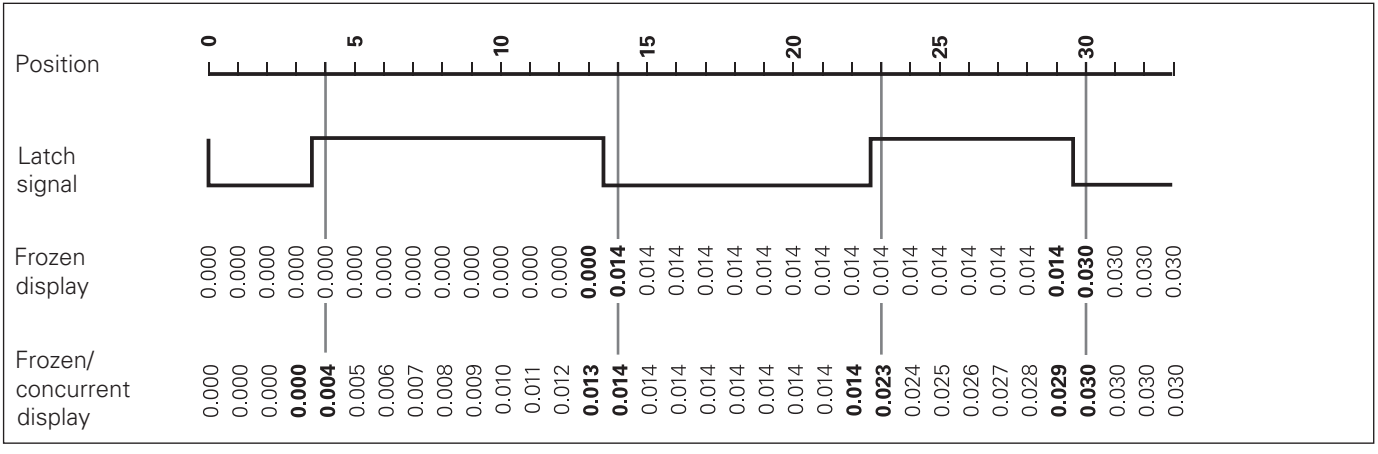

Error Messages

Display	Problem
RS232 FAST	Command for measured value output followed too quickly by another.[1]
SIGNAL X1	Encoder signal is too weak. The scale may be contaminated. [1]
DSR.MISSING	The connected device has not sent a DSR signal. [1]
REF. ERR. X1	The spacing of the reference marks as defined in P43 is not the actual spacing.[1]
FORMAT ERR.	Data format, baud rate, etc. do not match. [1]
FRQ.ERR. X1	Input frequency too high for encoder input. Traversing speed may be too fast. [1]
MEMORY ERR.	Checksum error: Check the datum, operating parameters and compensation values for multipoint axis error compensation. If this error recurs, contact your service agency!

[1] These errors are important for the attached device. The error signal (pin 19) at D-sub connection EXT is active.

Display	Problem
REC. ERROR	Error during reception of parameter and compensation value lists.

Other error displays

If "OVERFLOW" appears, the measured value is too large or too small:

➤ Set a new datum.

or

➤ Move the axis back.

If **all sorting signals light up**, the upper sorting limit is smaller than the lower limit:

➤ Change operating parameters P18 and/or P19.

To clear error messages:

When you have removed the cause of the error:

➤ Clear the error message with the CL key.

Rear Panel

Ports X1, X2, X31 and X41 comply with the recommendations in EN 50 178 for separation from line power.

Encoder input X1/X2	
HEIDENHAIN flange socket	9-pin
Input signals	∿ 11 μA_{PP}
Maximum encoder cable length	30 m (98.5 ft)
Maximum input frequency	100 kHz
RS-232-C/V.24 data interface (X31)	
25-pin D-sub connection (female)	
Switching inputs and outputs EXT (X41)	
25-pin D-sub connection (male)	

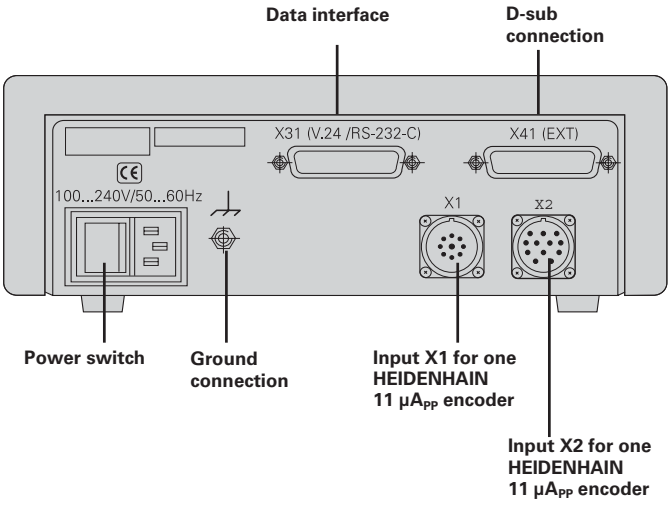

Accessories

Connecting elements	
Connector (female)	25-pin for D-sub connection X41 Id. Nr. 249 154-ZY
Connector (male)	25-pin for D-sub connection X31 Id. Nr. 245 739-ZY
Data interface cable, complete	3 m (9.9 ft), 25-pin for D-sub connection X31, Id. Nr. 274 545-01

Mounting

You can fasten the **ND 231 B** from below by using M4 screws (see illustration at right).

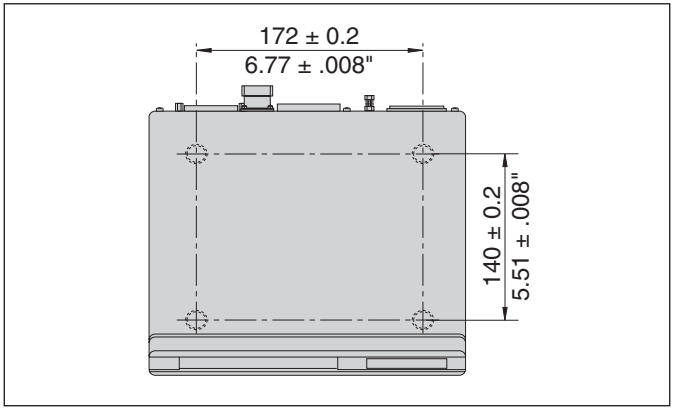

Hole positions for mounting the ND display unit

ND 231 B display units are stackable. Adhesive plug-in feet (supplied with your unit) prevent the stacked units from being moved out of place.

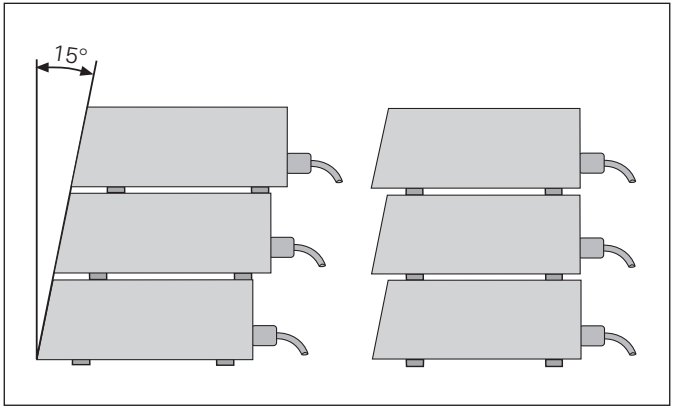

Alternatives of stacking the display units

Power Connection

The rear panel of the ND 231 B contains a connecting jack for a power cord with Euro connector (power cord included in items supplied).

Minimum cross section of the power cord: 0.75 mm^2

Power supply: 100 Vac to 240 Vac (–15% to +10%)
50 Hz to 60 Hz (±2 Hz)

A voltage selector is therefore not necessary.

Danger of electrical shock!
Unplug the power cord before opening the housing. Connect the grounding conductor.
Do not interrupt the grounding conductor.

Danger to internal components!
Do not engage or disengage any connections while the unit is under power. Use only original replacement fuses.

To increase noise immunity, connect the ground terminal on the rear panel to the central ground point of the machine.
(Minimum cross-section: 6 mm^2)

Operating Parameters

Operating parameters allow you to modify the operating characteristics of your ND display unit and define the evaluation of the encoder signals.

Operating parameters are designated by:

- The letter P,
- A two-digit parameter number, and
- An abbreviation.

Example: `P01 INCH`

The **factory settings of the operating parameters** are indicated in the parameter list (see "List of Operating Parameters") in boldface type.

Parameters consist of "user parameters" and "protected operating parameters," which can only be accessed by entering a code number.

User parameters

User parameters are operating parameters that can be changed **without** entering the code number:

P00 to P30, P50, P51, P79, P86, P98

The functions of the individual user parameters are detailed in the list of operating parameters (see "List of Operating Parameters").

To access a user parameter ...

... after switching on the display:

While ENT ... CL is displayed: MOD	Display first user parameter.

... during operation:

Together: CL MOD	Display first user parameter.

To go directly to a user parameter:

Together: CL 1	Press and hold CL while entering the first digit of the parameter number (here, 1).
9	Enter the second digit of the parameter number (here, 9). The display shows the selected user parameter.

Code number for changing protected operating parameters

If you wish to change protected operating parameters, you must first enter the **code number 9 51 48:**

➤ Select the user parameter `P00 CODE`.
➤ Enter the code number 9 51 48.
➤ Confirm entry with ENT.

Parameter P30.1 appears on the display. By paging through the list of operating parameters you can display—and, if necessary, change—each protected operating parameter and, of course, each user parameter.

> Once you have entered the code number, the protected operating parameters remain accessible until the display unit is switched off.

Functions for changing the operating parameters

Function	Key
Page forward in the list of operating parameters	MOD
Page backward in the list of operating parameters	↓1/↓2
Reduce parameter value	–
Increase parameter value	•
Correct entry and display parameter designations	CL
Confirm change or numerical entry, exit the list of operating parameters	ENT

A changed parameter is stored as soon as you

- Exit the list of operating parameters
  or
- Page forward or backward after the change.

List of Operating Parameters

Parameter	Settings / Function
P00 CODE	Enter a **code number:** 9 51 48: To change the protected operating parameters 10 52 96: Multipoint axis error compensation 24 65 84: To lock the keyboard 66 55 44: To show the software version 24 65 82: Distance-to-go display 48 61 53: Input and output of parameter and compensation value lists
P01	**Units of measurement** [1)] Display in millimeters **MM** Display in inches INCH
P06 DISPL.	**Displayed information** Signals from encoder at X1 DISPLAY X1 Signals from encoder at X2 DISPLAY X2 Sum display X1 + X2 X1 **ADD.** X2 Difference display X2 – X2 X1 SUB. X2
P11 SCL	**Scaling factor** Scaling factor off **SCALING OFF** Scaling factor on SCALNG ON
P12.1 SCL	**Scaling factor X1** Enter a numerical value 0.100000 < P12 < 9.999999 Default setting: **1.000000**

Parameter	Settings / Function
P12.2 SCL	**Scaling factor X2** Enter a numerical value 0.100000 < P12 < 9.999999 Default setting: **1.000000**
P17 CLASS	**Sorting and tolerance checking** Sorting and tol. checking ON CLASS ON Sorting and tol. checking OFF **CLASS OFF**
P18 L.CLASS	**Lower limit** for sorting
P19 U.CLASS	**Upper limit** for sorting
P23 DISPL.	**Display stop for measured value output** **Concurrent display**, no display freeze; the display value is the current actual value **DISPL. ACTL.** **Frozen display**; hold display until next measured value output DISPL. HOLD **Frozen/concurrent display**; freeze display as long as Pulse/Contact for measured value output is present DISPL. STOP
P30.1 DIR	**Counting direction X1** Positive counting direction with positive direction of traverse **DIRECT. POS** Negative counting direction with positive direction of traverse DIRECT. NEG

Parameter	Settings/ Function
P30.2 DIR	**Counting direction X2** Positive counting direction with positive direction of traverse **DIRECT. POS**
	Negative counting direction with positive direction of traverse DIRECT. NEG
P31.1 S. PER.	**Signal period of encoder X1** 0.000 000 01 < P31 < 99 999.9999 Default setting: **10 µm**
P31.2 S. PER.	**Signal period of encoder X2** 0.000 000 01 < P31 < 99 999.9999 Default setting: **10 µm**
P33.1 STEP	**Counting mode X1** 0-1-2-3-4-5-6-7-8-9 COUNT 0-1
	0-2-4-6-8 COUNT 0-2
	0-5 **COUNT 0-5**
P33.2 STEP	**Counting mode X2** 0-1-2-3-4-5-6-7-8-9 COUNT 0-1
	0-2-4-6-8 COUNT 0-2
	0-5 **COUNT 0-5**
P38.1 DEC.	**Decimal places X1** [1)] 1 / 2 / 3 / **4** / 5 / 6 (up to 8 for inch display)
P38.2 DEC.	**Decimal places X2** [1)] 1 / 2 / 3 / **4** / 5 / 6 (up to 8 for inch display)

Parameter	Settings/ Function
P40.1 COMP.	Select **encoder compensation X1** No compensation **COMP. OFF**
	Multipoint: up to 64 compensation points COMP. MULTI
	Linear compensation COMP. LIN[1)]
P40.2 COMP.	Select **encoder compensation X2** No compensation **COMP. OFF**
	Multipoint: up to 64 compensation points COMP. MULTI
	Linear compensation COMP. LIN
P41.1 L.COMP.	**Linear error compensation X1** – 99 999.9 < P41 < + 99 999.9 [µm/m] Default setting: **0**

Example: Find input value for P41

Displayed measuring length ..... L_d = 620.000 mm
Actual length (measured, e.g. with the VM 101 comparator system from HEIDENHAIN) ..... L_a = 619.877 mm
Length difference ..... $\Delta L = L_a - L_d = -123$ µm

Compensation factor k (= P41):
$k = \Delta L / L_d = -123$ µm / 0.62 m ..... **k = –198.4** [µm/m]

P41.2 L.COMP.	**Linear error compensation X2** – 99 999.9 < P41 < + 99 999.9 [µm/m] Default setting: **0**

[1)] Depends on signal period (P31) and unit of measure (P01)

Parameter	Settings / Function	
P42.1 to P42.2	**Backlash compensation**	
	Input range (mm):	+9.999 to -9.999
	Default setting: = no backlash compensation	**0.000**

During a change in direction, the mechanical play between the encoder and table, the so-called backlash, can cause error. Positive backlash: The rotary encoder moves before the table, therefore the display value is too high (positive value input). Negative backlash: The rotary encoder moves after the table, therefore the display value is too low (negative value input).

Parameter	Settings / Function	
P43.1 REF	**Reference marks X1**	
	One reference mark	**SINGLE REF.**
	Distance-coded with 500 • SP (SP: signal period)	500 SP
	Distance-coded with 1000 • SP (e.g. for HEIDENHAIN LS ...C)	1000 SP
	Distance-coded with 2000 • SP	2000 SP
	Distance-coded with 5000 • SP	5000 SP

Parameter	Settings / Function	
P43.2 REF	**Reference marks X2**	
	One reference mark	**SINGLE REF.**
	Distance-coded with 500 • SP (SP: signal period)	500 SP
	Distance-coded with 1000 • SP (e.g. for HEIDENHAIN LS ...C)	1000 SP
	Distance-coded with 2000 • SP	2000 SP
	Distance-coded with 5000 • SP	5000 SP
P44.1 REF	**Reference mark evaluation**	
	Evaluate the reference mark	**REF. X1 ON**
	Do not evaluate the reference mark	REF. X2 OFF
P44.2 REF	**Reference mark evaluation** [1]	
	Evaluate the reference mark	**REF. X2 ON**
	Do not evaluate the reference mark	REF. X2 OFF
P45.1 ALARM	**Encoder monitoring X1**	
	No monitoring	ALARM OFF
	Monitor the frequency	FREQUENCY
	Monitor contamination	CONTAMINAT.
	Contamination + frequency	**FRQ. + CONT.**

[1] If an encoder input is not assigned, it must be deactivated. The settings go into effect after switch-on.

Parameter	Settings / Function	
P45.2 ALARM	**Encoder monitoring X2**	
	No monitoring	ALARM OFF
	Monitor the frequency	FREQUENCY
	Monitor contamination	CONTAMINAT.
	Contamination + frequency	**FRQ. + CONT.**
P50 RS232	**Baud rate** 110 / 150 / 300 / 600 / 1200 / 2400 / 4800 / **9600** / 19 200 / 38 400 baud	
P51 RS232	**Additional blank lines during data output** 0 ≤ P51 ≤ 99 Default setting: **1**	BK LINE 1
P62 A1	**Trigger limit 1**	
P63 A2	**Trigger limit 2**	
P79 PRESET	**Value for datum point** Enter numerical value for datum setting over switching input or with ENT key	
P80 ENT-CL	**Set display**	
	No zero reset/Set with CL/ENT	**CL-ENT OFF**
	Zero reset with CL setting disabled with ENT	CL.....ON
	Zero reset with CL and set with ENT to value selected in P79	CL-ENT ON

Parameter	Settings / Function	
P82 DISPL.ON	**Message after switch-on**	
	ENT...CL message	**MESSAGE ON**
	No message	MESSAGE OFF
P85 EXT.REF	**External REF**	
	REF over D-sub port EXT	EXT.REF ON
	No REF over D-sub port EXT	**EXT.REF OFF**
P86 MOD	**Print via MOD key**	
	PRINT via MOD disabled	**PRINT OFF**
	PRINT via MOD enabled	PRINT ON
P98 LANGUA.	**Conversational language**	
	German	**LANGUAGE D**
	English	LANGUAGE GB
	French	LANGUAGE F
	Italian	LANGUAGE I
	Dutch	LANGUAGE NL
	Spanish	LANGUAGE E
	Danish	LANGUAGE DK
	Swedish	LANGUAGE S
	Finnish	LANGUAGE FI
	Czech	LANGUAGE CZ
	Polish	LANGUAGE PL
	Hungarian	LANGUAGE H
	Portuguese	LANGUAGE P

Linear Encoders

The ND 231 B display unit is designed for use together with photoelectrical encoders with 11 μA_{PP} sinusoidal signals.

Display step with linear encoders

You can select a specific display step by adapting the following operating parameters:

- Signal period (P31)
- Counting mode (P33)
- Decimal places (P38)

Example
Linear encoder with a signal period of 10 µm

Desired display step ..... 0.000 5 mm
Signal period (P31) 10
Counting mode (P33) 5
Decimal places (P38) 4

The following tables will help you select the appropriate parameter settings.

Recommended parameter settings for HEIDENHAIN linear encoders with 11 μA_{PP} signals

Model	Signal period in µm	Reference marks	Millimeters			Inches		
			Display step in mm	Counting mode	Decimal places	Display step in inches	Counting mode	Decimal places
	P 31	P 43		P 33	P 38		P 33	P 38
CT MT xx01	2	single	0.0005 0.0002	5 2	4 4	0.00002 0.00001	2 1	5 5
LIP 401A/401R		single	0.0001 0.00005	1 5	4 5	0.000005 0.000002	5 2	6 6
			Recommended only for LIP 401					
			0.00002 0.00001 0.000005	2 1 5	5 5 6	0.000001 0.0000005 0.0000002	1 5 2	6 7 7
LF 103/103C LF 401/401C LIF 101/101C LIP 501/501C	4	single/5000	0.001 0.0005 0.0002 0.0001	1 5 2 1	3 4 4 4	0.00005 0.00002 0.00001 0.000005	5 2 1 5	5 5 5 6
LIP 101		single	0.00005	5	5	0.000002	2	6
			Recommended only for LIP 101					
			0.00002 0.00001	2 1	5 5	0.000001 0.0000005	1 5	6 7
MT xx	10	single	0.0005 0.0002 0.0001	5 2 1	4 4 4	0.00002 0.00001 0.000005	2 1 5	5 5 6
LS 303/303C LS 603/603C	20	single/1000	0.01 0.005	1 5	2 3	0.0005 0.0002	5 2	4 4

Recommended parameter settings for HEIDENHAIN linear encoders with 11 μA_{PP} signals (continued)

Model	Signal period in µm	Reference marks	Millimeters			Inches		
			Display step in mm	Counting mode	Decimal places	Display step in inches	Counting mode	Decimal places
	P 31	P 43		P 33	P 38		P 33	P 38
LS 106/106C LS 406/406C LS 706/706C	20	single/1000	0.001 0.0005	1 5	3 4	0.00005 0.00002	5 2	5 5
ST 1201		-						
LB 302/302C LIDA 10x/10xC	40	single/2000	0.005 0.002 0.001 0.0005	5 2 1 5	3 3 3 4	0.0002 0.0001 0.00005 0.00002	2 1 5 2	4 4 5 5
			Recommended only for LB 302					
			0.0002 0.0001	2 1	4 4	0.000001 0.0000005	1 5	5 6
LB 301/301C	100	single/1000	0.005 0.002 0.001	5 2 1	3 3 3	0.0002 0.0001 0.00005	2 1 5	4 4 5
LIM 501	10240	single	0.1 0.01 0.05	1 1 5	1 2 2	0.005 0.0005 0.002	5 5 2	3 4 3

Multipoint Axis Error Compensation

If you want to use the multipoint axis error compensation feature, you must:
- Activate the feature with operating parameter 40 (see operating parameters),
- Traverse the reference marks after switching on the display unit,
- Enter a compensation-value table

Your machine may have a nonlinear axis error due to factors such as axis sag or leadscrew errors. Such deviations are usually measured with a comparator measuring system (such as the HEIDENHAIN VM 101).

An axis can only be corrected in relation to **one** axis that has an error. A compensation table with a total of up to 64 compensation values can be entered for every axis.

You select the compensation table through P00 CODE and by entering the code number 10 52 96 (see "Operating Parameters").

Determining the compensation values

To determine the compensation values (e.g. with a VM 101), you must select the compensation table and then press the "–" key to select the REF display.

The letter "R.1" or "R.2" at the left of the display indicates that the displayed position value is given with respect to the reference mark. If "R.1" or "R.2" blinks, you must traverse the reference mark.

Entries in the compensation-value table

- Axis to be corrected: X1 or X2
- Axis causing the error: X1 or X2
- Datum:
  Here you enter the point at which the compensation is to begin. This point indicates the absolute distance to the reference point.

Do not change the datum after measuring the axis error and before entering the axis error into the compensation table.

- Spacing of the compensation points:
  The spacing of the compensation points is expressed as:
  $$\text{Spacing} = 2^{x}\ [\mu m].$$
  Enter the value of the exponent *x* into the compensation value table.
  Minimum input value: 6 (= 0.064 mm)
  Maximum input value: 20 (= 1048.576 mm)
  Example: 900 mm traverse with 15 compensation points ==> 60.000 mm spacing between points.
  Nearest power of two: 2^{16} = 65.536 mm (see "Table for determining the point spacing")
  Input value in the table: 16
- Compensation value:
  You enter the measured compensation value (in millimeters) for the displayed compensation point. Compensation point 0 always has the value 0 and cannot be changed.

Table for determining the point spacing

Exponent	Point spacing in mm	Point spacing in inches
6	0.064	0.0023“
7	0.128	0.0050“
8	0.256	0.0100“
9	0.512	0.0200“
10	1.024	0.0403“
11	2.048	0.0806“
12	4.016	0.1581“
13	8.192	0.3225“
14	16.384	0.6450“
15	32.768	1.290“
16	65.536	2.580“
17	131.072	5.160“
18	262.144	10.32“
19	524.288	20.64“
20	1048.576	41.25“

Selecting the compensation table, entering an axis correction

CL Together with MOD	Select the operating parameters.
↓1/↓2	Select P00 CODE.
P00 CODE	
1 0 5 2 9 6 ENT	Enter the code number 10 52 96, confirm with ENT.
AXIS X1	
• MOD	Select the axis to be corrected (X1 or X2). Press MOD to go to the next input box.
X1 FCT. X1 or **X1 FCT X2**	
• MOD	Select the axis causing the error (X1 or X2). Press MOD to select the datum.
DATUM X1 or X2 (appears for approx. two seconds)	
2 7 MOD	Enter the active datum for the error on the axis to be corrected, e.g. 27 mm. Press MOD to select the next input box.
SPACING	
1 0 4 x MOD	Enter the spacing of the compensation points on the axis to be corrected, for example 2^{10} µm (equals 1.024 mm). Press MOD four times to select COMP. NR. 01. (You cannot enter values in the POS. NR. 00, COMP. NR. 00 and POS. NR. 01 boxes.)
COMP. NR. 01	
0 • 0 1 2 x MOD	Enter the associated compensation value, e.g. 0.01 mm. Press MOD twice to select COMP. NR. 02. (You cannot enter any values in the POS. NR. 02 box).
COMP. NR. 02	
0 • 0 2 2 x MOD	Enter all further compensation points. If you want so select a compensation point directly, press CL and simultaneously enter the desired compensation point number.
ENT	Conclude entry.

Deleting a compensation value table

CL Together with MOD	Select the operating parameters.
↓1/↓2	Select P00 CODE.
P00 CODE	
1 0 5 2 9 6 ENT	Enter the code number 10 52 96, confirm with ENT.
AXIS X1	
• ↓1/↓2	Select the compensation-value table (axis X1 or X2). Select the “delete” function.
DELETE X1 OR X2	
ENT	Confirm with ENT or cancel with CL.
ENT	Exit the compensation-table mode.

Switching Inputs and Outputs EXT (X41)

Danger to internal components!
Voltage sources for external circuitry must conform to the recommendations in EN 50 178 for low-voltage electrical separation. Connect inductive loads only with a quenching diode parallel to the inductance.

Only use shielded cable!
Connect the shield to the connector housing.

Outputs at D-sub connection EXT (X41)

Pin	Function
14	Display value is zero
15	Measured value ≥ trigger limit A1 (P62)
16	Measured value ≥ trigger limit A2 (P63)
17	Measured value < lower sorting limit (P18)
18	Measured value > upper sorting limit (P19)
19	Error (see “Error Messages”)

Inputs at D-sub connection EXT (X41)

Pin	Function
1, 10	0 V
2	Reset display to zero, clear error message
3	Set display to the value selected in P79
4	Ignore reference mark signals (X1)
24	Ignore reference mark signals (X2)
6	Display the position of encoder X1
7	Display the position of encoder X2
8	Display sum X1 + X2
9	Display difference X1 - X2
22	Pulse: Transmit measured value
23	Contact: Transmit measured value
25	Enable or disable REF mode (current REF status is changed)
5, 12, 13	*Do not assign*
11, 20, 21	*Vacant*

Inputs

Input signals
Internal pull-up resistor 1 kΩ, active with low level
Trigger by making contact against 0 V **or** by low-level signal over TTL logic device
Delay for set/zero reset: $t_d \leq 2$ ms
Minimum pulse duration for all signals: $t_{min} \geq 30$ ms

Signal level of inputs

Status	Level
High	$+ 3.9\ V \leq U \leq + 15\ V$
Low	$- 0.5\ V \leq U \leq + 0.9\ V$; $I \leq 6$ mA

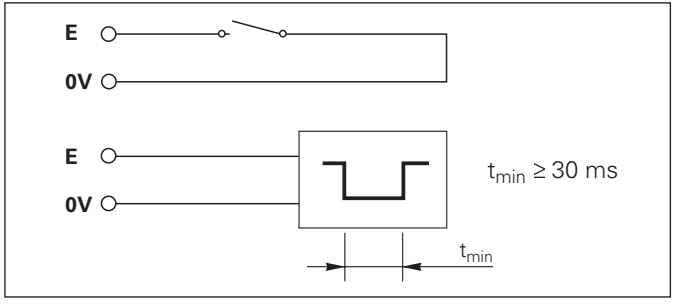

Outputs

Output signals
"Open collector" outputs, active with low level
Delay until signal output: $t_d \leq 30$ ms
Signal duration of zero signal, trigger limit A1, A2: $t_0 \geq 180$ ms

Signal level of outputs

Status	Level
High	$U \leq + 32\ V$; $I \leq 10\ \mu A$
Low	$U \leq + 0.4\ V$; $I \leq 100$ mA

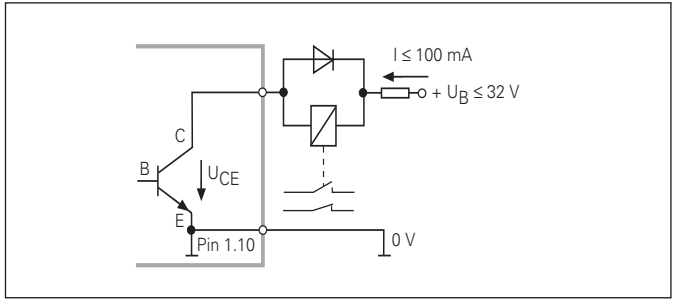

Setting and zero resetting the display

With an external signal, you can set the display to the value selected in parameter P79 (pin 3) or reset each axis to zero (pin 2).

Enabling and disabling REF mode

Operating parameter P85 allows you to activate the input (pin 25) which will be used for setting the display externally to REF mode when the unit is switched on or when the power is restored after an interruption. The next signal deactivates REF mode again (switchover function).

Ignoring reference mark signals

If this input (pin 4 or pin 24) is active, the display will ignore all reference mark signals. A typical application of this function is for measuring lengths with a rotary encoder and spindle; in this case, a cam switch releases the reference mark signal at a preset position.

Selecting the display information

You can select the display information of the ND 231 B
- through switching inputs (see D-sub connection EXT) **or**
- with the operating parameter P06 (see "List of Operating Parameters").

If you use the switching inputs, the setting of P06 has no influence on the display information.

If none of the inputs for the selection of display information (pin 6 to pin 9) is active, or if more than one is active, then the settings of the operating parameter P06 apply:
- Position if the encoder on X1: P06 = DISPLAY X1
- Position if the encoder on X2: P06 = DISPLAY X2
- Sum display: P06 = X1 ADD. X2
- Difference display: P06 = X1 SUB. X2

Switching signals

As soon as the trigger points defined in parameters are reached, the corresponding outputs (pins 15, 16) are activated. You can set up to two trigger points. The switching point "zero" has a separate output (see "Zero crossover").

Signals for sorting and tolerance checking

If the sorting limits defined in parameters are exceeded, the corresponding outputs (pins 17, 18) are activated.

Signals	Operating parameters	Pin
Switching signals	P62, switching limit 1	15
	P63, switching limit 2	16
Sorting signals	P18, lower sorting limit	17
	P19, upper sorting limit	18

Zero crossover

The display value "zero" activates the corresponding output (pin 14). Minimum signal duration is 180 ms.

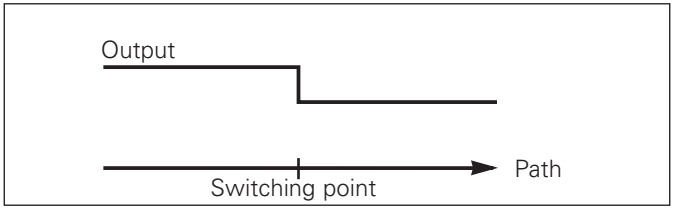

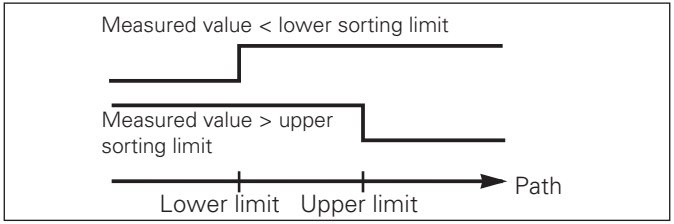

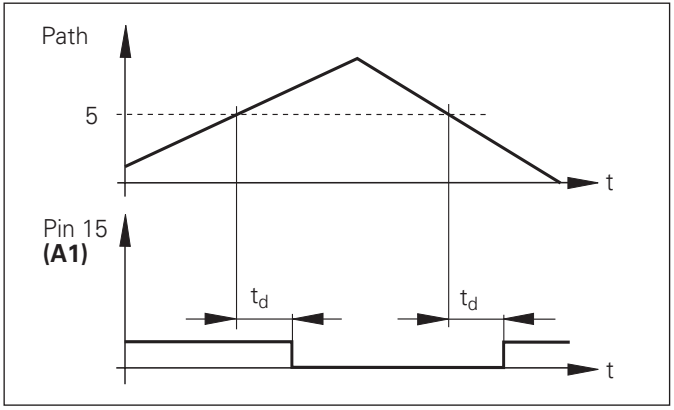

Time curve of signal at pin 15 for trigger limit (A1) = 5 mm , $t_d \leq 30$ ms

Switching signal for errors

The display unit permanently monitors functions such as measuring signal, input frequency, and data output, and displays an error message if it detects an error.

If errors occur that seriously influence measurement or data output, the display unit activates a switching output. This feature allows monitoring of automated processes.

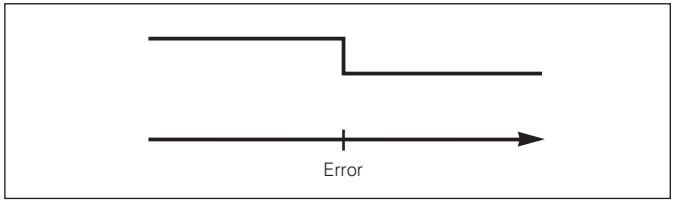

Locking the Keypad

You can lock or release the keypad by entering the code number 24 65 84:

➤ Select the user parameter **P00 CODE** (see "Operating Parameters").

➤ Enter the code number 24 65 84.

➤ Confirm the entry with ENT.

➤ With the "•" or "–" key, select **KEYS ON** or **KEYS OFF.**

➤ Confirm your selection with ENT.

If the keypad is locked, you can select only the datum or **P00 CODE** through the MOD key.

Displaying the Software Version

To display the software version of the display unit, enter the code number 66 55 44:

➤ Select the user parameter **P00 CODE.**

➤ Enter the code number 66 55 44.

➤ Confirm your entry with ENT.

➤ The display unit shows the software number.

➤ With the "–" key you can switch the display to the date of issue.

➤ To exit the software version display mode, press ENT.

Distance-to-Go Mode

Normally, the display shows the actual position of the encoder. However, it is often more helpful to display the remaining distance to an entered nominal position—especially when you are using the display unit for machine tools and automation purposes. You can then position simply by traversing to display value zero.

You can access the distance-to-go display by entering the **code number 246 582.**

Display	Meaning
DELTA ON	Distance-to-go display active
DELTA OFF	Distance-to-go display not active

"Traversing to zero" with distance-to-go display

➤ Select datum point 2.
➤ Enter the nominal position.
➤ Move the axis until the display value is zero.

Function of switching outputs A1 and A2

In the distance-to-go mode, switching outputs A1 (pin 15) and A2 (pin 16) have a different function: they are symmetrical to the display value zero. For example, if a switching point of 10 mm is entered in P62, output A1 switches at both +10 mm and –10 mm. The figure below shows output signal A1 when approaching zero from the negative direction.

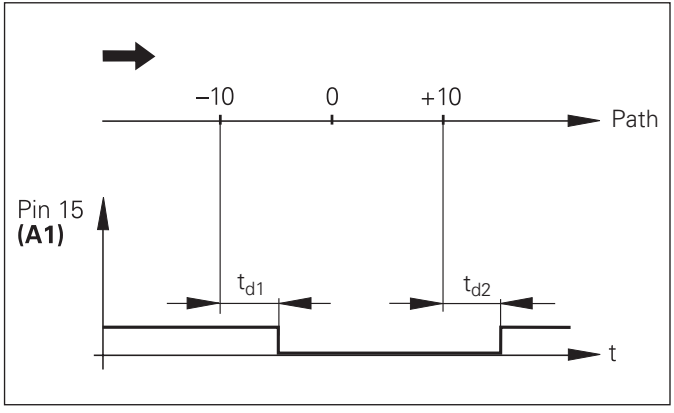

Time curve of a signal for switching limit (A1) = 10 mm , $t_{d1} \leq$ 30 ms, $t_{d2} \leq$ 180 ms

RS-232-C/V.24 Data Interface (X31)

The RS-232-C/V.24 interface (X31) of your display unit enables you to transmit measured data in ASCII format, for example to a printer or PC.

Connecting cable

You can use a connecting cable with full wiring (figure at upper right) or simplified wiring (below right). A cable with full wiring is available from HEIDENHAIN (Id. Nr. 274 545-...). On this type of cable, pin 6 and pin 8 are additionally connected over a jumper.

Maximum cable length: 20 m (66 ft)

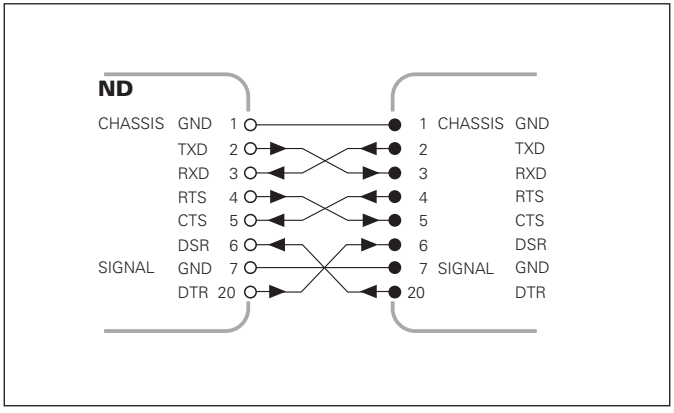

Full wiring

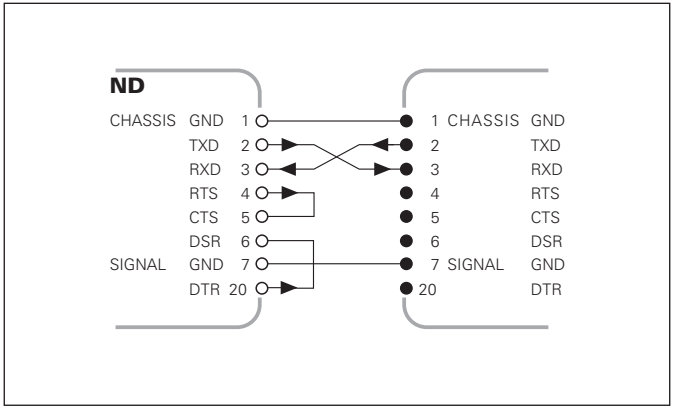

Simplified wiring

Pin layout RS-232-C/V.24 (X31)

Pin	Signal	Assignment
1	CHASSIS GND	Chassis ground
2	TXD	Transmitted data
3	RXD	Received data
4	RTS	Request to send
5	CTS	Clear to send
6	DSR	Data set ready
7	SIGN. GND	Signal ground
8 to 19	–	*Not assigned*
20	DTR	Data terminal ready
21 to 25	–	*Not assigned*

Levels for TXD and RXD

Logic level	Voltage level
Active	– 3 V to – 15 V
Not active	+ 3 V to +15 V

Levels for RTS, CTS, DSR and DTR

Logic level	Voltage level
Active	+ 3 V to + 15 V
Not active	– 3 V to – 15 V

Data format and control characters

Data format	1 start bit 7 data bits Even parity bit 2 stop bits
Control characters	Call measured value: STX (Ctrl B) Interrupt DC3 (Ctrl S) Continue DC1 (Ctrl Q) Interrogate error message: ENQ (Ctrl E)

Example: Data sequence during measured value output

Measured value = – 5.23 mm
The measured value is within the sorting limits (=) and the selected display is X1.

Measured value output

-	5 . 2 3			=	1	< C R >	< L F >
①	②	③	④	⑤	⑥	⑦	⑧

① Algebraic sign
② Numerical value with decimal point (10 characters on the whole, leading zeros are transferred as blanks.)
③ Blank space
④ Unit: Blank space = mm; " = inch; ? = fault
⑤ Sorting status (<, >, =; ? if P18 > P19)
or blank space
⑥ Axis designation (1 = X1, 2 = X2, A = X1 + X2, S = X1 – X2)
⑦ CR (carriage return)
⑧ LF (line feed)

Operating parameters for measured value output

Parameter	Function
P50 RS232	Baud rate
P51 RS232	Number of additional blank lines for measured value output

Display freeze during measured value output

In operating parameter P23, you can specify how the measured value output signal will affect the display unit.

Display freeze during measured value output	P23
Concurrent display, no display freeze: The display value is the current measured value	DISPL. ACTL.
Frozen display: Display is stopped (frozen) and updated by every measured value output signal	DISPL. HOLD
Frozen/concurrent display: Display is frozen as long as a measured value output signal is present	DISPL. STOP

Measured value output via PRINT function

➤ Press the MOD key (note parameter setting P86).

Duration of measured value transfer

$$t_D = \frac{187 + (11 \bullet \text{number of blank lines})}{\text{baud rate}} \text{ [s]}$$

Measured value output after signal through the "Contact" or "Pulse" inputs

To start measured value output through the EXT interface (X41) you can either:

➤ Close the "Contact" input (pin 23 on X41) against 0 V, for example with a simple switch (make contact);
or

➤ Close the "Pulse" input (pin 22 on X41) against 0 V, for example by triggering the input with a TTL logic device (such as SN74LSxx).

Characteristic times for measured value output

Process	Time
Minimum duration of "Contact" signal	$t_e \geq 7$ ms
Minimum duration of "Pulse" signal	$t_e \geq 1.5$ µs
Storage delay after "Contact"	$t_1 \leq 5$ ms
Storage delay after "Pulse"	$t_1 \leq 1$ µs
Measured value output after	$t_2 \leq 57$ ms
Regeneration time	$t_3 \geq 0$

Duration of measured value transfer

$$t_D = \frac{187 + (11 \bullet \text{number of blank lines})}{\text{baud rate}} \text{ [s]}$$

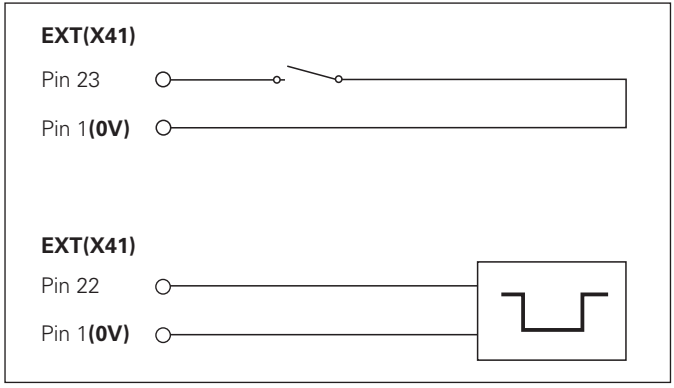

Triggering the "Contact" and "Pulse" inputs at D-sub connection EXT (X41)

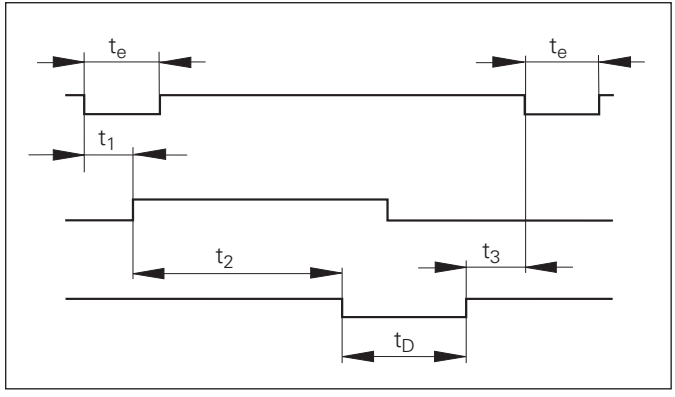

Signal transit times for measured value output after "Pulse" or "Contact"

Measured value output with CTRL B

If the display unit receives the control character STX (CTRL B) over the RS-232-C/V.24 interface, it immediately transmits the current measured value back over the interface. CTRL B is received over the RXD line of the interface, and the measured values are transmitted over the TXD line.

The measured value can be received and saved using a terminal program (e.g. HyperTerminal, which is a component of Windows®).

The basic program below shows the fundamental structure of a program for measured value output.

Characteristic times for measured value output

Process	Time
Storage after	$t_1 \leq 1$ ms
Measured value output after	$t_2 \leq 50$ ms
Regeneration time	$t_3 \geq 0$

If functions such as series of measurements with DIFF value display are active, these times are prolonged.

Duration of measured-value transfer

$$t_D = \frac{187 + (11 \cdot \text{number of blank lines})}{\text{Baud rate}} \text{ [s]}$$

```
10  L%=18
20  CLS
30  PRINT "V.24/RS-232-C"
40  OPEN "COM1:9600,E,7" AS#1
50  PRINT #1, CHR$ (2);
60  IF INKEY$<>""THEN 130
70  C%=LOC(1)
80  IF C%<L%THEN 60
90  X$=INPUT$(L%,#1)
100 LOCATE 9,1
110 PRINT X$;
120 GOTO 50
130 END
```

BASIC program for measured value output over “Ctrl B”

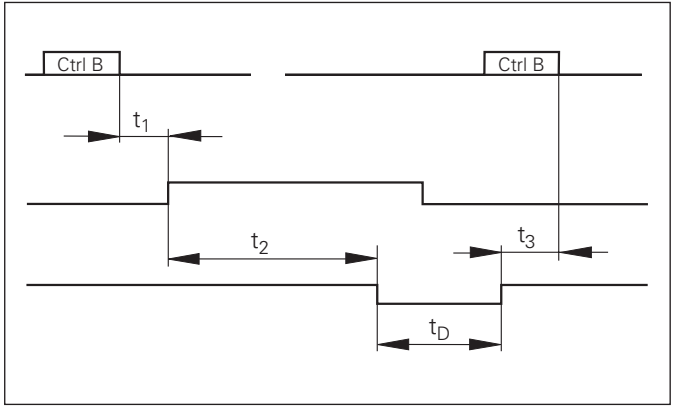

Signal transit times for measured value output after "Ctrl B"

Input/Output of Parameter and Compensation-Value Lists

To call the "data transfer" function:

CL together with MOD	Select the operating parameters.
↓1/↓2	Select P00 CODE.

P00 CODE

4 8 6 1 5 3 ENT	Enter the code number 48 61 53 and confirm with ENT.

Data transfer function:

TRANSFER

ENT	Continue with ENT.

SEND PARAM.

If reqd. ENT • or —	Press the ENT key if you want to transmit the parameter list over the RS-232-C/V.24 interface. After transmission, return to the beginning ("TRANSFER") to transmit or receive further lists. Press the decimal point key to continue in the data tansfer menu

REC. PARAM.

If reqd. • or —	The display unit is ready to receive a parameter list over the RS-232-C/V.24 interface. After successful reception of the parameter list, the display unit resets itself and restarts. Continue in the data transfer menu with the decimal point key.

SEND CMP.1

If reqd. ENT • or —	With the ENT key, you transmit the compensation-value list for axis 1 over the RS-232-C/V.24 interface. After transmission, return to the beginning ("TRANSFER") to transmit or receive more lists. Continue in the data transfer menu with the decimal point key.

SEND CMP.2

If reqd. ENT • or —	With the ENT key, you transmit the compensation-value list for axis 2 over the RS-232-C/V.24 interface. After transmission, return to the beginning ("TRANSFER") to transmit or receive more lists. Continue in the data transfer menu with the decimal point key.

REC. COMP.	
If reqd. • or –	The display unit is ready to receive a compensation-value list (axis 1 or 2) over the RS-232-C/V.24 interface. After successful reception, return to the beginning ("TRANSFER") to transmit or receive more lists. Continue in the data transfer menu with the decimal point key.
CL	Exit the data transfer function.

Note on the input/output of parameter and compensation-value lists

With a terminal program (e.g. HyperTerminal, included with Windows®), you can receive the lists output by the display unit over the RS-232-C/V.24 interface as text files and save them on your PC. Each list must be saved as a separate text file. You can then use the terminal program to transmit the text files back to the display unit .

If you wish, you can edit the text files with a text editor and change the parameter values, for example. However, this requires knowledge of the different output formats of the lists (see following pages). When receiving lists, the display unit expects the same list structure as used for the output.

When receiving lists, the display unit first waits for the starting character < * >. The receiving mode ends as soon as the display unit has received the final character < * >.

The lists received are first checked for the type of display unit (line 2 of output list). The receiving display unit accepts only lists prepared by the same type of display unit. Furthermore, the list is checked for completeness. Lists that contain, for example, too many or too few parameters are ignored. If an error occurs, the following error message appears:

REC. ERROR

To clear the error message, press the CL key.

If the display unit receives invalid parameter values, it sets the respective operating parameter to the default setting.
Example: “P01 INCH = INCH = 3”
The value 3 is not allowed. The parameter P01 is set to the default setting “P01 MM = MM = 0”.

Output Format of the Parameter List

1st line

Each parameter output begins with the start character < * > (HEX: 0x2A)

*	<CR>	<LF>

3 characters

2nd line

Output of the counter designation

N D - 2 3 1 B	M M	<CR> <LF>
13 characters Model of display unit	5 characters Unit of meas.	2 characters End of line

Subsequent lines for the individual parameters:

a: Parameters:

Parameter settings can be changed with the MINUS key (e.g.: counting direction positive/counting direction negative etc.)
Examples:

P 1 1 S C L	=	S C A L I N G . O F F	=	0	<CR> <LF>
15 characters	3 char.	13 characters	3 char.	6 characters	2 characters

P 5 0 R S 2 3 2	=	3 8 4 0 0 B A U D	=	3 8 4 0 0	<CR> <LF>
15 characters Parameter designation left-aligned Text right-aligned	3 char. Separator block	13 characters Parameter in plain language right-aligned	3 char. Separator block	6 characters Parameter value right-aligned	2 characters End of line

b: Parameters:

The parameter setting can be changed by entering a value
(e.g.: LINEAR COMP. 13.600 etc.).

P	1	8					L	.	C	L	A	S	S	.		=				+			1	2	0	.	0	0	0	0	<CR>	<LF>
15 characters															3 char.				13 characters											2 characters	

P	4	1						L	.	C	0	M	P	.		=				-					1	4	0	0	.	0	<CR>	<LF>
15 characters															3 char.				13 characters											2 characters	
Parameter designation left-aligned								Text right-aligned							Separator block				Parameter value right-aligned											End of line	

Last line:

Each parameter list ends with the final character <*> (HEX: 0x2A)

*	<CR>	<LF>

The parameter text is sent in the language you have set and corresponds to the dialog text that is shown on the display unit.
The parameter value, not the text, is definitive when the parameters are transferred to the display unit.

Parameter list for ND 231 B: (factory default setting)

Parameter list	Description
*	Start character (*);
ND-231 B MM	Model of display unit; MM or IN;
P01 MM = MM = 0	Unit of measure: MM = 0; INCH = 1;
P06 DISPL. = X1 ADD. X2 = 2	X1 = 0; X2 = 1; X1 ADD. X2 = 2; X1 SUB. X2 = 3;
P11 SCL = SCALING OFF = 0	SCALING FACTOR OFF = 0; ON = 1;
P12.1 SCL = 1.000000	X1: SCALING FACTOR = 1.000000; (value input without sign)
P12.2 SCL = 1.000000	X2: SCALING FACTOR = 1.000000; (value input without sign)
P17 CLASS. = CLASS. OFF = 0	Sorting : CLASS. OFF = 0; CLASS. ON = 1;
P18 L.CLASS. = + 0.0000	Lower limit: L.CLASS = 0; (value input)
P19 U.CLASS. = + 0.0000	Upper limit: U.CLASS = 0; (value input)
P23 DISPL. = DISPL. ACTL. = 0	DISPLAY: ACTUAL = 0; FREEZE = 1; STOP = 2;
P30.1 DIR = DIRECT. POS = 0	X1: COUNTING DIRECTION POS = 0; NEG = 1;
P30.2 DIR = DIRECT. POS = 0	X2: COUNTING DIRECTION POS = 0; NEG = 1;
P31.1 S. PER. = 10	X1: SIGNAL PERIOD = 10 µm; (value input without sign)
P31.2 S. PER. = 10	X2: SIGNAL PERIOD = 10 µm; (value input without sign)
P33.1 STEP = COUNT 0-5 = 5	X1: COUNTING MODE 0-5 = 5; 0-2 = 2; 0-1 = 1;
P33.2 STEP = COUNT 0-5 = 5	X2: COUNTING MODE 0-5 = 5; 0-2 = 2; 0-1 = 1;
P38.1 DEC. = DP POS. 4 = 4	X1: DECIMAL PLACES 4 (range: 1-8)
P38.2 DEC. = DP POS. 4 = 4	X2: DECIMAL PLACES 4 (range: 1-8)
P40.1 COMP. = COMP. OFF = 0	X1: COMPENSATION OFF = 0; LIN = 1; MULTI = 2;
P40.2 COMP. = COMP. OFF = 0	X2: COMPENSATION OFF = 0; LIN = 1; MULTI = 2;
P41.1 L.COMP. = + 0.0	X1: LINEAR COMPENSATION = 0 µm/m (value input)
P41.2 L.COMP. = + 0.0	X2: LINEAR COMPENSATION = 0 µm/m (value input)
P42.1 BKLASH = + 0.0000	BACKLASH compensation = 0.0000 mm (value input)
P42.2 BKLASH = + 0.0000	BACKLASH compensation = 0.0000 mm (value input)
P43.1 REF = SINGLE REF. = 0	X1: SINGLE REF. = 0; 500; 1000; 2000; 5000 SP;
P43.2 REF = SINGLE REF. = 0	X2: SINGLE REF. = 0; 500; 1000; 2000; 5000 SP;
P44.1 REF = REF. ON = 1	X1: REF.ON = 1; REF. OFF = 0;
P44.2 REF = REF. ON = 1	X2: REF.ON = 1; REF. OFF = 0;

Parameter list			Description
P45.1	ALARM =	FRQ.+ CONT. = 3	X1: OFF=0; FRQ.=1; CONTAMINAT.=2; FRQ+CONT.=3;
P45.2	ALARM =	FRQ.+ CONT. = 3	X2: OFF=0; FRQ.=1; CONTAMINAT.=2; FRQ+CONT.=3;
P50	RS232 =	9600 BAUD = 9600	BAUD RATE = 9600; (110-38400)
P51	RS232 =	BK LINE 1 = 1	LINE FEEDS = 1; (0-99)
P62	A1 =	+ 0.0000	Switching limit 1: A1 = 0; (value input)
P63	A2 =	+ 0.0000	Switching limit 2: A2 = 0; (value input)
P79	PRESET =	+ 0.0000	DATUM SETTING = 0; (value input)
P80	ENT-CL =	CL-ENT OFF = 0	CL-ENT OFF=0; CL-ON = 1; CL-ENT ON = 2;
P82	DRO.ON =	ENT..CL ON = 1	DISPLAY: ENT...CL ON = 1; ENT...CL OFF = 0;
P85	EXT.REF =	EXT.REF OFF = 0	EXTERNAL REF OFF = 0; EXTERNAL REF ON = 1;
P86	MOD =	PRINT OFF = 0	MOD KEY: PRINT OFF = 0; PRINT ON = 1;
P98	LANGUA. =	LANGUAGE.DE = 1	NATIONAL LANGUAGE: 0 = EN; 1 = DE; 2 = FR; 3 = IT; 4 = NL; 5 = ES; 6 = DA; 7 = SV; 8 = FI; 9 = CS; 10 = PL; 11= HU; 12 = PT;
*			Final character (*);

Output Format of the Compensation-Value Table

A separate compensation-value table is prepared and transmitted for each axis to be corrected.

Line: Start

Each compensation-value output begins with the start character < * > (HEX: 0x2A)

*	<CR>	<LF>

3 characters

Line: Counter model designation

Output of model designation and unit of measure

N	D	-	2	3	1		B								M	M				<CR>	<LF>

13 characters	5 characters	2 characters
Model display unit, left-aligned	Unit of meas.	End of line

Line: Axis to be corrected

Output of axis to be corrected

A	X	I	S			X	1								=							0	<CR>	<LF>

13 characters	3 char.	6 characters	2 characters
Axis to be corrected left-aligned	Separator block	Axis value right-aligned	End of line

Line: Axis to be corrected

Output of axis to be corrected

X	1		F	C	T	.		X	1						=							0	<CR>	<LF>

13 characters	3 char.	6 characters	2 characters
Axis causing the error left-aligned	Separator block	Axis value right-aligned	End of line

Line: Spacing of compensation points

Output of distance between compensation points

S	P	A	C	I	N	G								=						1	4	<CR><LF>

13 characters	3 char.	6 characters	2 characters
Spacing, left-aligned	Separator block	Spacing right-aligned	End of line

Line: Datum point

Output of datum point for the compensation

D	A	T	U	M										=				+					0	.	0	0	0	0	<CR><LF>

13 characters	3 char.	13 characters	2 characters
Datum, left-aligned	Sep. block	Value for datum, right-aligned	End of line

Line: Compensation value 0

Output of compensation-value no. 0

C	M	P	.			N	R	.		0	0			=				+					0	.	0	0	0	0	<CR><LF>

13 characters	3 char.	13 characters	2 characters
Compensation-value no., left-aligned	Sep. block	Compensation-value, right-aligned	End of line

Output of compensation values 1 - 63

Output of compensation values

C	M	P	.			N	R	.		6	3			=				+					0	.	0	1	2	3	<CR><LF>

13 characters	3 char.	13 characters	2 characters
Compensation-value no., left-aligned	Sep. block	Compensation value, right-aligned	End of line

Last line:

Each compensation-value table ends with the final character <*> (HEX: 0x2A)

*	<CR>	<LF>

3 characters

Compensation-value table for ND 231 B (axis X2): Active compensation

Compensation-value table	**Description:**
*	Start character (*);
ND-231 B MM	Model of display unit; unit of measure (MM or IN);
AXIS X2 = 1	Axis to be corrected, X1 = 0; X2 = 1;
X2 FCT. X2 = 1	Axis causing the error, X1 = 0; X2 = 1;
SPACING X2 = 15	Spacing X2 = 15 (range : 6 – 20)
DATUM X2 = + 15.2250	Datum X2: +15.2250 mm (value input)
CMP. NR. 00 = + 0.0000	Compensation value 0 = 0.0000 mm (compensation value 0 is always 0)
CMP. NR. 01 = - 0.0300	Compensation values 1 – 10 are assigned values (value input)
CMP. NR. 02 = - 0.0420	The axis is compensated from 15.2250 mm to 342.9050 mm.
CMP. NR. 03 = - 0.0080	
CMP. NR. 04 = + 0.0000	
CMP. NR. 05 = + 0.0090	
CMP. NR. 06 = + 0.0180	
CMP. NR. 07 = + 0.0250	
CMP. NR. 08 = + 0.0420	
CMP. NR. 09 = + 0.0510	
CMP. NR. 10 = + 0.0620	
CMP. NR. 11 = ----------	Compensation values 11 – 63: no value entered (memory empty)
CMP. NR. 12 = ----------	
CMP. NR. 13 = ----------	
.	
.	
.	
.	
CMP. NR. 60 = ----------	
CMP. NR. 61 = ----------	
CMP. NR. 62 = ----------	
CMP. NR. 63 = ----------	
*	Final character (*);

Remote Operation over the RS-232-C/V.24 Interface

You can operate the display unit remotely over the RS-232-C/V.24 data interface. The following commands are available on the ND 231 B:

Format:

<ESC>TXXXX<CR>	Pressed key
<ESC>AXXXX<CR>	Output of screen contents
<ESC>FXXXX<CR>	Execute function
<ESC>SXXXX<CR>	Special function

Sequence of commands	Meaning
<ESC>T0000<CR>	‘0‘ key
<ESC>T0001<CR>	‘1‘ key
<ESC>T0002<CR>	‘2‘ key
<ESC>T0003<CR>	‘3‘ key
<ESC>T0004<CR>	‘4‘ key
<ESC>T0005<CR>	‘5‘ key
<ESC>T0006<CR>	‘6‘ key
<ESC>T0007<CR>	‘7‘ key
<ESC>T0008<CR>	‘8‘ key
<ESC>T0009<CR>	‘9‘ key
<ESC>T0100<CR>	‘CL‘ key
<ESC>T0101<CR>	‘-‘ key
<ESC>T0102<CR>	‘.‘ key
<ESC>T0104<CR>	‘ENT‘ key
<ESC>T0105<CR>	‘MOD‘ key
<ESC>T0107<CR>	‘1/2‘ (datum) key

Sequence of commands	Meaning
<ESC>T1000<CR>	‘CE+0‘ keys
<ESC>T1001<CR>	‘CE+1‘ keys
<ESC>T1002<CR>	‘CE+2‘ keys
<ESC>T1003<CR>	‘CE+3‘ keys
<ESC>T1004<CR>	‘CE+4‘ keys
<ESC>T1005<CR>	‘CE+5‘ keys
<ESC>T1006<CR>	‘CE+6‘ keys
<ESC>T1007<CR>	‘CE+7‘ keys
<ESC>T1008<CR>	‘CE+8‘ keys
<ESC>T1009<CR>	‘CE+9‘ keys
<ESC>A0000<CR>	Output of model designation
<ESC>A0100<CR>	Output of 14-segment display
<ESC>A0200<CR>	Output of current value
<ESC>A0301<CR>	Output of error text
<ESC>A0400<CR>	Output of software number
<ESC>A0900<CR>	Output of status indicators
<ESC>F0000<CR>	REF function
<ESC>F0002<CR>	Print
<ESC>S0000<CR>	Counter RESET
<ESC>S0001<CR>	Lock keypad
<ESC>S0002<CR>	Release keypad

Description of RS-232-C/V.24 commands:

The display unit supports the XON-XOFF protocol when executing commands. As soon as the internal character buffer (100 characters) is full, the display unit sends the control character XOFF to the sender. After the buffer has been executed, the display unit sends the control character XON to the sender and is then ready to receive data again.

Pressed key (TXXXX commands)

The display unit acknowledges each identified key command by sending the control character **ACK** (Acknowledge Control-F). Then the key command becomes effective.

The display unit responds to commands that cannot be identified or to invalid commands by sending the control character **NAK** (No acknowledge Control-U).

Output of model designation:

The model of display unit, software number, and the date of software release are transmitted.

Example:

<STX>		N	D	-	2	3	1		B		<CR>	<LF>
		3	4	9	7	9	7	-	0	4	<CR>	<LF>
	2	0	0	1	-	0	5	-	0	4	<CR>	<LF>

String: STX;
10 characters; CR; LF;
10 characters; CR; LF;
10 characters; CR; LF;

Output of 14-segment display:

The contents displayed are transmitted (also dialogs and error messages).

<STX>	-	1	2	3	4	5	.	6	7	8	9	<CR>	<LF>

String: STX;
Min. 10 to max. 13 characters; CR; LF;
(depending on the number of commas and decimal points)

Output of current value:

The current position value (without decimal point, with leading zeros) is transmitted.

<STX>	+	1	2	3	4	5	6	7	8	9	<CR>	<LF>

String: STX;
Algebraic sign; numerical value with
9 characters, CR; LF;

Output of error text:

The displayed error text is transmitted. (Functions only if an error message is displayed.)

<STX>	F	O	R	M	A	T	.	E	R	R	.			<CR>	<LF>

String: STX;
13 characters; CR; LF;

Output of software number:

The current software number is transmitted.

<STX>		3	4	9	7	9	7	-	0	4	<CR>	<LF>

String: STX;
10 characters; CR; LF;

Output of status indicators:

The condition of the status display is transmitted.
Example:
0 = Status indicator dark
1 = Status indicator glows
2 = Status indicator blinks

<STX>	0	1	0	0	1	0	0	1	0	0	0	0	0	0	<CR>	<LF>
	a	b	c	d	e	f	g	h	i	j						

String: STX;
14 characters; CR; LF;

a = REF (reference point)
b = datum 1
c = datum 2
d = SET (set datum)
e = START (measurement series)
f = PRINT (data output)
g = inch (inch display)
h = < (sorting mode)
i = = (sorting mode)
j = > (sorting mode)

Execute functions (FXXX commands):

The display unit acknowledges every correctly received command by transmitting the control character **ACK** (Acknowledge, Control F). Then it executes the command. It answers unrecognized or invalid commands by sending the control character **NAK** (No acknowledge Control U).

REF function:

Activates or deactivates the REF mode (current REF condition is changed).

Print

Output of the current measured value. The measured value (string) is transmitted as described in the manual (page 38). Same function as calling the measured value with STX (Control B).

Special functions (SXXX commands):

Counter RESET:

The software resets the counter and the counter restarts. (Function same as switching the display unit off and on.)

Locking the keypad:

The display unit acknowledges the special function by sending the control character **ACK** (acknowledge)**.** All keys of the display unit are locked. The counter can be operated only by external RS-232-C/V.24 commands. The keyboard can be unlocked either by sending the special function "Unlock keyboard" or by switching the display unit off and on.

Unlocking the keypad:

The display unit acknowledges the special function by sending the control character **ACK** (acknowledge)**.** This unlocks a keyboard that has been locked with the special function "Lock keyboard."

Specifications

Housing	**ND 231 B** Benchtop design, cast-metal housing (W · H · D) 239 mm · 84.6 mm · 224 mm
Operating temperature	0° to 45° C (32° to 113° F)
Storage temperature	–20 °C to 70 °C (–4 °F to 158 °F)
Weight	Approx. 1.5 kg (3.3 lb)
Relative humidity	< 75% annual average < 90% in rare cases
Power supply	Primary-clocked power supply 100 Vac to 240 Vac (–15% to +10%) 50 Hz to 60 Hz (± 2 Hz)
Line fuse	F 1 A inside the housing
Power consumption	8 W (typically)
Electromagnetic compatibility	Class B according to EN 55022

Noise immunity	As per VDE 0843 Parts 2 and 4, severity 4
Protection	IP40 according to IEC 529
Encoder inputs	For encoders with sinusoidal output signals (11 μA_{PP}); Reference mark evaluation for distance-coded and single reference marks
Input frequency	X1 and X2: Max. 100 kHz for 30 m cable length
Display step	Adjustable
Datum points	Two
Functions	• Sorting and tolerance checking • Switching and sorting signals • Set display and reset display to zero with external signal • Measured value output
RS-232-C/V.24 interface	Baud rates: 110, 150, 300, 600, 1200, 2400, 4800, 9600, 19 200, 38 400 baud

ND 231 B: Dimensions in mm/inches

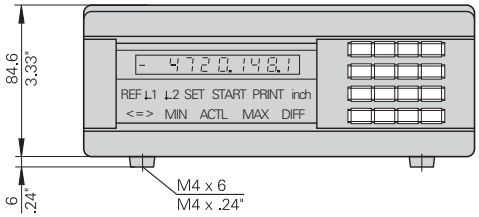

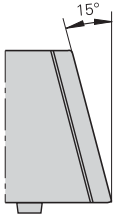

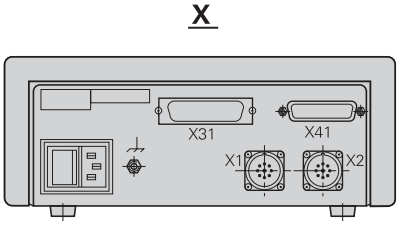

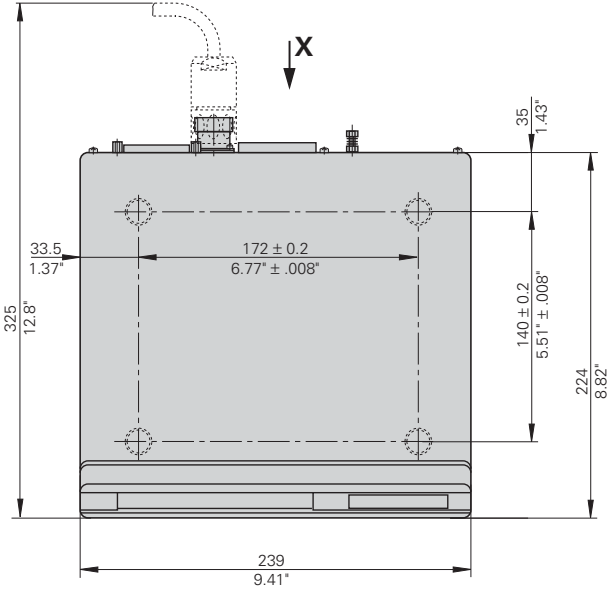

HEIDENHAIN

DR. JOHANNES HEIDENHAIN GmbH
Dr.-Johannes-Heidenhain-Straße 5
83301 Traunreut, Germany
☏ +49/86 69/31-0
FAX +49/86 69/50 61
e-mail: info@heidenhain.de

☏ **Service** +49/86 69/31-12 72
☏ TNC-Service +49/86 69/31-14 46
FAX +49/86 69/98 99
e-mail: service@heidenhain.de

www.heidenhain.de

HEIDENHAIN (G.B.) Limited
200 London Road, Burgess Hill
West Sussex RH15 9RD, Great Britain
☏ (01444) 24 77 11
FAX (01444) 87 00 24

350 274-22 · SW 349 797-04 · 3 · 12/2001 · E · Printed in Germany · Subject to change without notice