HEIDENHAIN

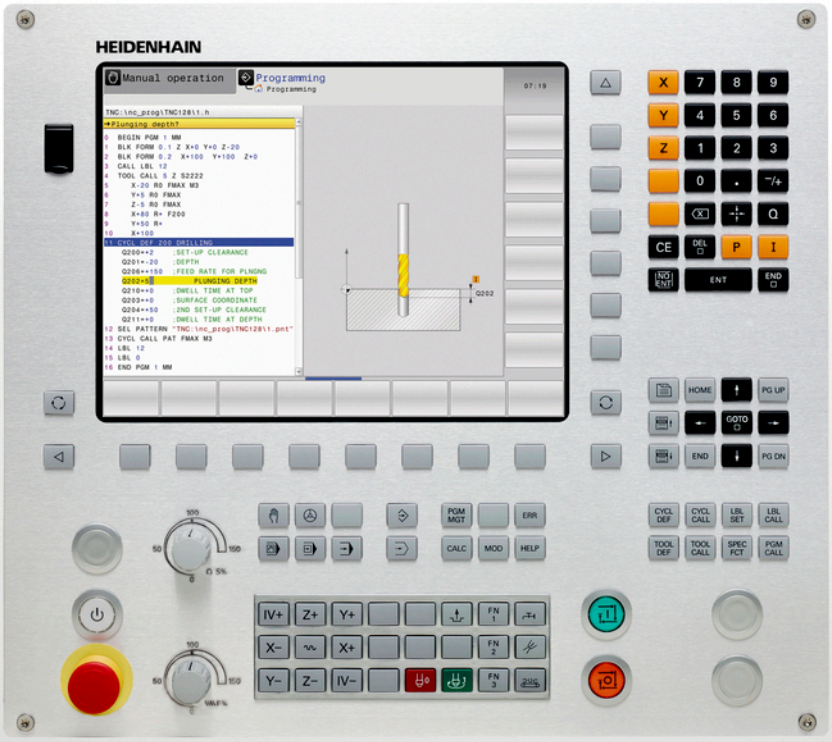

TNC 128

User's Manual
HEIDENHAIN
Conversational Programming

NC Software
771841-03

English (en)
2/2015

Controls of the TNC

Keys on visual display unit

Key	Function
	Select split screen layout
	Toggle the display between machining and programming modes
	Soft keys for selecting functions on screen
◁ ▷ △	Shifting between soft-key rows

Machine operating modes

Key	Function
	Manual operation
	Electronic handwheel
	Positioning with manual data input
	Program run, single block
	Program run, full sequence

Programming modes

Key	Function
	Programming
	Test run

Program/file management, TNC functions

Key	Function
PGM MGT	Select or delete programs and files, external data transfer
PGM CALL	Define program call, select datum and point tables
MOD	Select MOD functions
HELP	Display help text for NC error messages, call TNCguide
ERR	Display all current error messages
CALC	Show calculator

Navigation keys

Key	Function
↑ ←	Move highlight
GOTO	Go directly to blocks, cycles and parameter functions

Potentiometer for feed rate and spindle speed

Feed rate	Spindle speed

Cycles, subprograms and program section repeats

Key		Function
CYCL DEF	CYCL CALL	Define and call cycles
LBL SET	LBL CALL	Enter and call labels for subprogramming and program section repeats

Tool functions

Key	Function
TOOL DEF	Define tool data in the program
TOOL CALL	Call tool data

Special functions

Key	Function
SPEC FCT	Show special functions
	Select the next tab in forms
	Up/down one dialog box or button

Entering and editing coordinate axes and numbers

Key		Function
X . . .	V	Select coordinate axes or enter them in a program
0 . . .	9	Numbers
.	−/+	Decimal point / Reverse algebraic sign
P	I	Polar coordinate input / Incremental values
Q		Q-parameter programming/ Q-parameter status
		Save actual position or values from calculator
NO ENT		Skip dialog questions, delete words
ENT		Confirm entry and resume dialog
END		Conclude block and exit entry
CE		Clear numerical entry or TNC error message
DEL		Abort dialog, delete program section

Fundamentals

About this manual

The symbols used in this manual are described below.

⇨	This symbol indicates that important information about the function described must be considered.
!	This symbol indicates that there is one or more of the following risks when using the described function: ■ Danger to workpiece ■ Danger to fixtures ■ Danger to tool ■ Danger to machine ■ Danger to operator
⚠	This symbol indicates a possibly dangerous situation that may cause injuries if not avoided.
	This symbol indicates that the described function must be adapted by the machine tool builder. The function described may therefore vary depending on the machine.
	This symbol indicates that you can find detailed information about a function in another manual.

Would you like any changes, or have you found any errors?

We are continuously striving to improve our documentation for you. Please help us by sending your requests to the following e-mail address: **tnc-userdoc@heidenhain.de**.

TNC model, software and features

This manual describes functions and features provided by TNCs as of the following NC software numbers.

TNC model	NC software number
TNC 128	771841-03

The machine tool builder adapts the usable features of the TNC to his machine by setting machine parameters. Some of the functions described in this manual may therefore not be among the features provided by the TNC on your machine tool.

TNC functions that may not be available on your machine include:

- Probing functions for the 3-D touch probe

Please contact your machine tool builder to become familiar with the features of your machine.

Many machine manufacturers, as well as HEIDENHAIN, offer programming courses for the TNCs. We recommend these courses as an effective way of improving your programming skill and sharing information and ideas with other TNC users.

Software options

The TNC 128 features various software options that can be enabled by your machine tool builder. Each option is to be enabled separately and contains the following respective functions:

Touch Probe Functions (option 17)	
Touch probe cycles	■ Datum setting in the **Manual Operation** mode ■ Automatic tool measurement
HEIDENHAIN DNC (option 18)	
	■ Communication with external PC applications over COM component

Feature Content Level (upgrade functions)

Along with software options, significant further improvements of the TNC software are managed via the **F**eature **C**ontent **L**evel upgrade functions. Functions subject to the FCL are not available simply by updating the software on your TNC.

> All upgrade functions are available to you without surcharge when you receive a new machine.

Upgrade functions are identified in the manual with **FCL n,** where **n** indicates the sequential number of the feature content level.

You can purchase a code number in order to permanently enable the FCL functions. For more information, contact your machine tool builder or HEIDENHAIN.

Intended place of operation

The TNC complies with the limits for a Class A device in accordance with the specifications in EN 55022, and is intended for use primarily in industrially-zoned areas.

Legal information

This product uses open source software. Further information is available on the control under

- Programming and Editing operating mode
- MOD function
- **LICENSE INFO** soft key

Contents

1

First steps with the TNC 128

1.1 Overview

This chapter is intended to help TNC beginners quickly learn to handle the most important procedures. For more information on a respective topic, see the section referred to in the text.

The following topics are included in this chapter:

- Machine switch-on
- Programming the first part
- Graphically testing the first part
- Setting up tools
- Workpiece setup
- Running the first program

1.2 Machine switch-on

Acknowledging the power interruption and moving to the reference points

Switch-on and crossing over the reference points can vary depending on the machine tool. Refer to your machine manual.

- Switch on the power supply for control and machine. The TNC starts the operating system. This process may take several minutes. Then the TNC will display the "Power interrupted" message in the screen header.

CE

- Press the CE key: The TNC compiles the PLC program

I

- Switch on the control voltage: The TNC checks operation of the emergency stop circuit and goes into the reference run mode

- Cross the reference points manually in the displayed sequence: For each axis press the machine **START** button. If you have absolute linear and angle encoders on your machine there is no need for a reference run

The TNC is now ready for operation in the **Manual Operation** mode.

Further information on this topic

- Traversing the reference marks: see "Switch-on", page 296
- Operating modes: see "Programming", page 67

1.3 Programming the first part

Selecting the correct operating mode

You can write programs only in Programming mode:

- Press the Programming operating mode key: The TNC switches to **Programming mode**

Further information on this topic

- Operating modes: see "Programming", page 67

The most important TNC keys

Key	Functions for conversational guidance
ENT	Confirm entry and activate the next dialog prompt
NO ENT	Ignore the dialog question
END	End the dialog immediately
DEL	Abort dialog, discard entries
	Soft keys on the screen with which you select functions appropriate to the active operating state

Further information on this topic

- Writing and editing programs: see "Editing a program", page 93
- Overview of keys: see "Controls of the TNC", page 2

Opening a new program/file management

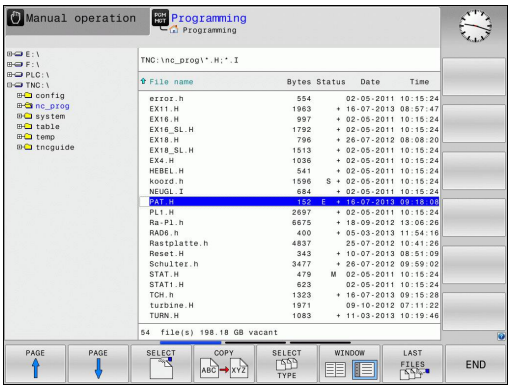

PGM MGT

- Press the **PGM MGT** key: The TNC opens the file manager The file management of the TNC is arranged much like the file management on a PC with the Windows Explorer. The file management enables you to manage data on the internal memory of the TNC
- Use the arrow keys to select the folder in which you want to open the new file

GOTO

- Press the **GOTO** key: The TNC opens a keyboard in the pop-up window
- Enter any desired file name with the extension **.H**

ENT

- Confirm with the **ENT** key: The control asks you for the unit of measurement for the new program

MM

- Select the unit of measure: Press the MM or INCH soft key

The TNC automatically generates the first and last blocks of the program. Afterwards you can no longer change these blocks.

Further information on this topic

- File Management: see "Working with the file manager", page 101
- Creating a new program: see "Opening programs and entering", page 86

Defining a workpiece blank

After you have created a new program you can define a workpiece blank. For example, define a cuboid by entering the MIN and MAX points, each with reference to the selected reference point.

After you have selected the desired blank form via soft key, the TNC automatically initiates the workpiece blank definition and asks for the required data:

- **Working plane in graphic: XY?**: Enter the active spindle axis. Z is saved as default setting. Accept with the **ENT** key
- **Workpiece blank def.: Minimum X**: Enter the smallest X coordinate of the workpiece blank with respect to the reference point, e.g. 0, confirm with the **ENT** key
- **Workpiece blank def.: Minimum Y**: Smallest Y coordinate of the workpiece blank with respect to the reference point, e.g. 0. Confirm with the **ENT** key
- **Workpiece blank def.: Minimum Z**: Smallest Z coordinate of the workpiece blank with respect to the reference point, e.g. -40, confirm with the **ENT** key
- **Workpiece blank def.: Maximum X**: Enter the largest X coordinate of the workpiece blank with respect to the reference point, e.g. 100, confirm with the **ENT** key
- **Workpiece blank def.: Maximum Y**: Enter the largest Y coordinate of the workpiece blank with respect to the reference point, e.g. 100. Confirm with the **ENT** key
- **Workpiece blank def.: Maximum Z**: Enter the largest Z coordinate of the workpiece blank with respect to the reference point, e.g. 0. Confirm with the **ENT** key. The TNC concludes the dialog

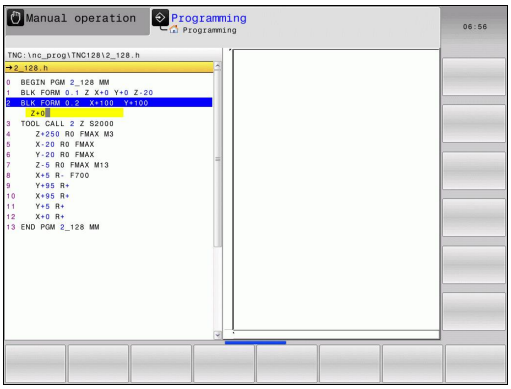

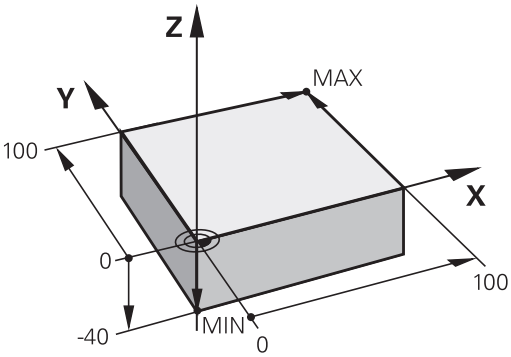

Example NC blocks

```
0 BEGIN PGM NEW MM
1 BLK FORM 0.1 Z X+0 Y+0 Z-40
2 BLK FORM 0.2 X+100 Y+100 Z+0
3 END PGM NEW MM
```

Further information on this topic

- Defining the workpiece blank: page 88

Program layout

NC programs should be arranged consistently in a similar manner. This makes it easier to find your place, accelerates programming and reduces errors.

Recommended program layout for simple, conventional contour machining

1 Call tool, define tool axis
2 Retract the tool
3 Pre-position the tool in the working plane near the contour starting point
4 In the tool axis, position the tool above the workpiece, or preposition immediately to workpiece depth. If required, switch on the spindle/coolant
5 Contour approach
6 Contour machining
7 Contour departure
8 Retract the tool, end program

Further information on this topic

- Contour programming: see "Tool movements in the program", page 176

Layout of contour machining programs

```
0 BEGIN PGM BSPCONT MM
1 BLK FORM 0.1 Z X... Y... Z...
2 BLK FORM 0.2 X... Y... Z...
3 TOOL CALL 5 Z S5000
4 Z+250 R0 FMAX
5 X... R0 FMAX
6 Z+10 R0 F3000 M13
7 X... RL F500
...
16 X... R0 FMAX
17 Z+250 R0 FMAX M2
18 END PGM BSPCONT MM
```

Recommended program layout for simple cycle programs

1 Call tool, define tool axis
2 Retract the tool
3 Define the machining positions
4 Define the fixed cycle
5 Call the cycle, switch on the spindle/coolant
6 Retract the tool, end program

Further information on this topic

- Cycle programming: see "Fundamentals / Overviews", page 391

Cycle program layout

```
0 BEGIN PGM BSBCYC MM
1 BLK FORM 0.1 Z X... Y... Z...
2 BLK FORM 0.2 X... Y... Z...
3 TOOL CALL 5 Z S5000
4 Z+250 R0 FMAX
5 PATTERN DEF POS1( X... Y...
    Z... ) ...
6 CYCL DEF...
7 CYCL CALL PAT FMAX M13
8 Z+250 R0 FMAX M2
9 END PGM BSBCYC MM
```

Programming a simple contour

The contour shown to the right is to be milled once to a depth of 5 mm. You have already defined the workpiece blank. After you have initiated a dialog through a function key, enter all the data requested by the TNC in the screen header.

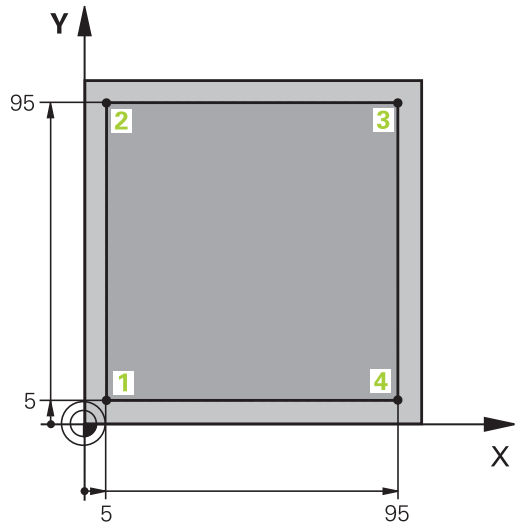

TOOL CALL
- Call the tool: Enter the tool data. Confirm each of your entries with the **ENT** key. Do not forget the tool axis

Z
- Retract tool: Press the orange axis key and enter the value for the position to be approached, e.g. 250. Press the **ENT** key
- Confirm **Radius comp.: R+/R-/no comp?** by pressing the **ENT** key: Do not activate the radius compensation
- Confirm **Feed rate F=?** with the **ENT** key: Move at rapid traverse (**FMAX**)
- Confirm the **Miscellaneous function M?** with the **END** key: The TNC saves the entered positioning block

X
- Preposition the tool in the working plane: Press the orange axis key X and enter the value for the position to be approached, e.g. –20
- Confirm **Radius comp.: R+/R-/no comp?** by pressing the **ENT** key: Do not activate the radius compensation
- Confirm **Feed rate F=?** with the **ENT** key: Move at rapid traverse (**FMAX**)
- Confirm the **Miscellaneous function M?** with the **END** key: The TNC saves the entered positioning block

Y
- Press the orange axis key Y and enter the value for the position to be approached, e.g. –20. Confirm your entry with the ENT key.
- Confirm **Radius comp.: R+/R-/no comp?** by pressing the **ENT** key: Do not activate the radius compensation
- Confirm **Feed rate F=?** with the **ENT** key: Move at rapid traverse (**FMAX**)
- Confirm the **Miscellaneous function M?** with the**END** key: The TNC saves the entered positioning block

Z
- Move tool to working depth: Press the orange axis key Z and enter the value for the position to be approached, e.g. –5. Confirm your entry with the ENT key.
- Confirm **Radius comp.: R+/R-/no comp?** by pressing the **ENT** key: Do not activate the radius compensation
- **Feed rate F=?** Enter the positioning feed rate, e.g. 3000 mm/min, confirm with the ENT key
- **Miscellaneous function M?** Switch on the spindle and coolant, e.g. **M13**. Confirm with the END key: The TNC saves the entered positioning block

X
- Approach contour point 1: Press the orange X axis key and enter the value 5 for the position to be approached
- **Tool radius comp: R+/R-/no comp?** Select the R– soft key: The traverse path is decreased by the tool radius
- **Feed rate F=?** Enter the machining feed rate, e.g. 700 mm/min, save your entry with the END key

Y
- Approach contour point 2: Press the orange Y axis key and enter the value 95 for the position to be approached
- **Tool radius comp: R+/R-/no comp?** Select the R+ soft key: The traverse path is increased by the tool radius. Confirm your entry with the END key

X
- Approach contour point 3: Press the orange X axis key and enter the value 95 for the position to be approached
- **Tool radius comp: R+/R-/no comp?** Select the R+ soft key: The traverse path is increased by the tool radius. Confirm your entry with the END key

Y
- Approach contour point 4: Press the orange Y axis key and enter the value 5 for the position to be approached
- **Tool radius comp: R+/R-/no comp?** Select the R+ soft key: The traverse path is increased by the tool radius. Confirm your entry with the END key

X
- Approach contour point 1 and retract the tool: Press the orange X axis key and enter the value 0 for the position to be approached
- **Tool radius comp: R+/R-/no comp?** Select the R+ soft key: The traverse path is increased by the tool radius. Confirm your entry with the END key

Z
- Retract tool: Press the orange axis key Z to retract in the tool axis, and enter the value for the position to be approached, e.g. 250. Confirm your entry with the ENT key.
- Confirm **Radius comp.: R+/R-/no comp?** by pressing the ENT key: Do not activate the radius compensation
- Confirm **Feed rate F=?** with the ENT key: Move at rapid traverse (**FMAX**)
- **Miscellaneous function M?** Enter **M2** to end the program and confirm with the END key: The TNC saves the entered positioning block

Further information on this topic

- Creating a new program: see "Opening programs and entering", page 86
- Programmable feed rates: see "Possible feed rate input", page 91
- Tool radius compensation: see "Tool radius compensation with paraxial positioning blocks", page 172
- Miscellaneous functions M: see "M functions for program run inspection, spindle and coolant ", page 267

Creating a cycle program

The holes (depth of 20 mm) shown in the figure at right are to be drilled with a standard drilling cycle. You have already defined the workpiece blank.

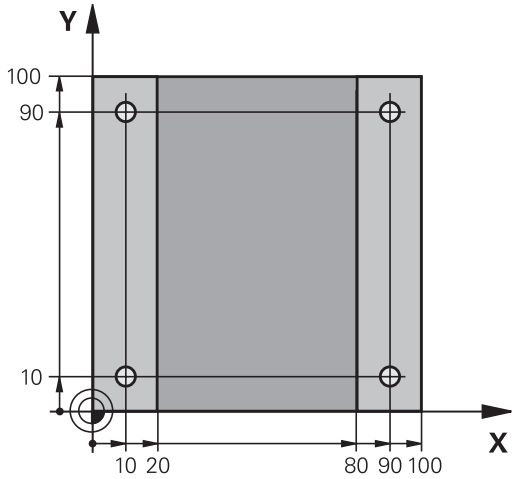

TOOL CALL
- Call the tool: Enter the tool data. Confirm each of your entries with the **ENT** key. Do not forget the tool axis

Z
- Retract tool: Press the orange axis key **Z** and enter the value for the position to be approached, e.g. 250. Press the **ENT** key
- Confirm **Radius comp.: R+/R-/no comp.?** by pressing the ENT key: Do not activate radius compensation
- Confirm **Feed rate F=?** with the **ENT** key: Move at rapid traverse (**FMAX**)
- **Miscellaneous function M?**. Confirm with the **END** key: The TNC saves the entered positioning block

CYCL DEF
- Call the cycle menu

DRILLING/ THREAD
- Display the drilling cycles

200
- Select the standard drilling cycle 200: The TNC starts the dialog for cycle definition. Enter all parameters requested by the TNC step by step and conclude each entry with the **ENT** key. In the screen to the right, the TNC also displays a graphic showing the respective cycle parameter

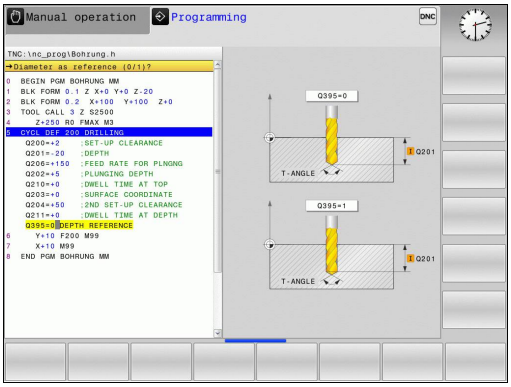

SPEC FCT
- Call the menu for special functions

CONTOUR + POINT MACHINING
- Display the functions for point machining

PATTERN DEF
- Select the pattern definition

POINT
- Select point entry: Enter the coordinates of the 4 points and confirm each with the **ENT** key. After entering the fourth point, save the block with the **END** key

CYCL CALL
- Display the menu for defining the cycle call

CYCLE CALL PAT
- Run the drilling cycle on the defined pattern:
- Confirm **Feed rate F=?** with the **ENT** key: Move at rapid traverse (**FMAX**)
- **Miscellaneous function M?** Switch on the spindle and coolant, e.g. **M13**. Confirm with the **END** key: The TNC saves the entered positioning block

Z

- Enter Retract tool: Press the orange axis key **Z** and enter the value for the position to be approached, e.g. 250. Press the **ENT** key
- Confirm **Radius comp.: R+/R-/no comp.?** by pressing the **ENT** key: Do not activate radius compensation
- Confirm **Feed rate F=?** with the **ENT** key: Move at rapid traverse (**FMAX**)
- **Miscellaneous function M?** Enter **M2** to end the program and confirm with the **END** key: The TNC saves the entered positioning block

Example NC blocks

0 BEGIN PGM C200 MM	
1 BLK FORM 0.1 Z X+0 Y+0 Z-40	Definition of workpiece blank
2 BLK FORM 0.2 X+100 Y+100 Z+0	
3 TOOL CALL 5 Z S4500	Tool call
4 Z+250 R0 FMAX	Retract the tool
5 PATTERN DEF POS1 (X+10 Y+10 Z+0) POS2 (X+10 Y+90 Z+0) POS3 (X+90 Y+90 Z+0) POS4 (X+90 Y+10 Z+0)	Define the machining positions
6 CYCL DEF 200	Define the cycle
Q200=2 ;SET-UP CLEARANCE	
Q201=-20 ;DEPTH	
Q206=250 ;FEED RATE FOR PLNGNG	
Q202=5 ;	
Q210=0 ;DWELL TIME AT TOP	
Q203=-10 ;SURFACE COORDINATE	
Q204=20 ;2ND SET-UP CLEARANCE	
Q211=0.2 ;DWELL TIME AT DEPTH	
Q395=0 ;	
7 CYCL CALL PAT FMAX M13	Spindle and coolant on, call the cycle
8 Z+250 R0 FMAX M2	Retract the tool, end program
9 END PGM C200 MM	

Further information on this topic

- Creating a new program: see "Opening programs and entering", page 86
- Cycle programming: see "Fundamentals / Overviews", page 391

1.4 Graphically testing the first part

Selecting the correct operating mode

You can test programs in the **Test Run** mode:

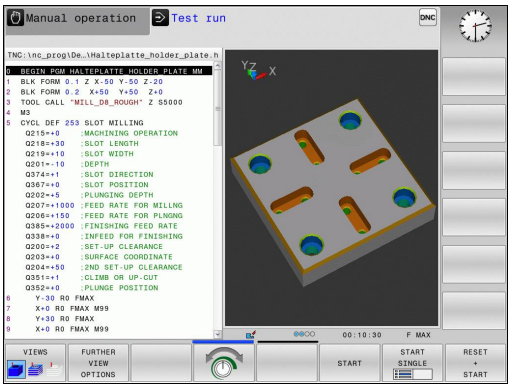

- Press the **Test Run** operating mode key: the TNC switches to that mode

Further information on this topic

- Operating modes of the TNC: see "Modes of operation", page 67
- Testing programs: see "Test run", page 345

Selecting the tool table for the test run

You only need to execute this step if you have not activated a tool table in the **Test Run** mode.

- Press the **PGM MGT** key: The TNC opens the file manager

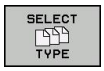

- Press the **SELECT TYPE** soft key: The TNC shows a soft-key menu for selection of the file type to be displayed

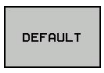

- Press the **DEFAULT** soft key: The TNC shows all saved files in the right window

- Move the highlight to the left onto the directories

- Move the highlight to the **TNC:\table** directory

- Move the highlight to the right onto the files

- Move the highlight to the file TOOL.T (active tool table) and load with the ENT key: TOOL.T receives the status **S** and is therefore active for the test run

- Press the **END** key: Exit the file manager

Further information on this topic

- Tool management: see "Enter tool data into the table", page 156
- Testing programs: see "Test run", page 345

Choosing the program you want to test

- Press the **PGM MGT** key: The TNC opens the file manager

- Press the **LAST FILES** soft key: The TNC opens a pop-up window with the most recently selected files
- Use the arrow keys to select the program that you want to test. Load with the **ENT** key

Further information on this topic

- Selecting a program: see "Working with the file manager", page 101

Selecting the screen layout and the view

- Press the key for selecting the screen layout. The TNC shows all available alternatives in the soft-key row

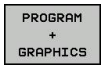

- Press the **PROGRAM + GRAPHICS** soft key: In the left half of the screen the TNC shows the program; in the right half it shows the workpiece blank

- Press the **FURTHER VIEW OPTIONS** soft key

- Shift the soft-key row and select the desired view by soft key

The TNC features the following views:

Soft keys	Function
	Volume view
	Volume view and tool paths
	Tool paths

Further information on this topic

- Graphic functions: see page 334
- Running a test run: see "Test run", page 345

Starting the test run

- Press the **RESET + START** soft key: The TNC simulates the active program up to a programmed break or to the program end
- While the simulation is running, you can use the soft keys to change views

- Press the **STOP** soft key: The TNC interrupts the test run

- Press the **START** soft key: The TNC resumes the test run after a break

Further information on this topic

- Running a test run: see "Test run", page 345
- Graphic functions: see "Graphics ", page 334
- Adjust the simulation speed: see "Speed of the setting test runs", page 335

1.5 Setting up tools

Selecting the correct operating mode

Tools are set up in the **Manual Operation** mode:

- Press the operating-mode key: The TNC switches to the **Manual** mode of operation

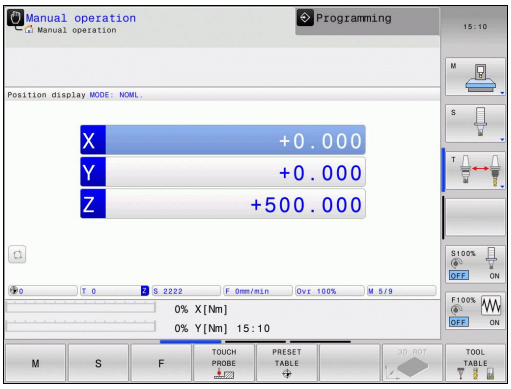

Further information on this topic

- Operating modes of the TNC: see "Modes of operation", page 67

Preparing and measuring tools

- Clamp the required tools in their tool holders
- When measuring with an external tool presetter: Measure the tools, note down the length and radius, or transfer them directly to the machine through a transfer program
- When measuring on the machine: Insert the tool

The tool table TOOL.T

In the tool table TOOL.T (permanently saved under **TNC:\table**), save the tool data such as length and radius, but also further tool-specific information that the TNC needs to perform its functions.

To enter tool data in the tool table TOOL.T, proceed as follows:

- Display the tool table: The TNC shows the tool table

- Edit the tool table: Set the **EDITING** soft key to ON
- With the upward or downward arrow keys you can select the tool number that you want to edit
- With the rightward or leftward arrow keys you can select the tool data that you want to edit
- To exit the tool table, press the **END** key

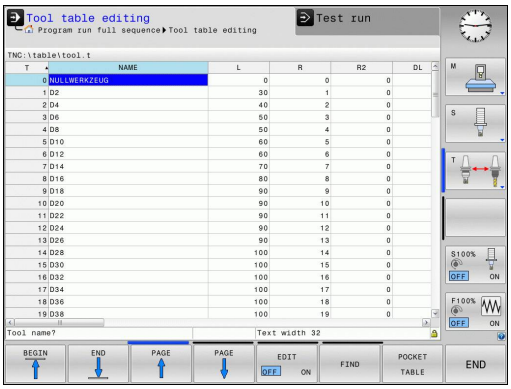

Further information on this topic

- Operating modes of the TNC: see "Modes of operation", page 67
- Working with the tool table: see "Enter tool data into the table", page 156

The pocket table TOOL_P.TCH

The function of the pocket table depends on the machine. Refer to your machine manual.

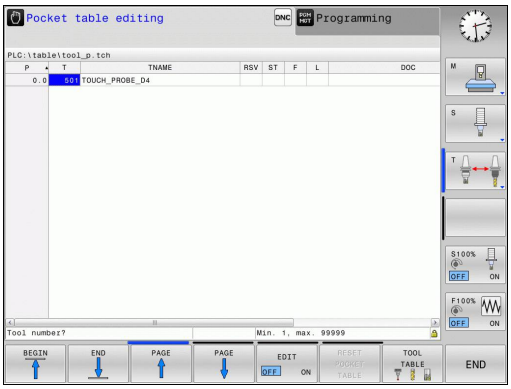

In the pocket table TOOL_P.TCH (permanently saved under **TNC:\table**) you specify which tools your tool magazine contains.

To enter data in the pocket table TOOL_P.TCH, proceed as follows:

- Display the tool table: The TNC shows the tool table

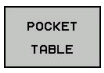

- Display the pocket table: The TNC shows the pocket table
- Edit the pocket table: Set the **EDIT** soft key to ON
- With the upward or downward arrow keys you can select the pocket number that you want to edit
- With the rightward or leftward arrow keys you can select the data that you want to edit
- Exit the pocket table: press the **END** key.

Further information on this topic

- Operating modes of the TNC: see "Modes of operation", page 67
- Working with the pocket table: see "Pocket table for tool changer", page 164

1.6 Workpiece setup

Selecting the correct operating mode

Workpieces are set up in the or mode

- Press the operating-mode key: The TNC switches to the **Manual** mode of operation

Further information on this topic

- Operating mode : see "Moving the machine axes", page 298

Clamping the workpiece

Mount the workpiece with a fixture on the machine table so that it is fixed with its edges parallel to the machine axes.

Further information on this topic

- Setting datums with 3-D touch probe: see "Datum setting with 3-D touch probe (option 17)", page 323
- Setting datums without 3-D touch probe: see "Datum setting without a 3-D touch probe", page 309

Setting datums with 3-D touch probe (option 17)

- Insert a 3-D touch probe: In the **Positioning with Manual Data Input** mode, run a **TOOL CALL** block containing the tool axis and then return to the **Manual Operation** mode

- Select the probing functions: The TNC displays the available functions in the soft-key row

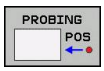

- Select the function for setting the datum, e.g. **PROBE POSITION**
- Position the touch probe near the first touch point on the first workpiece edge
- Select the probing direction via soft key
- Press NC start: The touch probe moves in the defined direction until it contacts the workpiece and then automatically returns to its starting point

Then the TNC displays the coordinates of the measured position

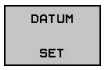

- To set to 0: Press the **SET DATUM** soft key
- Press the **END** soft key to close the menu

- Repeat this procedure for all axes, in which you want to set the datum

Further information on this topic

- Datum setting: see "Datum setting with 3-D touch probe (option 17)", page 323

1.7 Running the first program

Selecting the correct operating mode

You can run programs either in the **Single Block** or the **Full Sequence** mode:

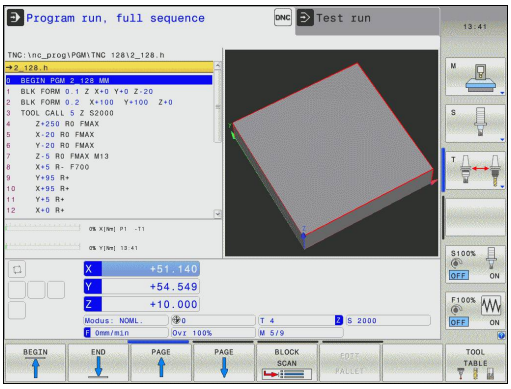

- Press the operating mode key: The TNC goes into the **Program Run, Single Block** mode and the TNC executes the program block by block. You have to confirm each block with the NC start key

- Press the **Program Run, Full Sequence** operating mode key: The TNC switches to that mode and runs the program after NC start up to a program interruption or to the end of the program

Further information on this topic

- Operating modes of the TNC: see "Modes of operation", page 67
- Running programs: see "Program run", page 348

Choosing the program you want to run

- Press the **PGM MGT** key: The TNC opens the file manager

- Press the **LAST FILES** soft key: The TNC opens a pop-up window with the most recently selected files
- If desired, use the arrow keys to select the program that you want to run. Load with the **ENT** key

Further information on this topic

- File Management: see "Working with the file manager", page 101

Start the program

- Press the NC start key: The TNC runs the active program

Further information on this topic

- Running programs: see "Program run", page 348

2

Introduction

2.1 The TNC 128

The TNC 128 is a workshop-oriented straight-cut control that enables you to program conventional machining operations right at the machine in an easy-to-use conversational programming language. It is designed for milling, drilling and boring machines with up to 3 axes. You can also change the angular position of the spindle under program control.

Keyboard and screen layout are clearly arranged in such a way that the functions are fast and easy to use.

Programming: In HEIDENHAIN conversational

The HEIDENHAIN conversational programming format is an especially easy method of writing programs. Interactive graphics illustrate the individual machining steps for programming the contour. Workpiece machining can be graphically simulated either during or before actual machining.

You can also enter and test one program while the control is running another.

Compatibility

Machining programs created on the HEIDENHAIN TNC 124 straight cut control may not always run on the TNC 128. If NC blocks contain invalid elements, the TNC will mark them as ERROR blocks or with error messages when the file is opened.

2.2 Visual display unit and operating panel

Display screen

The TNC is shipped with a 12.1-inch TFT flat-panel display.

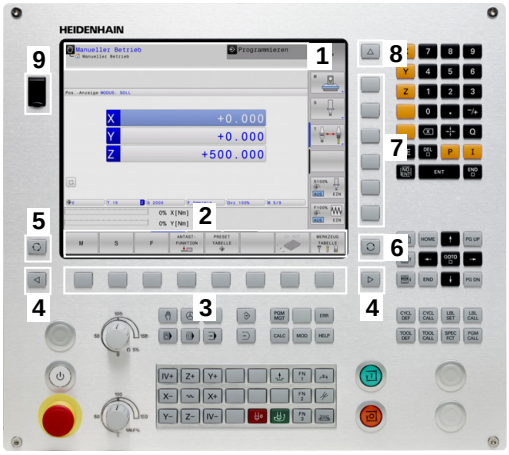

1 Header

When the TNC is on, the selected operating modes are shown in the screen header: the machining mode at the left and the programming mode at right. The currently active operating mode is displayed in the larger box, where the dialog prompts and TNC messages also appear.

2 Soft keys

In the footer the TNC indicates additional functions in a soft-key row. You can select these functions by pressing the keys immediately below them. The thin bars immediately above the soft-key row indicate the number of soft-key rows that can be called with the keys to the right and left that are used to switch the soft keys. The bar representing the active soft-key row is highlighted

3 Soft-key selection keys

4 Keys for switching the soft keys

5 Setting the screen layout

6 Shift key for switchover between machining and programming modes

7 Soft-key selection keys for machine tool builders

8 Keys for switching the soft keys for machine tool builders

9 USB connection

Setting the screen layout

You select the screen layout yourself: In the **Programming** mode of operation, for example, you can have the TNC show program blocks in the left window while the right window displays programming graphics. You could also display the program structure in the right window instead, or display only program blocks in one large window. The available screen windows depend on the selected operating mode.

To change the screen layout:

- Press the screen layout key: The soft-key row shows the available layout options, see "Modes of operation"

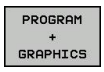

- Select the desired screen layout

Control panel

The TNC 128 is delivered with an integrated keyboard.

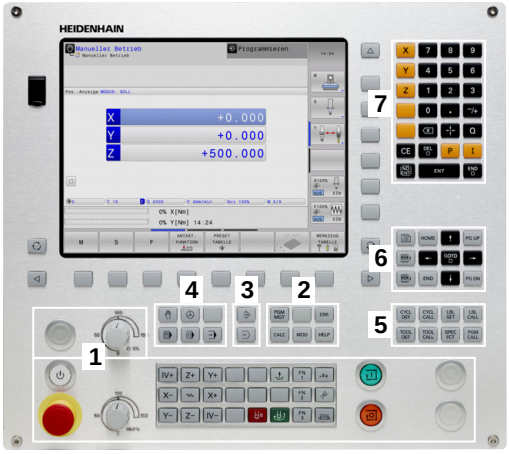

1 Machine operating panel (refer to your machine manual)
2
- File management
- Calculator
- MOD function
- HELP function

3 Programming modes
4 Machine operating modes
5 Initiating programming dialogs
6 Navigation keys and **GOTO** jump command
7 Numerical input, axis selection and programming of positioning blocks

The functions of the individual keys are described on the inside front cover.

> Some machine manufacturers do not use the standard operating panel from HEIDENHAIN. Refer to your machine manual.
>
> External buttons, e.g. NC START or NC STOP, are described in the manual for your machine tool.

2.3 Modes of operation

Manual Operation and El. Handwheel

The **Manual Operation** mode is required for setting up the machine tool. In this mode of operation, you can position the machine axes manually or by increments and set the datums.

The **El. Handwheel** mode of operation allows you to move the machine axes manually with the HR electronic handwheel.

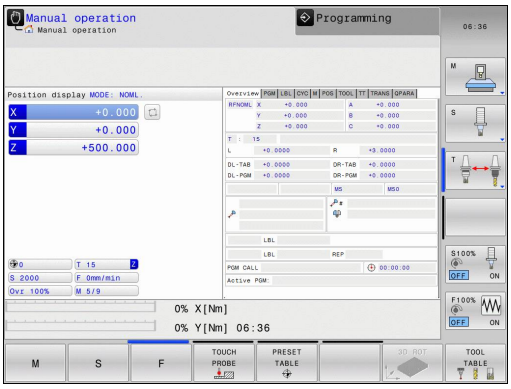

Soft keys for selecting the screen layout (select as described previously)

Soft key	Window
POSITION	Positions
POSITION + STATUS	Left: positions, right: status display

Positioning with Manual Data Input

This mode of operation is used for programming simple traversing movements, such as for face milling or prepositioning.

Soft keys for selecting the screen layout

Soft key	Window
PGM	Program
PROGRAM + STATUS	Left: program, right: status display

Programming

In this mode of operation you can write your part programs. the various cycles and the Q parameter functions help you with programming and add necessary information. If desired, you can have the programming graphics show the programmed paths of traverse.

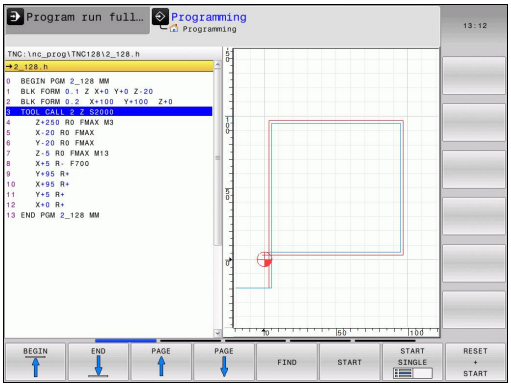

Soft keys for selecting the screen layout

Soft key	Window
PGM	Program
PROGRAM + SECTS	Left: program, right: program structure
PROGRAM + GRAPHICS	Left: program, right: programming graphics

Test Run

In the **Test Run** mode of operation, the TNC checks programs and program sections for errors, such as geometrical incompatibilities, missing or incorrect data within the program or violations of the working space. This simulation is supported graphically in different display modes.

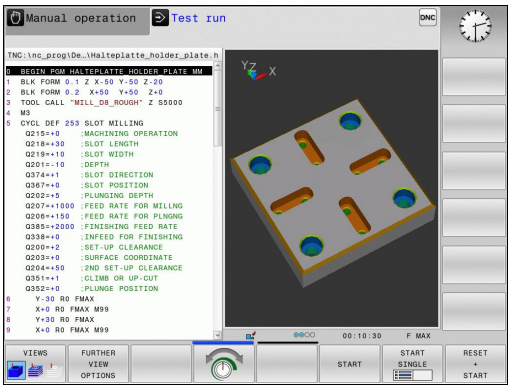

Soft keys for selecting the screen layout

Soft key	Window
PGM	Program
PROGRAM + STATUS	Left: program, right: status display
PROGRAM + GRAPHICS	Left: program, right: graphics
GRAPHICS	Graphic

Program Run, Full Sequence and Program Run, Single Block

In the **Program run full sequence** mode of operation the TNC executes a program continuously to its end or to a manual or programmed stop. You can resume program run after an interruption.

In the **Program run single block** mode of operation you execute each block separately by pressing the machine START button. With point pattern cycles and **CYCL CALL PAT**, the control stops after each point.

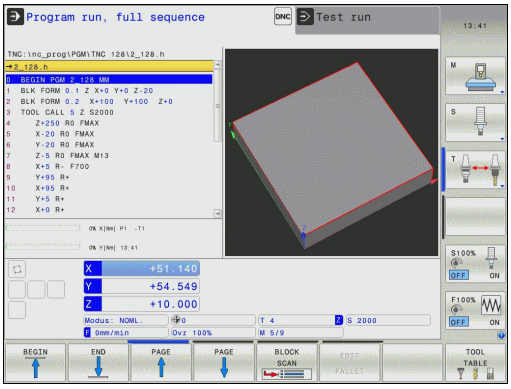

Soft keys for selecting the screen layout

Soft key	Window
PGM	Program
PROGRAM + STATUS	Left: program, right: status display
PROGRAM + GRAPHICS	Left: program, right: graphics
GRAPHICS	Graphic

2.4 Status displays

General status display

The general status display in the lower part of the screen informs you of the current state of the machine tool. It is displayed automatically in the following modes of operation:

- **Program Run, Single Block** and **Program Run, Full Sequence**, except if the screen layout is set to display only, and during
- **Positioning with Manual Data Input**.

In the **Manual Operation** and **El. Handwheel** modes the status display appears in the large window.

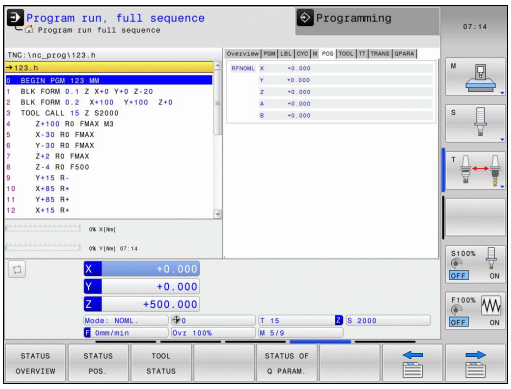

Information in the status display

Icon	Meaning
ACTL	Position display mode, e.g. actual or nominal coordinates of the current position
X Y Z	Machine axes; the TNC displays auxiliary axes in lower-case letters. The sequence and quantity of displayed axes is determined by the machine tool builder. Refer to your machine manual for more information
F S M	The displayed feed rate in inches corresponds to one tenth of the effective value. Spindle speed S, feed rate F and active M functions
	Axis is clamped
	Axis can be moved with the handwheel

Icon	Meaning
	No active program
	Program run has started
	Program run is stopped
	Program run is being aborted

Additional status displays

The additional status displays contain detailed information on the program run. They can be called in all operating modes except for the **Programming** mode of operation.

To switch on the additional status display

- Call the soft-key row for screen layout
- Select the screen layout with additional status display: In the right half of the screen, the TNC shows the **OVERVIEW** status form

To select an additional status display

- Switch the soft-key rows until the STATUS soft keys appear
- Either select the additional status display directly by soft key, e.g. positions and coordinates, or
- use the switch-over soft keys to select the desired view

The available status displays described below can be selected either directly by soft key or with the switch-over soft keys.

Please note that some of the status information described below is not available unless the associated software option is enabled on your TNC.

Overview

After switch-on, the TNC displays the **Overview** status form, provided that you have selected the **PROGRAM+STATUS** screen layout (or **POSITION + STATUS**). The overview form contains a summary of the most important status information, which you can also find on the various detail forms.

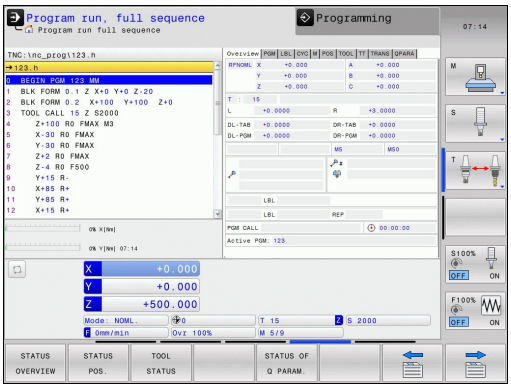

Soft key	Meaning
STATUS OVERVIEW	Position display
	Tool information
	Active M functions
	Active coordinate transformations
	Active subprogram
	Active program section repeat
	Program called with **PGM CALL**
	Current machining time
	Name of the active main program

General program information (PGM tab)

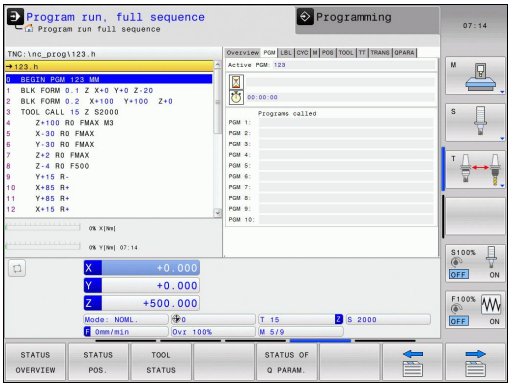

Soft key	Meaning
No direct selection possible	Name of the active main program
	Dwell time counter
	Machining time
	Active programs

Program section repeat/Subprograms (LBL tab)

Soft key	Meaning
No direct selection possible	Active program section repeats with block number, label number, and number of programmed repeats/repeats yet to be run
	Active subprograms with block number in which the subprogram was called and the label number that was called

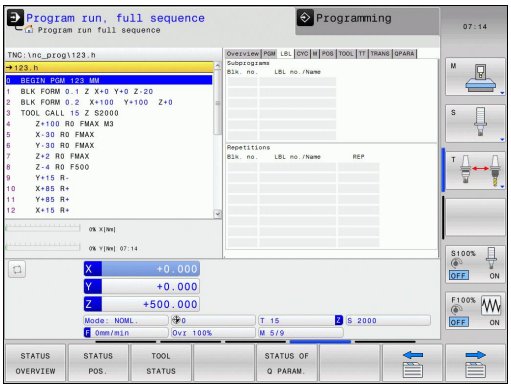

Information on standard cycles (CYC tab)

Soft key	Meaning
No direct selection possible	Active fixed cycle

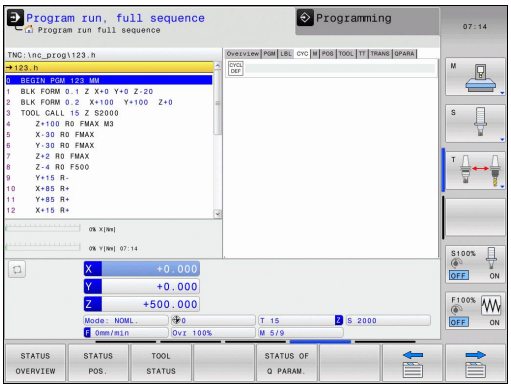

Active miscellaneous functions M (M tab)

Soft key	Meaning
No direct selection possible	List of the active M functions with fixed meaning
	List of the active M functions that are adapted by your machine manufacturer

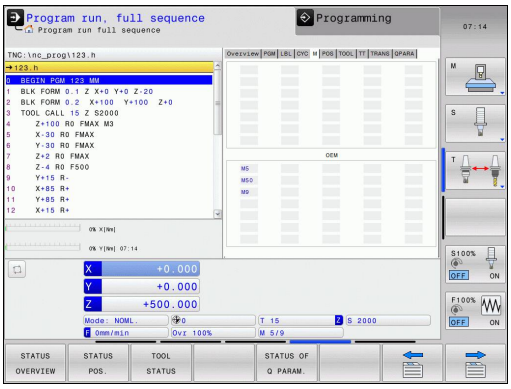

Positions and coordinates (POS tab)

Soft key	Meaning
STATUS POS.	Type of position display, e.g. actual position

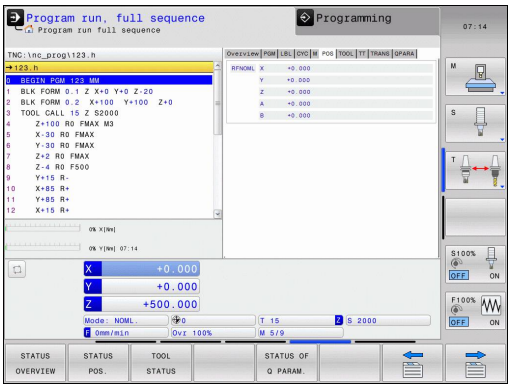

Information on tools (TOOL tab)

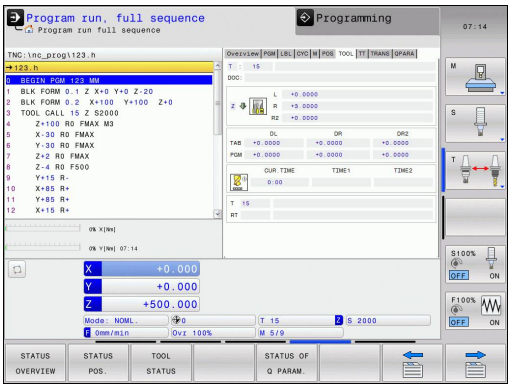

Soft key	Meaning
TOOL STATUS	Display of active tool: ■ T: Tool number and tool name ■ RT: Number and name of a replacement tool
	Tool axis
	Tool length and tool radii
	Oversizes (delta values) from the tool table (TAB) and the **TOOL CALL** (PGM)
	Tool life, maximum tool life (TIME 1) and maximum tool life for **TOOL CALL** (TIME 2)
	Display of programmed tool and replacement tool

Tool measurement (TT tab)

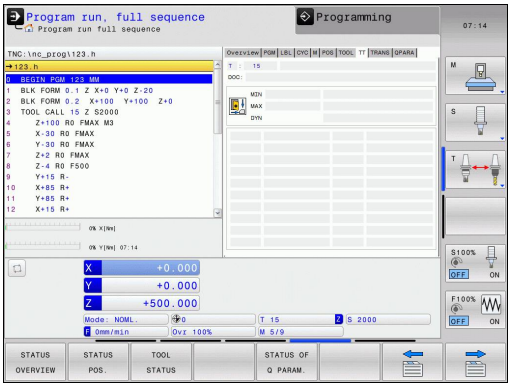

The TNC displays the TT tab only if the function is active on your machine.

Soft key	Meaning
No direct selection possible	Number of the tool to be measured
	Display whether the tool radius or the tool length is being measured
	MIN and MAX values of the individual cutting edges and the result of measuring the rotating tool (DYN = dynamic measurement)
	Cutting edge number with the corresponding measured value. If the measured value is followed by an asterisk, the tolerance in the tool table was exceeded

Coordinate transformations (TRANS tab)

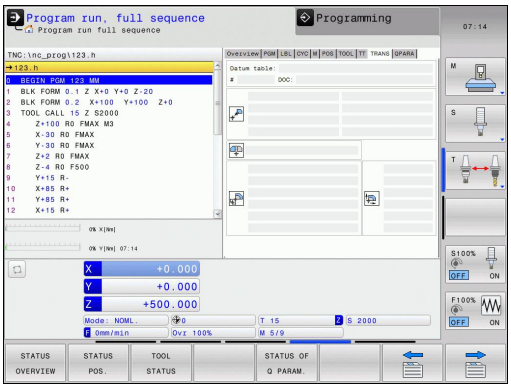

Soft key	Meaning
No direct selection possible	Name of the active datum table
	Active datum number (**#**), comment from the active line of the active datum number (**DOC**) from Cycle 7
	Active datum shift (Cycle 7); The TNC displays an active datum shift in up to 3 (5) axes
	Mirrored axes (Cycle 8)
	Active scaling factor/factors (Cycles 11 / 26); The TNC displays an active scaling factor in up to 6 axes
	Scaling datum

Coordinate transformation cycles: see page 469

Displaying Q parameters (QPARA tab)

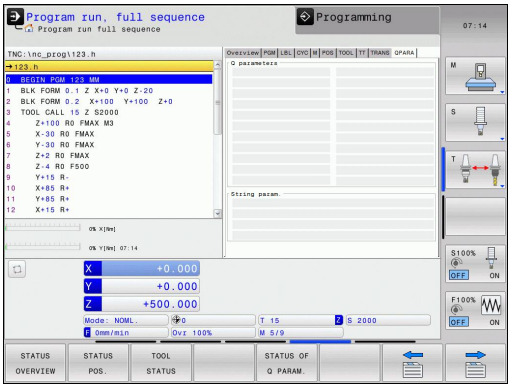

Soft key	Meaning
STATUS OF Q PARAM.	Display the current values of the defined Q parameters
	Display the character strings of the defined string parameters

Press the **Q PARAMETER LIST** soft key. The TNC opens a pop-up window. For each parameter type (Q, QL, QR, QS), define the parameter numbers you wish to control. Separate single Q parameters with a comma, and connect sequential Q parameters with a hyphen, e.g. 1,3,200-208. The input range per parameter type is 132 characters.

The display in the **QPARA** tab always contains eight decimal places. The result of Q1 = COS 89.999 is shown by the control as 0.00001745 for example. Very large or very small values are displayed by the control in exponential notation. The result of Q1 = COS 89.999 * 0.001 is shown by the control as +1.74532925e-08, whereby e-08 corresponds to the factor of 10^{-8}.

2.5 Window manager

The machine tool builder determines the available functions and behavior of the window manager. Refer to your machine manual.

The TNC features the Xfce window manager. Xfce is a standard application for UNIX-based operating systems, and is used to manage graphical user interfaces. The following functions are possible with the window manager:

- Display a task bar for switching between various applications (user interfaces).
- Manage an additional desktop, on which special applications from your machine tool builder can run.
- Control the focus between NC-software applications and those of the machine tool builder.
- The size and position of pop-up windows can be changed. It is also possible to close, minimize and restore the pop-up windows.

The TNC shows a star in the upper left of the screen if an application of the window manager or the window manager itself has caused an error In this case, switch to the window manager and correct the problem. If required, refer to your machine manual.

Task bar

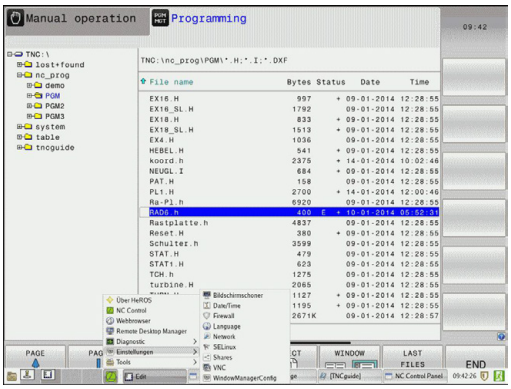

In the task bar you can choose different workspaces by mouse click. The TNC provides the following workspaces:

- Workspace 1: Active mode of operation
- Workspace 2: Active programming mode
- Workspace 3: Manufacturer's applications (optionally available)

In the task bar you can also select other applications that you have started together with the TNC (switch for example to the **PDF viewer** or **TNCguide**)

Click the green HEIDENHAIN symbol to open a menu in which you can get information, make settings or start applications. The following functions are available:

- **About HEROS**: Information about the operating system of the TNC
- **NC Control**: Start and stop the TNC software. Only permitted for diagnostic purposes
- **Web Browser**: Start Mozilla Firefox
- **Remote Desktop Manager** (Option #133): Display and remote operation of external computer units
- **Diagnostics**: Available only to authorized specialists to start diagnostic functions
- **Settings**: Configuration of miscellaneous settings
  - **Date/Time**: Set the date and time
  - **Language**: System dialog language setting. During startup the TNC overwrites this setting with the language setting of the machine parameter CfgLanguage
  - **Network**: Network settings of the control
  - **Screensaver**: Screensaver settings
  - **SELinux**: Security software settings for Linux-based operating systems
  - **Shares**: Settings for external network drives
  - **VNC**: Setting for external softwares that access for maintenance purposes on the control for example (**V**irtual **N**etwork **C**omputing)
  - **WindowManagerConfig**: Available only to authorized specialists for setting the window manager
  - **Firewall**: Firewall settings see "Firewall", page 386
- **Tools**: Only for authorized users. The applications available under tools can be started directly by selecting the pertaining file type in the file management of the TNC (see "File management: Fundamentals", page 98)

2.6 SELinux security software

SELinux is an extension for Linux-based operating systems. SELinux is an additional security software package based on Mandatory Access Control (MAC) and protects the system against the running of unauthorized processes or functions and therefore protects against viruses and other malware.

MAC means that each action must be specifically permitted otherwise the TNC will not run it. The software is intended as protection in addition to the normal access restriction in Linux. Certain processes and actions can only be executed if the standard functions and access control of SELinux permit it.

> ⇨ The SELinux installation of the TNC is prepared to permit running of only those programs installed with the HEIDENHAIN NC software. Other programs cannot be run with the standard installation.

The access control of SELinux under HEROS 5 is regulated as follows:

- The TNC runs only those applications installed with the HEIDENHAIN NC software.
- Files in connection with the security of the software (SELinux system files, HEROS 5 boot files, etc.) may only be changed by programs that are selected explicitly.
- New files generated by other programs must never be executed.
- USB data carriers cannot be deselected
- There are only two processes that are permitted to execute new files:
  - Starting a software update: A software update from HEIDENHAIN can replace or change system files.
  - Starting the SELinux configuration: The configuration of SELinux is usually password-protected by your machine tool builder. Refer here to the relevant machine tool manual.

> ⇨ HEIDENHAIN generally recommends activating SELinux because it provides additional protection against attacks from outside.

2.7 Accessories: HEIDENHAIN 3-D touch probes and electronic handwheels

3-D touch probes

The various HEIDENHAIN 3-D touch probes enable you to:

- Quickly and precisely set datums
- Measure the workpiece
- Measure and inspect tools

The triggering touch probes TS 220 and KT 130

These touch probes are particularly effective for datum setting and workpiece measurement. The TS 220 and KT 130 touch probes transmit the triggering signals to the TNC via cable.

Principle of operation: HEIDENHAIN triggering touch probes feature a wear resisting optical switch that generates an electrical signal as soon as the stylus is deflected. This signal is transmitted to the control, which stores the current position of the stylus as the actual value.

TT 140 tool touch probe for tool measurement

The TT 140 is a triggering 3-D touch probe for tool measurement and inspection. The TNC provides three cycles for this touch probe with which you can measure the tool length and radius either with the spindle rotating or stopped. The TT 140 features a particularly rugged design and a high degree of protection, which make it insensitive to coolants and swarf. The triggering signal is generated by a wear-resistant and highly reliable optical switch.

2.7 Accessories: HEIDENHAIN 3-D touch probes and electronic handwheels

HR electronic handwheels

Electronic handwheels facilitate moving the axis slides precisely by hand. A wide range of traverses per handwheel revolution is available. Apart from the HR 130 and HR 150 panel-mounted handwheels, HEIDENHAIN also offers the HR 410 portable handwheel.

3

Programming: Fundamentals, file management

3.1 Fundamentals

Position encoders and reference marks

The machine axes are equipped with position encoders that register the positions of the machine table or tool. Linear axes are usually equipped with linear encoders, rotary tables and tilting axes with angle encoders.

When a machine axis moves, the corresponding position encoder generates an electrical signal. The TNC evaluates this signal and calculates the precise actual position of the machine axis.

If there is a power interruption, the calculated position will no longer correspond to the actual position of the machine slide. To recover this association, incremental position encoders are provided with reference marks. The scales of the position encoders contain one or more reference marks that transmit a signal to the TNC when they are crossed over. From that signal the TNC can re-establish the assignment of displayed positions to machine positions. For linear encoders with distance-coded reference marks, the machine axes need to move by no more than 20 mm, for angle encoders by no more than 20°.

With absolute encoders, an absolute position value is transmitted to the control immediately upon switch-on. In this way the assignment of the actual position to the machine slide position is re-established directly after switch-on.

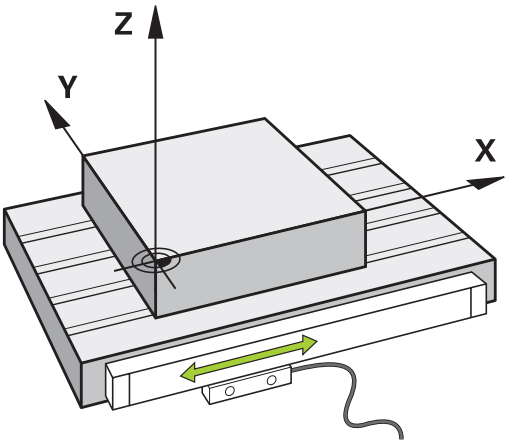

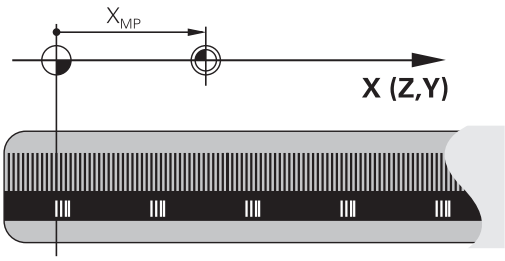

Reference system

A reference system is required to define positions in a plane or in space. The position data are always referenced to a predetermined point and are described through coordinates.

The Cartesian coordinate system (a rectangular coordinate system) is based on the three coordinate axes X, Y and Z. The axes are mutually perpendicular and intersect at one point called the datum. A coordinate identifies the distance from the datum in one of these directions. A position in a plane is thus described through two coordinates, and a position in space through three coordinates.

Coordinates that are referenced to the datum are referred to as absolute coordinates. Relative coordinates are referenced to any other known position (reference point) you define within the coordinate system. Relative coordinate values are also referred to as incremental coordinate values.

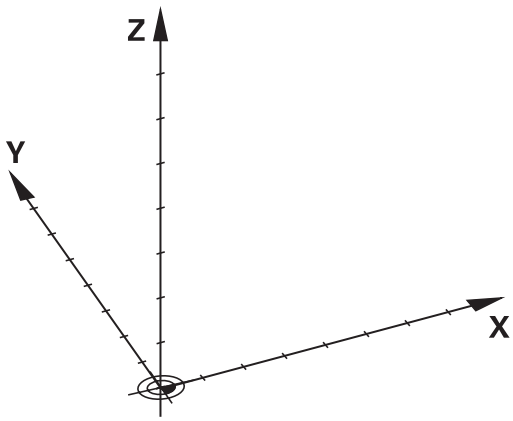

Reference system on milling machines

When using a milling machine, you orient tool movements to the Cartesian coordinate system. The illustration at right shows how the Cartesian coordinate system describes the machine axes. The figure illustrates the right-hand rule for remembering the three axis directions: the middle finger points in the positive direction of the tool axis from the workpiece toward the tool (the Z axis), the thumb points in the positive X direction, and the index finger in the positive Y direction.

The TNC 128 can control up to 4 axes. The axes U, V and W are secondary linear axes parallel to the main axes X, Y and Z, respectively. Rotary axes are designated as A, B and C. The illustration at lower right shows the assignment of secondary axes and rotary axes to the main axes.

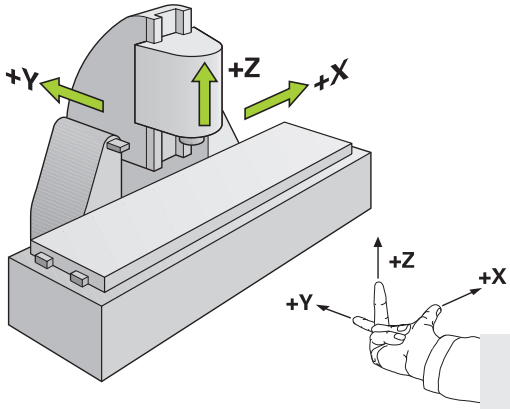

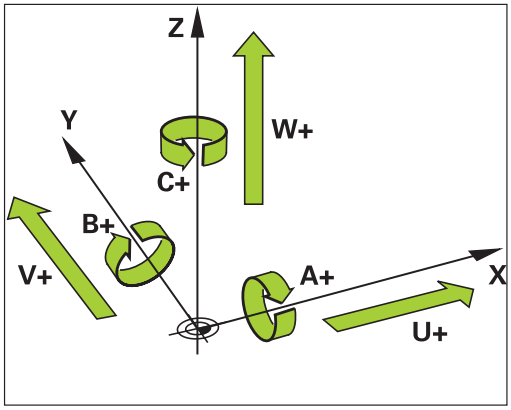

Designation of the axes on milling machines

The X, Y and Z axes on your milling machine are also referred to as tool axis, principal axis (1st axis) and secondary axis (2nd axis). The assignment of the tool axis is decisive for the assignment of the principal and secondary axes.

Tool axis	Principal axis	Secondary axis
X	Y	Z
Y	Z	X
Z	X	Y

Absolute and incremental workpiece positions

Absolute workpiece positions

Absolute coordinates are position coordinates that are referenced to the datum of the coordinate system (origin). Each position on the workpiece is uniquely defined by its absolute coordinates.

Example 1: Holes dimensioned in absolute coordinates

Hole 1	Hole 2	Hole 3
X = 10 mm	X = 30 mm	X = 50 mm
Y = 10 mm	Y = 20 mm	Y = 30 mm

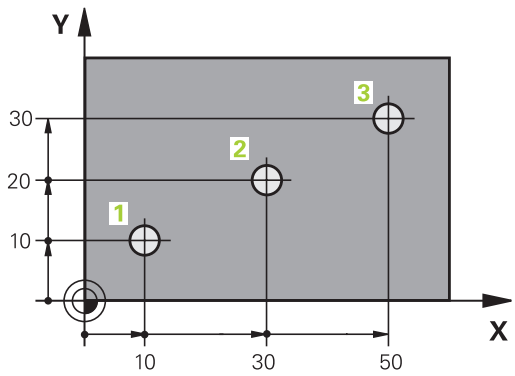

Incremental workpiece positions

Incremental coordinates are referenced to the last programmed nominal position of the tool, which serves as the relative (imaginary) datum. When you write an NC program in incremental coordinates, you thus program the tool to move by the distance between the previous and the subsequent nominal positions. This is why they are also referred to as chain dimensions.

To program a position in incremental coordinates, enter the function "I" before the axis.

Example 2: Holes dimensioned in incremental coordinates

Absolute coordinates of hole 4
X = 10 mm
Y = 10 mm

Hole 5, with respect to 4	Hole 6, with respect to 5
X = 20 mm	X = 20 mm
Y = 10 mm	Y = 10 mm

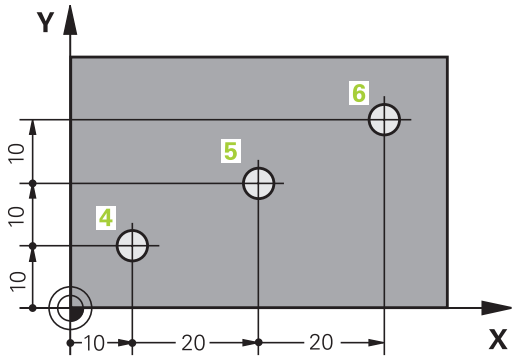

Selecting the datum

A production drawing identifies a certain form element of the workpiece, usually a corner, as the absolute datum. When setting the datum, you first align the workpiece along the machine axes, and then move the tool in each axis to a defined position relative to the workpiece. Set the display of the TNC either to zero or to a known position value for each position. This establishes the reference system for the workpiece, which will be used for the TNC display and your part program.

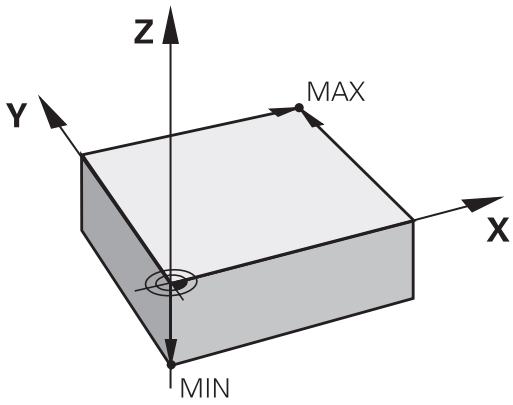

If the production drawing is dimensioned in relative coordinates, simply use the coordinate transformation cycles. Coordinate transformation cycles: see see page 471

If the production drawing is not dimensioned for NC, set the datum at a position or corner on the workpiece from which the dimensions of the remaining workpiece positions can be most easily measured.

Setting datums with 3-D touch probe: see see "Datum setting with 3-D touch probe (option 17)", page 323

Example

The workpiece drawing shows holes (**1** to **4**) whose dimensions are shown with respect to an absolute datum with the coordinates X=0 Y=0. Holes **5** to **7** are dimensioned with respect to a relative datum with the absolute coordinates X=450, Y=750. With the **DATUM SHIFT** cycle you can temporarily set the datum to the position X=450, Y=750, to be able to program holes **5** to **7** without further calculations.

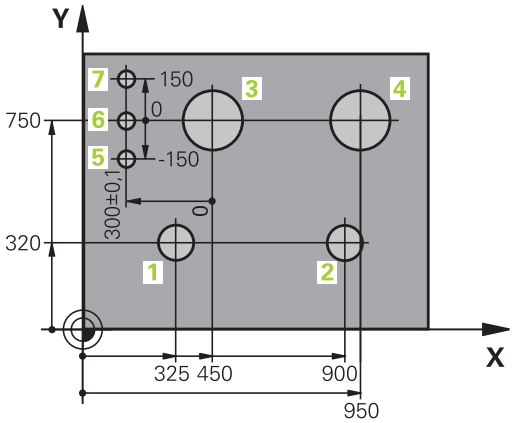

3.2 Opening programs and entering

Organization of an NC program in HEIDENHAIN conversational format

A part program consists of a series of program blocks. The figure at right illustrates the elements of a block.

The TNC numbers the blocks of a part program in ascending sequence.

The first block of a program is identified by **BEGIN PGM**, the program name and the active unit of measure.

The subsequent blocks contain information on:

- The workpiece blank
- Tool calls
- Approaching a safe position
- Feed rates and spindle speeds, as well as
- Movements, cycles and other functions

The last block of a program is identified by **END PGM** the program name and the active unit of measure.

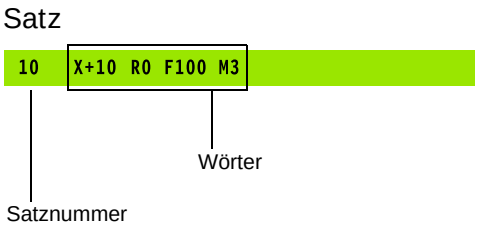

> **!** After each tool call, HEIDENHAIN recommends always traversing to a safe position from which the TNC can position the tool for machining without causing a collision!

Define the blank: BLK FORM

Immediately after initiating a new program, you define an unmachined workpiece blank. If you wish to define the blank at a later stage, press the **SPEC FCT** key, the soft key, and then the **BLK FORM** soft key. The TNC needs this definition for graphic simulation.

> ⇨ You only need to define the workpiece blank if you wish to run a graphic test for the program!

The TNC can depict various types of blank forms.

Soft key	Function
	Define a rectangular blank
	Define a cylindrical blank

Rectangular blank

The sides of the cuboid lie parallel to the X, Y and Z axes. This blank is defined by two of its corner points:

- MIN point: the smallest X, Y and Z coordinates of the blank form, entered as absolute values
- MAX point: the largest X, Y and Z coordinates of the blank form, entered as absolute or incremental values

Example: Display the BLK FORM in the NC program

0 BEGIN PGM NEW MM	Program begin, name, unit of measure
1 BLK FORM 0.1 Z X+0 Y+0 Z-40	Spindle axis, MIN point coordinates
2 BLK FORM 0.2 X+100 Y+100 Z+0	MAX point coordinates
3 END PGM NEW MM	Program end, name, unit of measure

Cylindrical blank

The cylindrical blank form is defined by the dimensions of the cylinder:

- Rotation axis X, Y or Z
- R: Radius of the cylinder (with positive sign)
- L: Length of the cylinder (with positive sign)
- DIST: Shifting along the rotational axis
- RI: Inside radius for a hollow cylinder

> ⇨ The **DIST** and **RI** parameters are optional and do not need to be programmed.

Example: Display the BLK FORM CYLINDER in the NC program

0 BEGIN PGM NEW MM	Program begin, name, unit of measure
1 BLK FORM CYLINDER Z R50 L105 DIST+5 RI10	Spindle axis, radius, length, distance, inside radius
2 END PGM NEW MM	Program end, name, unit of measure

Opening a new part program

You always enter a part program in the **Programming** mode of operation. An example of program initiation:

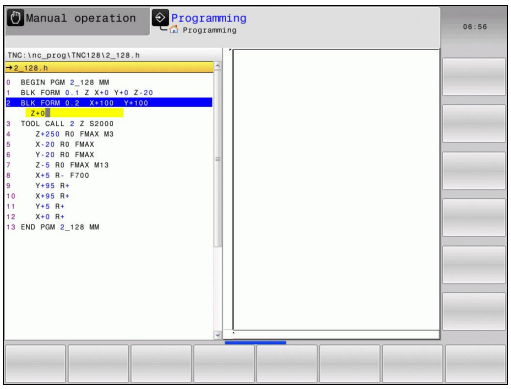

- Select the **Programming** mode of operation
- To call the file manager, press the **PGM MGT** key.

Select the directory in which you wish to store the new program:

FILE NAME = NEW.H

- Enter the new program name and confirm your entry with the **ENT** key
- Select the unit of measure: Press the **MM** or **INCH** soft key. The TNC switches the screen layout and initiates the dialog for defining the **BLK FORM** (workpiece blank)
- Select a rectangular workpiece blank: Press the soft key for a rectangular blank form

WORKING PLANE IN GRAPHIC: XY

- Enter the spindle axis, e.g. **Z**

WORKPIECE BLANK DEF.: MINIMUM

ENT

- Enter in sequence the X, Y and Z coordinates of the MIN point and confirm each of your entries with the **ENT** key

WORKPIECE BLANK DEF.: MAXIMUM

ENT

- Enter in sequence the X, Y and Z coordinates of the MAX point and confirm each of your entries with the **ENT** key

Example: Display the BLK form in the NC program

0 BEGIN PGM NEW MM	Program begin, name, unit of measure
1 BLK FORM 0.1 Z X+0 Y+0 Z-40	Spindle axis, MIN point coordinates
2 BLK FORM 0.2 X+100 Y+100 Z+0	MAX point coordinates
3 END PGM NEW MM	Program end, name, unit of measure

The TNC automatically generates the block numbers as well as the **BEGIN** and **END** blocks.

If you do not wish to define a blank form, cancel the dialog at **Working plane in graphic: XY** by pressing the **DEL** key.

Programming tool movements in conversational

To program a block, initiate the dialog by pressing a axis key. In the screen headline, the TNC then asks you for all the information necessary to program the desired function.

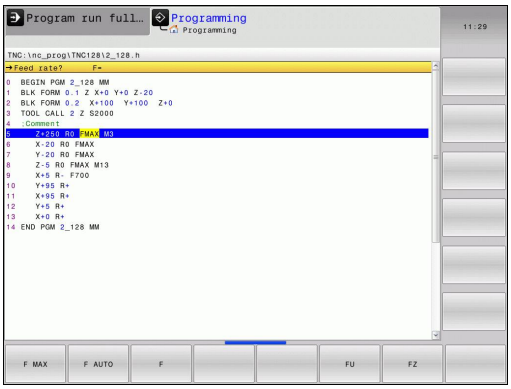

Example of a positioning block

COORDINATES ?

X

- **10** (Enter the target coordinate for the X axis)

ENT

- Go to the next question with **ENT**.

TOOL RADIUS COMP: R+/R-/NO COMP:?

ENT

- Enter **"No radius compensation"** and go to the next question with **ENT**

FEED RATE F=? / F MAX = ENT

- **100** (Enter a feed rate of 100 mm/min for this path contour)

ENT

- Go to the next question with **ENT**.

MISCELLANEOUS FUNCTION M ?

- Enter **3** (miscellaneous function **M3** "Spindle ON").

END

- With the **END** key, the TNC ends this dialog.

The program-block window displays the following line:

```
3 X+10 R0 F100 M3
```

Possible feed rate input

Soft key	Functions for setting the feed rate
F MAX	Rapid traverse, non-modal.
F AUTO	Traverse feed rate automatically calculated in **TOOL CALL**
F	Move at the programmed feed rate (unit of measure is mm/min or 1/10 inch/min). With rotary axes, the TNC interprets the feed rate in degrees/min, regardless of whether the program is written in mm or inches
FU	Define the feed per revolution (units in mm/rev or inch/rev). Caution: In inch-programs, FU cannot be combined with M136
FZ	Define the tooth feed (units in mm/tooth or inch/tooth). The number of teeth must be defined in the tool table in the **CUT** column.

Key	Functions for conversational guidance
NO ENT	Ignore the dialog question
END	End the dialog immediately
DEL	Abort the dialog and erase the block

Actual position capture

The TNC enables you to transfer the current tool position into the program, for example during

- Positioning-block programming
- Cycle programming

To transfer the correct position values, proceed as follows:

- Place the input box at the position in the block where you want to insert a position value

- Select the actual-position-capture function: In the soft-key row the TNC displays the axes whose positions can be transferred

- Select the axis: The TNC writes the current position of the selected axis into the active input box

In the working plane the TNC always captures the coordinates of the tool center, even though tool radius compensation is active.

In the tool axis the TNC always captures the coordinates of the tool tip and thus always takes the active tool length compensation into account.

The TNC keeps the soft-key row for axis selection active until you deactivate it by pressing the actual-position-capture key again. This behavior remains in effect even if you save the current block and open a new one with a axis key. If you select a block element in which you must choose an input alternative via soft key (e.g. for radius compensation), then the TNC also closes the soft-key row for axis selection.

Editing a program

> You cannot edit a program while it is being run by the TNC in a machine operating mode.

While you are creating or editing a part program, you can select any desired line in the program or individual words in a block with the arrow keys or the soft keys:

Soft key/ Keys	Function
PAGE	Go to previous page
PAGE	Go to next page
BEGIN	Go to beginning of program
END	Go to end of program
	Change the position of the current block on the screen. Press this soft key to display additional program blocks that are programmed before the current block
	Change the position of the current block on the screen. Press this soft key to display additional program blocks that are programmed after the current block
↑ ↓	Move from one block to the next
→ ←	Select individual words in a block
GOTO	To select a certain block, press the **GOTO** key, enter the desired block number, and confirm with the **ENT** key. Or: Press the **GOTO** key, enter the block number step and jump up or down the number of entered lines by pressing the **N LINES** soft key

Soft key/key	Function
CE	■ Set the selected word to zero ■ Erase an incorrect number ■ Delete the (clearable) error message
NO ENT	Delete the selected word
DEL	■ Delete the selected block ■ Erase cycles and program sections
INSERT LAST NC BLOCK	Insert the block that you last edited or deleted

Inserting blocks at any desired location

- Select the block after which you want to insert a new block and initiate the dialog

Editing and inserting words

- Select a word in a block and overwrite it with the new one. The plain-language dialog is available while the word is highlighted
- To accept the change, press the **END** key

If you want to insert a word, press the horizontal arrow key repeatedly until the desired dialog appears. You can then enter the desired value.

Looking for the same words in different blocks

- Select a word in a block: Press the arrow key repeatedly until the highlight is on the desired word
- Select a block with the arrow keys

The word that is highlighted in the new block is the same as the one you selected previously.

If you have started a search in a very long program, the TNC shows a progress display window. You then have the option of canceling the search via soft key.

Marking, copying, cutting and inserting program sections

The TNC provides the following functions for copying program sections within an NC program or into another NC program:

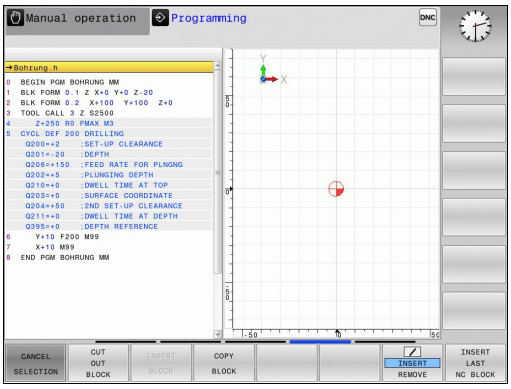

Soft key	Function
SELECT BLOCK	Switch the marking function on
CANCEL SELECTION	Switch the marking function off
CUT OUT BLOCK	Cut the marked block
INSERT BLOCK	Insert the block that is stored in the buffer memory
COPY BLOCK	Copy the marked block

To copy a program section, proceed as follows:

- Select the soft-key row containing the marking functions
- Select the first block of the section you wish to copy
- Mark the first block: Press the **SELECT BLOCK** soft key. The TNC then highlights the block and displays the **CANCEL SELECTION** soft key
- Move the highlight to the last block of the program section you wish to copy or cut. The TNC shows the marked blocks in a different color. You can end the marking function at any time by pressing the **CANCEL SELECTION** soft key
- Copy the selected program section: Press the **COPY BLOCK** soft key. Cut the selected program section: Press the **CUT BLOCK** soft key. The TNC stores the selected block
- Using the arrow keys, select the block after which you wish to insert the copied (cut) program section

> To insert the section into another program, select the corresponding program using the file manager and then mark the block after which you wish to insert the program section.

- Insert the saved program section: Press the **INSERT BLOCK** soft key
- To end the marking function, press the **CANCEL SELECTION** soft key

The TNC search function

The search function of the TNC enables you to search for any text within a program and replace it by a new text, if required.

Finding any text

FIND

- Select the Search function: The TNC superimposes the search window and displays the available search functions in the soft-key row
- Enter the text to be searched for, e.g. **TOOL**

FIND

- Start the search process: The TNC moves to the next block containing the text you are searching for

FIND

- Repeat the search process: The TNC moves to the next block containing the text you are searching for

END

- End the search function

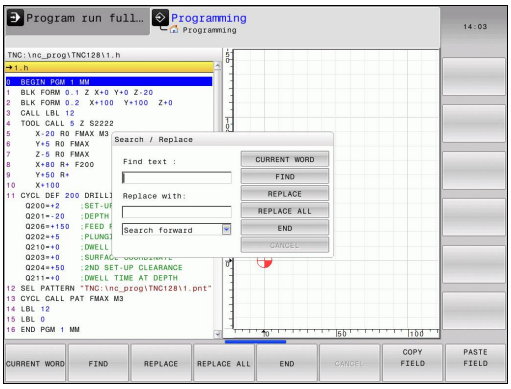

Finding/Replacing any text

The find/replace function is not possible if
- a program is protected
- the program is currently being run by the TNC

When using the **REPLACE ALL** function, ensure that you do not accidentally replace text that you do not want to change. Once replaced, such text cannot be restored.

- Select the block containing the word you wish to find

FIND
- Select the Search function: The TNC superimposes the search window and displays the available search functions in the soft-key row
- Press the **CURRENT WORD** soft key: The TNC loads the first word of the current block. If required, press the info key again to load the desired word.

FIND
- Start the search process: The TNC moves to the next occurrence of the text you are searching for

REPLACE
- To replace the text and then move to the next occurrence of the text, press the **REPLACE** soft key. To replace all text occurrences, press the **REPLACE ALL** soft key. To skip the text and move to its next occurrence press the **FIND** soft key

END
- End the search function

3.3 File management: Fundamentals

Files

Files in the TNC	Type
Programs	
in HEIDENHAIN format	.H
Tables for	
Tools	.T
Tool changers	.TCH
Datums	.D
Points	.PNT
Presets	.PR
Touch probes	.TP
Backup files	.BAK
Dependent files (e.g. structure items)	.DEP
Freely definable tables	.TAB
Texts as	
ASCII files	.A
Protocol files	.TXT
Help files	.CHM

When you write a part program on the TNC, you must first enter a program name. The TNC saves the program to the internal memory as a file with the same name. The TNC can also save texts and tables as files.

The TNC provides a special file management window in which you can easily find and manage your files. Here you can call, copy, rename and erase files.

With the TNC you can manage and save files up to a total size of **2 GB.**

Depending on the setting, the TNC generates a backup file (*.bak) after editing and saving of NC programs. This can reduce the memory space available to you.

File names

When you store programs, tables and texts as files, the TNC adds an extension to the file name, separated by a point. This extension indicates the file type.

File name	File type
PROG20	.H

File names should not exceed 24 characters, otherwise the TNC cannot display the entire file name.

File names on the TNC must comply with this standard: The Open Group Base Specifications Issue 6 IEEE Std 1003.1, 2004 Edition (Posix-Standard). Accordingly, the file names may include the characters below:

A B C D E F G H I J K L M N O P Q R S T U V W X Y Z a b c d e f g h i j k l m n o p q r s t u v w x y z 0 1 2 3 4 5 6 7 8 9 . _ -

You should not use any other characters in file names in order to prevent any file transfer problems.

The maximum limit for the path and file name together is 255 characters, see "Paths", page 101.

Displaying externally generated files on the TNC

The TNC features several additional tools which you can use to display the files shown in the table below. Some of the files can also be edited.

File types	Type
PDF files	pdf
Excel tables	xls csv
Internet files	html
Text files	txt ini
Graphics files	bmp gif jpg png

For further information about displaying and editing the listed file types: see page 113

Data backup

We recommend saving newly written programs and files on a PC at regular intervals.

The TNCremo data transmission freeware from HEIDENHAIN is a simple and convenient method for backing up data stored on the TNC.

You additionally need a data medium on which all machine-specific data, such as the PLC program, machine parameters, etc., are stored. Ask your machine manufacturer for assistance, if necessary.

Take the time occasionally to delete any unneeded files so that the TNC always has enough memory space for system files (such as the tool table).

3.4 Working with the file manager

Directories

To ensure that you can easily find your files, we recommend that you organize your internal memory into directories. You can divide a directory into further directories, which are called subdirectories. With the **-/+** key or **ENT** you can show or hide the subdirectories.

Paths

A path indicates the drive and all directories and subdirectories under which a file is saved. The individual names are separated by a backslash "\".

> The path, including all drive characters, directory and the file name, including the extension, must not exceed 255 characters!

Example

The directory AUFTR1 was created on the TNC drive. Then, in the AUFTR1 directory, the directory NCPROG was created and the part program PROG1.H was copied into it. The part program now has the following path:

TNC:\AUFTR1\NCPROG\PROG1.H

The chart at right illustrates an example of a directory display with different paths.

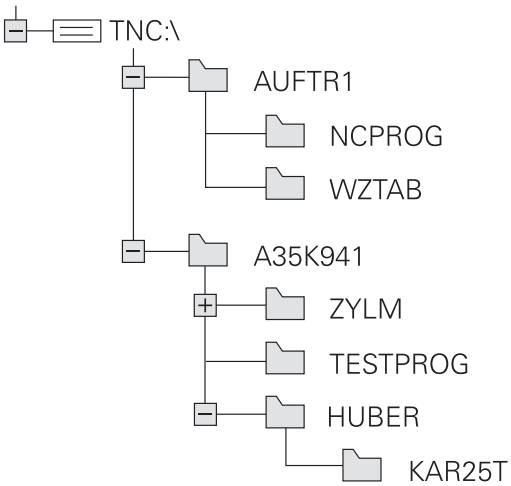

Overview: Functions of the file manager

Soft key	Function	Page
COPY ABC→XYZ	Copy a single file	105
SELECT TYPE	Display a specific file type	104
NEW FILE	Create new file	105
LAST FILES	Display the last 10 files that were selected	108
DELETE	Delete a file	109
TAG	Tag a file	110
RENAME ABC = XYZ	Rename a file	111
PROTECT	Protect a file against editing and erasure	112
UNPROTECT	Cancel file protection	112
IMPORT TABLE	Import a tool table	163
NET	Manage network drives	120
SELECT EDITOR	Select the editor	112
SORT	Sort files by properties	111
COPY DIR	Copy a directory	108
DELETE ALL	Delete directory with all its subdirectories	
UPDATE TREE	Refresh directory	
RENAME ABC = XYZ	Rename a directory	
NEW DIRECTORY	Create a new directory	

Calling the file manager

PGM MGT

- Press the **PGM MGT** key: The TNC displays the file management window (see figure for default setting. If the TNC displays a different screen layout, press the **WINDOW** soft key.)

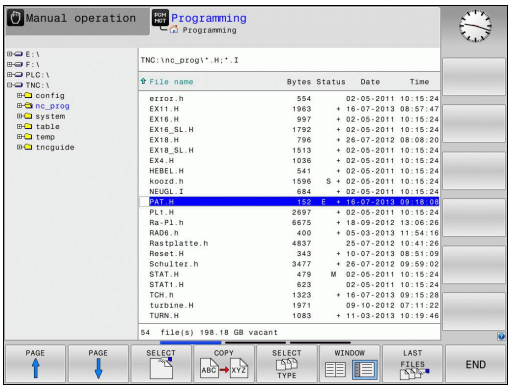

The narrow window on the left shows the available drives and directories. Drives designate devices with which data are stored or transferred. One drive is the internal memory of the TNC. Other drives are the interfaces (RS232, Ethernet), which can be used, for example, for connecting a personal computer. A directory is always identified by a folder symbol to the left and the directory name to the right. Subdirectories are shown to the right of and below their parent directories. If there are subdirectories, you can show or hide them using the **-/+** key.

The wide window on the right shows you all files that are stored in the selected directory. Each file is shown with additional information, illustrated in the table below.

Display	Meaning
File name	File name (max. 25 characters) and file type
Byte	File size in bytes
Status	File properties:
E	Program is selected in the Programming mode of operation
S	Program is selected in the Test Run mode of operation
M	Program is selected in a Program Run mode of operation
+	Program has dependent files with the DEP extension that are not displayed, e.g. with use of the tool usage test
	File is protected against erasing and editing
	File is protected against erasing and editing, because it is being run
Date	Date that the file was last edited
Time	Time that the file was last edited

To display the dependent files, set the machine parameter **CfgPgmMgt/dependentFiles** to **MANUAL**.

Selecting drives, directories and files

PGM MGT

- Calling the File Manager

Use the arrow keys or the soft keys to move the highlight to the desired position on the screen:

- Moves the highlight from the left to the right window, and vice versa

- Moves the highlight up and down within a window

PAGE PAGE

- Moves the highlight one page up or down within a window

Step 1: Select drive

- Move the highlight to the desired drive in the left window

SELECT

- To select a drive, press the **SELECT** soft key, or

ENT

- Press the **ENT** key

Step 2: Select a directory

- Move the highlight to the desired directory in the left-hand window—the right-hand window automatically shows all files stored in the highlighted directory

Step 3: Select a file

SELECT TYPE

- Press the **SELECT TYPE** soft key

SHOW .H

- Press the soft key for the desired file type, or

SHOW ALL

- Press the **SHOW ALL** soft key to display all files, or

- Move the highlight to the desired file in the right window

SELECT

- Press the **SELECT** soft key, or

ENT

- Press the **ENT** key

The TNC opens the selected file in the operating mode from which you called the file manager

Creating a new directory

- Move the highlight in the left window to the directory in which you want to create a subdirectory

- Press the **NEW DIRECTORY** soft key
- Enter a directory name

- Press the **ENT** key

DIRECTORY \CREATE NEW ?

- Press the **OK** soft key to confirm, or

- abort with the **CANCEL** soft key.

Creating a new file

- Select the directory in the left window in which you wish to create the new file
- Position the cursor in the right window

- Press the NEW FILE soft key
- Enter the file name with file extension

- Press the **ENT** key

Copying a single file

- Move the highlight to the file you wish to copy

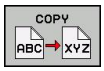

- Press the **COPY** soft key: Select the copying function. The TNC opens a pop-up window

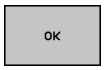

- Enter the name of the destination file and confirm your entry with the **ENT** key or the **OK** soft key: The TNC copies the file into the active directory or into the selected target directory. The original file is retained, or

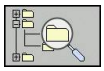

- Press the Target Directory soft key to call a pop-up window in which you select the target directory by pressing the **ENT** key or the **OK** soft key: the TNC copies the file to the selected directory. The original file is retained.

When the copying process has been started with **ENT** or the **OK** soft key, the TNC displays a pop-up window with a progress indicator.

Copying files into another directory

- Select a screen layout with two equally sized windows

In the right window

- Press the **SHOW TREE** soft key
- Move the highlight to the directory into which you wish to copy the files

In the left window

- Press the **SHOW TREE** soft key
- Select the directory with the files that you wish to copy and press the **SHOW FILES** soft key to display the files in this directory

- Call the file tagging functions

- Move the highlight to the file you want to copy and tag it. You can tag several files in this way, if desired

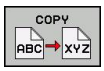

- Copy the tagged files into the target directory

Further tagging functions: see "Tagging files", page 110.

If you have tagged files in both the left and right windows, the TNC copies from the directory in which the highlight is located.

Overwriting files

If you copy files into a directory in which other files are stored under the same name, the TNC will ask whether the files in the target directory should be overwritten:

- To overwrite all files (**Existing files** check box selected), press the **OK** soft key, or
- To leave the files as they are, press the **CANCEL** soft key

If you wish to overwrite a protected file, you need to select the **Protected files** check box or cancel the copying process.

Copying a table

Importing lines to a table

If you are copying a table into an existing table, you can overwrite individual lines with the **REPLACE FIELDS** soft key. Prerequisites:

- The target table must already exist
- The file to be copied must only contain the lines you want to replace
- Both tables must have the same file extension

> **!** The **REPLACE FIELDS** function is used to overwrite lines in the target table. To avoid losing data, create a backup copy of the original table.

Example

With a tool presetter you have measured the length and radius of ten new tools. The tool presetter then generates the TOOL_Import.T tool table with 10 lines (for the 10 tools).

- Copy this table from the external data medium to any directory
- Copy the externally created table to the existing table TOOL.T using the TNC file manager. The TNC asks if you wish to overwrite the existing TOOL.T tool table:
- If you press the **YES** soft key, the TNC will completely overwrite the current TOOL.T tool table. After the copying process the new TOOL.T table consists of 10 lines.
- Or press the **REPLACE FIELDS** soft key for the TNC to overwrite the 10 lines in the TOOL.T file. The data of the other lines is not changed.

Extracting lines from a table

You can select one or more lines in a table and save them in a separate table.

- Open the table from which you want to copy lines
- Use the arrow keys to select the first line to be copied
- Press the **MORE FUNCTIONS** soft key
- Press the **TAG** soft key
- Select additional lines, if required
- Press the **SAVE AS** soft key
- Enter a name for the table in which the selected lines are to be saved

Copying a directory

- Move the highlight in the right window onto the directory you want to copy
- Press the **COPY** soft key: the TNC opens the window for selecting the target directory
- Select the target directory and confirm with **ENT** or the **OK** soft key: The TNC copies the selected directory and all its subdirectories to the selected target directory

Choosing one of the last files selected

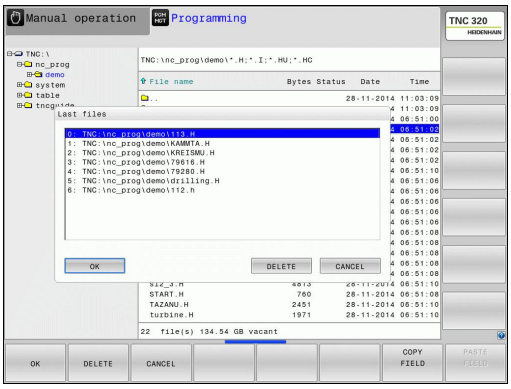

PGM MGT

- Calling the File Manager

LAST FILES

- To display the 10 files last selected: Press the **LAST FILES** soft key.

Use the arrow keys to move the highlight to the file you wish to select:

↑ ↑

- Moves the highlight up and down within a window

OK

- To select a file: Press the **OK** soft key, or...

ENT

- Press the **ENT** key

> ⇨ The **COPY FIELD** soft key allows you to copy the path of a marked file. You can reuse the copied path later, e.g. with a program call via the **PGM CALL** key.

Deleting a file

> **Caution: Data may be lost!**
> Once you delete files they cannot be restored!

- Move the highlight to the file you want to delete

- To select the erasing function: Press the **DELETE** soft key. The TNC asks whether you really want to delete the file
- To confirm deletion: press the **OK** soft key, or
- To interrupt deletion: Press the **CANCEL** soft key

Deleting a directory

> **Caution: Data may be lost!**
> Once you delete files they cannot be restored!

- Move the highlight to the directory you want to delete

- To select the erasing function, press the **DELETE** soft key. The TNC inquires whether you really intend to delete the directory and all its subdirectories and files
- To confirm the deletion, press the **OK** soft key, or
- To cancel deletion, press the **CANCEL** soft key

Tagging files

Soft key	Tagging function
TAG FILE	Tag a single file
TAG ALL FILES	Tag all files in the directory
UNTAG FILE	Untag a single file
UNTAG ALL FILES	Untag all files

Some functions, such as copying or erasing files, can not only be used for individual files, but also for several files at once. To tag several files, proceed as follows:

- Move the highlight to the first file

- To display the tagging functions, press the **TAG** soft key.

- Tag a file by pressing the **TAG FILE** soft key.

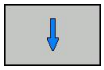

- Move the highlight to the next file you wish to tag: Only works via soft keys. Do not use the arrow keys!

- To tag further files, press the **TAG FILES** soft key, etc.

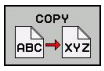

- Copy the tagged files: Press the **COPY** soft key, or

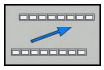

- Delete the tagged files: Leave the active soft key and then press the **DELETE** soft key to delete the tagged files

Renaming a file

- Move the highlight to the file you wish to rename

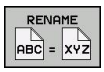

- Select the renaming function
- Enter the new file name; the file type cannot be changed
- To rename: Press the **OK** soft key or the **ENT** key

Sorting files

- Select the folder in which you wish to sort the files

- Select the **SORT** soft key
- Select the soft key with the corresponding display criterion

Additional functions

Protecting a file / Canceling file protection

- Move the highlight to the file you want to protect

- Select the miscellaneous functions: press the soft key

- Enable file protection: Press the soft key. The file is tagged with the "protected" symbol

- To cancel file protection, press the soft key

Selecting the editor

- Move the highlight in the right window onto the file you want to open

- Select the miscellaneous functions: press the soft key

- To select the editor with which to open the selected file, press the soft key
- Mark the desired editor
- Press the **OK** soft key to open the file

Connecting/removing a USB device

- Move the highlight to the left window

- Select the miscellaneous functions: press the soft key
- Shift the soft-key row

- Search for a USB device
- To remove the USB device, move the highlight to the USB device in the directory tree

- Remove the USB device

For more information: see "USB devices on the TNC", page 121.

Additional tools for management of external file types

The additional tools enable you to display or edit various externally created file types on the TNC.

File types	Description
PDF files (pdf)	page 113
Excel spreadsheets (xls, csv)	page 114
Internet files (htm, html)	page 115
ZIP archives (zip)	page 116
Text files (ASCII files, e.g. txt, ini)	page 117
Video files	page 117
Graphics files (bmp, jpg, gif, png)	page 118

> If you transfer files from a PC to the control by means of TNCremo, you must have entered the file name extension pdf, xls, zip, bmp gif, jpg and png in the list of the file types for binary transmission (menu item **Extras >Configuration >Mode** in TNCremo).

Displaying PDF files

To open PDF files directly on the TNC, proceed as follows:

PGM MGT

- Calling the File Manager
- Select the directory in which the PDF file is saved
- Move the highlight to the PDF file

ENT

- Press ENT: The TNC opens the PDF file in its own application using the **PDF viewer** additional tool

> With the key combination ALT+TAB you can always return to the TNC user interface while leaving the PDF file open. Alternatively, you can also click the corresponding symbol in the task bar to switch back to the TNC interface.

> If you position the mouse pointer over a button, a brief tooltip explaining the function of this button will be displayed. More information on how to use the **PDF viewer** is provided under **Help**.

To exit the **PDF viewer**, proceed as follows:

- Use the mouse to select the **File** menu item
- Select the menu item **Close**: The TNC returns to the file manager

If you are not using a mouse, proceed as follows to close the **PDF viewer**:

- Press the key for switching the soft keys: The **PDF viewer** opens the **File** pull-down menu

- Select the **Close** menu item and confirm with the **ENT** key: The TNC returns to the file manager

Displaying and editing Excel files

Proceed as follows to open and edit Excel files with the extension **xls**, **xlsx** or **csv** directly on the TNC:

- Calling the File Manager
- Select the directory in which the Excel file is saved
- Move the highlight to the Excel file

- Press ENT: The TNC opens the Excel file in its own application using the **Gnumeric** additional tool

With the key combination ALT+TAB you can always return to the TNC user interface while leaving the Excel file open. Alternatively, you can also click the corresponding symbol in the task bar to switch back to the TNC interface.

If you position the mouse pointer over a button, a brief tooltip explaining the function of this button will be displayed. More information on how to use the **Gnumeric** function is provided under **Help**.

To exit **Gnumeric**, proceed as follows:

- Use the mouse to select the **File** menu item
- Select the menu item **Close**: The TNC returns to the file manager

If you are not using a mouse, proceed as follows to close the **Gnumeric** additional tool:

- Press the key for switching the soft keys: The **Gnumeric** additional tool opens the **File** pull-down menu

- Select the **Close** menu item and confirm with the **ENT** key: The TNC returns to the file manager

Displaying Internet files

To open Internet files with the extension **htm** or **html** directly on the TNC, proceed as follows:

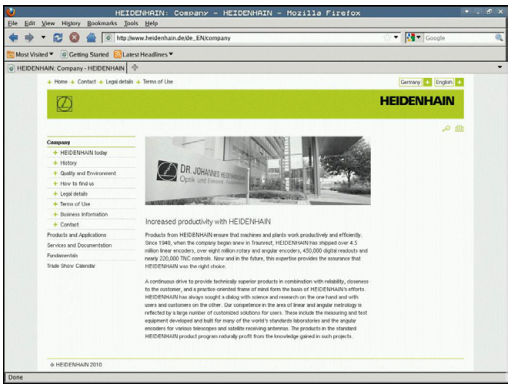

PGM MGT

- Calling the File Manager
- Select the directory in which the Internet file is saved
- Move the highlight to the Internet file

ENT

- Press ENT: The TNC opens the Internet file in its own application using the **Mozilla Firefox** additional tool

> With the key combination ALT+TAB you can always return to the TNC user interface while leaving the PDF file open. Alternatively, you can also click the corresponding symbol in the task bar to switch back to the TNC interface.

> If you position the mouse pointer over a button, a brief tooltip explaining the function of this button will be displayed. More information on how to use **Mozilla Firefox** is provided under **Help**.

To exit **Mozilla Firefox**, proceed as follows:

- Use the mouse to select the **File** menu item
- Select the menu item **Quit**: The TNC returns to the file manager

If you are not using a mouse, proceed as follows to close the **Mozilla Firefox**:

▷

- Press the key for switching the soft keys: The **Mozilla Firefox** opens the **File** pull-down menu

↓

- Select the **Quit** menu item and confirm with the **ENT** key: The TNC returns to the file manager

ENT

Working with ZIP archives

To open ZIP archives with the extension **zip** directly on the TNC, proceed as follows:

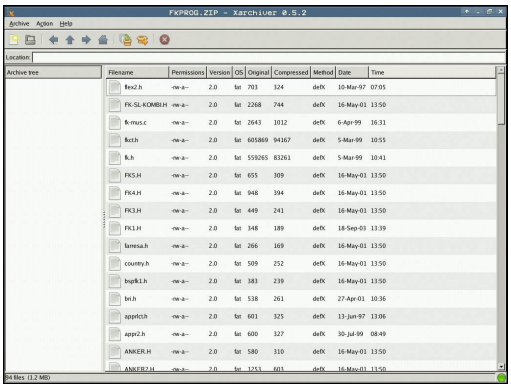

PGM MGT

- Calling the File Manager
- Select the directory in which the archive file is saved
- Move the highlight to the archive file

ENT

- Press ENT: The TNC opens the archive file in its own application using the **Xarchiver** additional tool

> With the key combination ALT+TAB you can always return to the TNC user interface while leaving the archive file open. Alternatively, you can also click the corresponding symbol in the task bar to switch back to the TNC interface.

> If you position the mouse pointer over a button, a brief tooltip explaining the function of this button will be displayed. More information on how to use the **Xarchiver** function is provided under **Help**.

> **!** Please note that the TNC does not carry out any binary-to-ASCII conversion or vice versa when compressing or decompressing NC programs and NC tables. When such files are transferred to TNC controls using other software versions, the TNC may not be able to read them.

To exit **Xarchiver**, proceed as follows:

- Use the mouse to select the **Archive** menu item
- Select the menu item **Quit**: The TNC returns to the file manager

If you are not using a mouse, proceed as follows to close the **Xarchiver**:

▷

- Press the key for switching the soft keys: The **Xarchiver** opens the **Archive** pull-down menu

↓

- Select the **Quit** menu item and confirm with the **ENT** key: The TNC returns to the file manager

ENT

Displaying and editing text files

To open and edit text files (ASCII files, e.g. with the extension **txt**), use the internal text editor. Proceed as follows:

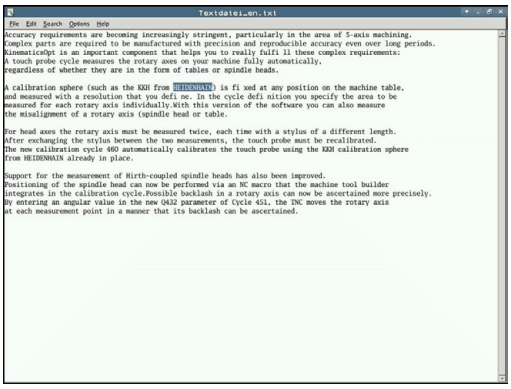

PGM MGT

- Calling the File Manager
- Select the drive and the directory in which the text file is saved
- Move the highlight to the text file

ENT

- Press the ENT key: The TNC opens the text file with the internal text editor

> Alternatively, you can also open the ASCII files using the **Leafpad** additional tool. The shortcuts you are familiar with from Windows, which you can use to edit texts quickly (CTRL+C, CTRL+V,...), are available within **Leafpad**.

> With the key combination ALT+TAB you can always return to the TNC user interface while leaving the text file open. Alternatively, you can also click the corresponding symbol in the task bar to switch back to the TNC interface.

To open **Leafpad**, proceed as follows:

- Use the mouse to select the **Menu** HEIDENHAIN icon from the task bar
- Select the **Tools** and **Leafpad** menu items in the pull-down menu

To exit **Leafpad**, proceed as follows:

- Use the mouse to select the **File** menu item
- Select the menu item **Quit**: The TNC returns to the file manager

Displaying video files

> This feature must be enabled and adapted by the machine tool builder.
> Refer to your machine manual.

To open video files directly on the TNC, proceed as follows:

PGM MGT

- Call the File Manager
- Select the directory in which the video file is saved
- Move the highlight to the video file

ENT

- Press ENT: The TNC opens the video file in its own application

Displaying graphic files

To open graphics files with the extension bmp, gif, jpg or png directly on the TNC, proceed as follows:

PGM MGT

- Call the File Manager
- Select the directory in which the graphics file is saved
- Move the highlight to the graphics file

ENT

- Press ENT: The TNC opens the graphics file in its own application using the **ristretto** additional tool

> With the key combination ALT+TAB you can always return to the TNC user interface while leaving the graphics file open. Alternatively, you can also click the corresponding symbol in the task bar to switch back to the TNC interface.

> More information on how to use the **ristretto** function is provided under **Help**.

To exit **ristretto**, proceed as follows:

- Use the mouse to select the **File** menu item
- Select the menu item **Quit**: The TNC returns to the file manager

If you are not using a mouse, proceed as follows to close the **ristretto** additional tool:

▷

- Press the key for switching the soft keys: The **ristretto** additional tool opens the **File** pull-down menu

↓

- Select the **Quit** menu item and confirm with the **ENT** key: The TNC returns to the file manager

ENT

Data transfer to/from an external data medium

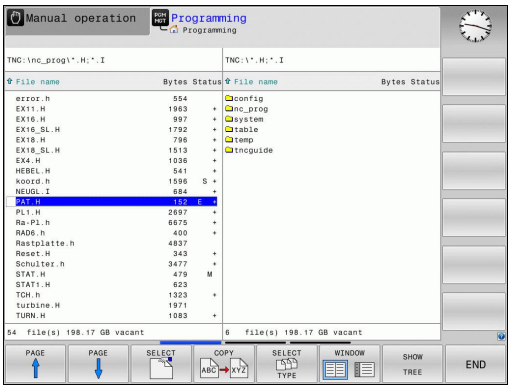

Before you can transfer data to an external data medium, you must set up the data interface (see "Setting up data interfaces", page 373).

Depending on the data transfer software you use, problems can occur occasionally when you transmit data over a serial interface. They can be overcome by repeating the transmission.

PGM MGT

- Call the File Manager

WINDOW

- Select the screen layout for data transfer: press the **WINDOW** soft key.

Use the arrow keys to highlight the file(s) that you want to transfer:

↑ ↓

- Moves the highlight up and down within a window

← →

- Moves the highlight from the right to the left window, and vice versa

If you wish to copy from the TNC to the external data medium, move the highlight in the left window to the file to be transferred.

If you wish to copy from the external data medium to the TNC, move the highlight in the right window to the file to be transferred.

SHOW TREE

- Select another drive or directory: Press the **SHOW TREE** soft key
- Use the arrow keys to select the desired directory

SHOW FILES

- Select the desired file: Press the **SHOW FILES** soft key

COPY

- Use the arrow keys to select the file
- Transfer a single file: Press the **COPY** soft key

- Confirm with the **OK** soft key or with the **ENT** key. A status window appears on the TNC, informing about the copying progress, or

WINDOW

- Stop transfer: Press the **WINDOW** soft key. The TNC displays the standard file manager window again

The TNC in a network

> To connect the Ethernet card to your network, see "Ethernet interface ", page 380.
> The TNC logs error messages during network operation, see "Ethernet interface ", page 380.

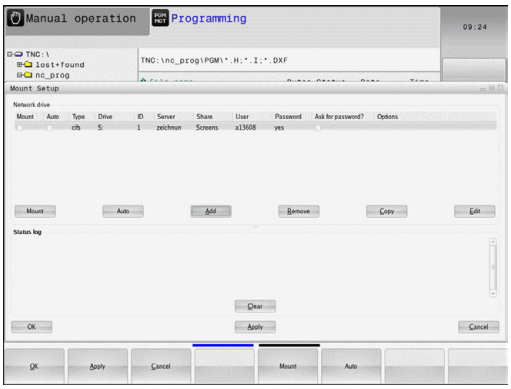

If the TNC is connected to a network, the left directory window displays additional drives (see figure). All the functions described above (selecting a drive, copying files, etc.) also apply to network drives, provided that you have been granted the corresponding rights.

Connecting and disconnecting a network drive

PGM MGT

- To select the program management: Press the **PGM MGT** key. If necessary, press the **WINDOW** soft key to set up the screen as it is shown at the upper right

NET

- To select the network settings: Press the **NETWORK** soft key (second soft key row).
- To manage the network drives: Press the **DEFINE NETWORK CONNECTN.** soft key. In a window the TNC shows the network drives available for access. The soft keys described below are used to define the connection for each drive

Function	Soft key
Establish the network connection. If the connection is active, the TNC marks the **Mount** column.	**Connect**
Disconnect the network connection	**Unmount**
Automatically establish network connection whenever the TNC is switched on. The TNC marks the **Auto** column if the connection is established automatically	**Auto**
Set up new network connection	**Add**
Delete existing network connection	**Remove**
Copy network connection	**Copy**
Edit network connection	**Machining**
Delete the status window	**Clear**

USB devices on the TNC

Caution: Data may be lost!
Only use the USB interface for transferring and saving, not for processing or running programs.

Backing up data from or loading onto the TNC is especially easy with USB devices. The TNC supports the following USB block devices:

- Floppy disk drives with FAT/VFAT file system
- Memory sticks with the FAT/VFAT file system
- Hard disks with the FAT/VFAT file system
- CD-ROM drives with the Joliet (ISO 9660) file system

The TNC automatically detects these types of USB devices when connected. The TNC does not support USB devices with other file systems (such as NTFS). The TNC displays the **USB: TNC does not support device** error message when such a device is connected.

If an error message is displayed when connecting a USB data medium, check the setting in the SELinux security software. ("SELinux security software", page 78)

The TNC also displays the **USB: TNC does not support device** error message if you connect a USB hub. In this case, simply acknowledge the message with the CE key.

In theory, you should be able to connect all USB devices with the file systems mentioned above to the TNC. It may happen that a USB device is not identified correctly by the control. In such cases, use another USB device.

The USB devices appear as separate drives in the directory tree, so you can use the file-management functions described in the earlier chapters correspondingly.

Your machine tool builder can assign permanent names for USB devices. Refer to your machine manual.

Remove the USB device

To remove a USB device, proceed as follows:

- To call the file manager, press the **PGM MGT** key
- Select the left window with the arrow key
- Use the arrow keys to select the USB device to be removed
- Scroll through the soft-key row
- Select additional functions
- Scroll through the soft-key row
- Select the function for removing USB devices. The TNC removes the USB device from the directory tree and reports **The USB device can be removed now**.
- Remove the USB device
- Quit the File Manager

In order to re-establish a connection with a USB device that has been removed, press the following soft key:

- Select the function for reconnection of USB devices

4

Programming: Programming aids

4.1 Screen keyboard

You can enter letters and special characters with the screen keypad or (if available) with a PC keyboard connected over the USB port.

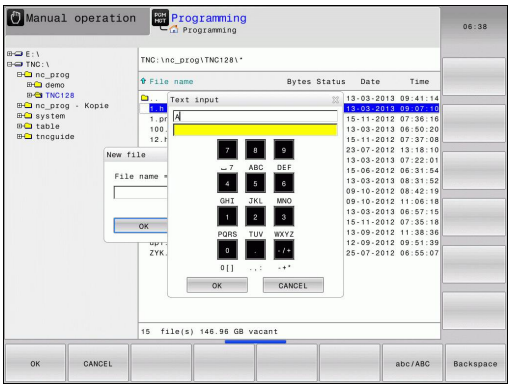

Enter the text with the screen keyboard

- Press the **GOTO** key if you want to enter letters, for example a program name or directory name, using the screen keyboard
- The TNC opens a window in which the numeric entry field of the TNC is displayed with the corresponding letters assigned
- You can move the cursor to the desired character by repeatedly pressing the respective key
- Wait until the selected character is transferred to the input field before you enter the next character
- Use the **OK** soft key to load the text into the open dialog field

Use the **ABC/ABC** soft key to select upper or lower case. If your machine tool builder has defined additional special characters, you can call them with the **SPECIAL CHARACTER** soft key and insert them. To delete individual characters, use the **BACKSPACE** soft key.

4.2 Adding comments

Application

You can add comments to a part program to explain program steps or make general notes.

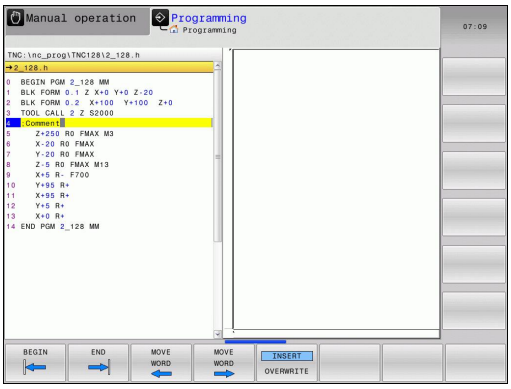

> Depending on the **lineBreak** machine parameter, the TNC displays comments that can no longer be completely displayed on the screen, in several lines, or the **>>** character appears on the screen.
>
> The last character in a comment block must not have any tilde (~).

Add comments

- Select the block after which the comment is to be inserted
- Press the **SPEC FCT** key
- Press the **PROGRAMMING AIDS** soft key
- Press the **INSERT COMMENT** soft key

Functions for editing of the comment

Soft key	Function
BEGIN	Jump to beginning of comment
END	Jump to end of comment
MOVE WORD	Jump to the beginning of a word. Words must be separated by a space
MOVE WORD	Jump to the end of a word. Words must be separated by a space
INSERT OVERWRITE	Switch between paste and overwrite mode

4.3 Display of NC programs

Syntax highlighting

The TNC displays syntax elements with various colors according to their meaning. Programs are made more legible and clear with color-highlighting.

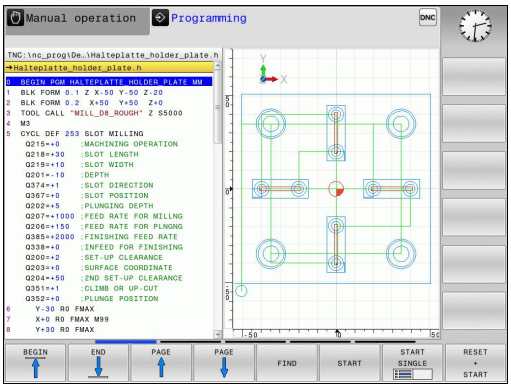

Color highlighting of syntax elements

Use	Color
Standard color	Black
Display of comments	Green
Display of numerical values	Blue
Block number	Purple

Scrollbar

You can move the screen content with the mouse via the scrollbar on the right edge of the program window. In addition, the size and position of the scrollbar indicates program length and cursor position.

4.4 Structuring programs

Definition and applications

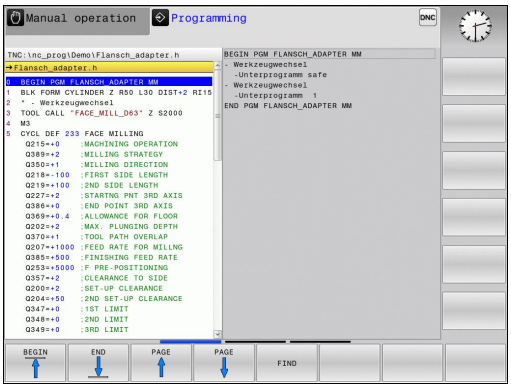

This TNC function enables you to comment part programs in structuring blocks. Structuring blocks are short texts with up to 252 characters and are used as comments or headlines for the subsequent program lines.

With the aid of appropriate structuring blocks, you can organize long and complex programs in a clear and comprehensible manner.

This function is particularly convenient if you want to change the program later. Structuring blocks can be inserted into the part program at any point.

They can also be displayed in a separate window. Use the appropriate screen layout for this.

The inserted structure items are managed by the TNC in a separate file (extension: .SEC.DEP). This speeds navigation in the program structure window.

Displaying the program structure window / Changing the active window

- Display the program structure window: Select the **PGM + SECTS** screen display

- Switch the active window: Press the **CHANGE WINDOW** soft key

Inserting a structuring block in the program window

- Select the block after which the structuring block is to be inserted

- Press the **SPEC FCT** key

- Press the **PROGRAMMING AIDS** soft key

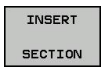

- Press the **INSERT SECTION** soft key
- Enter the structuring text

- If necessary, change the structure depth with the soft key

Selecting blocks in the program structure window

If you are scrolling through the program structure window block by block, the TNC at the same time automatically moves the corresponding NC blocks in the program window. This way you can quickly skip large program sections.

4.5 Calculator

Operation

The TNC features an integrated calculator with the basic mathematical functions.

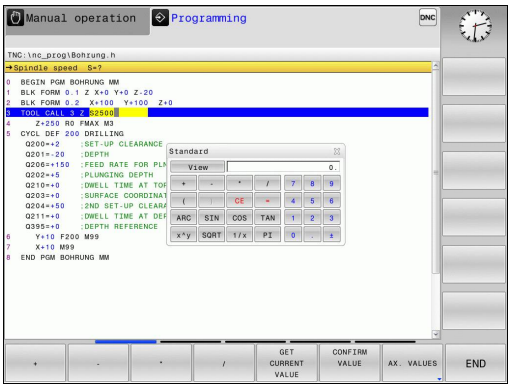

- Use the **CALC** key to show and hide the on-line calculator
- Select the arithmetical functions: The calculator is operated with short commands via soft key or through the alphabetic keyboard.

Calculate function	Shortcut (soft key)
Addition	+
Subtraction	–
Multiplication	*
Division	/
Calculations in parentheses	( )
Arc cosine	ARC
Sine	SIN
Cosine	COS
Tangent	TAN
Powers of values	X^Y
Square root	SQRT
Inversion	1/x
pi (3.14159265359)	PI
Add value to buffer memory	M+
Save the value to buffer memory	MS
Recall from buffer memory	MR
Delete buffer memory contents	MC
Natural logarithm	LN
Logarithm	LOG
Exponential function	e^x
Check the algebraic sign	SGN
Form the absolute value	ABS

Calculate function	Shortcut (soft key)
Truncate decimal places	INT
Truncate integers	FRAC
Modulus operator	MOD
Select view	View
Delete value	CE
Unit of measure	MM or INCH
Show angle values in radians (standard: angle in degrees)	RAD
Select the display mode of the numerical value	DEC (decimal) or HEX (hexadecimal)

Transferring the calculated value into the program

- Use the arrow keys to select the word into which the calculated value is to be transferred
- Superimpose the on-line calculator by pressing the **CALC** key and perform the desired calculation
- Press the **CONFIRM VALUE** soft key for the TNC to transfer the value into the active input box and closes the calculator

You can also transfer values from a program into the calculator. When you press the **GET CURRENT VALUE** soft key or the **GOTO** key, the TNC transfers the value from the active input field to the calculator.

The calculator remains active even after a change in operating modes. Press the **END** soft key to close the calculator.

Functions in the pocket calculator

Soft key	Function
AX. VALUES	Load the nominal or reference value of the respective axis position into the calculator
GET CURRENT VALUE	Load the numerical value from the active input field into the calculator
CONFIRM VALUE	Load the numerical value from the calculator field into the active input field
COPY FIELD	Copy the numerical value from the calculator
PASTE FIELD	Insert the copied numerical value into the calculator
CUTTING DATA CALCULATOR	Open the cutting data calculator
	Position the calculator in the center

You can also shift the calculator with the arrow keys on your keyboard. If you have connected a mouse you can also position the calculator with this.

4.6 Cutting data calculator

Application

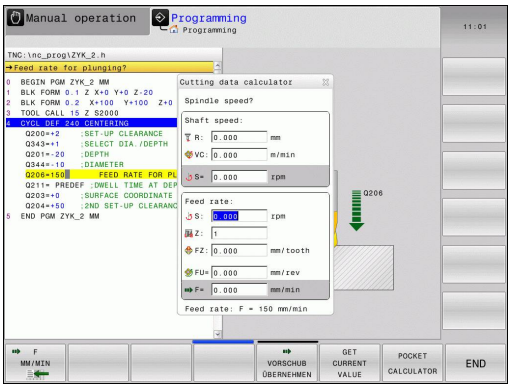

With the cutting data calculator you can calculate the spindle speed and the feed rate for a machine process. Then you can load the calculated values into an opened feed-rate or spindle-speed dialog box in the NC program.

To open the cutting data calculator, press the **CUTTING DATA CALCULATOR** soft key. The TNC shows the soft key if you

- open the calculator (**CALC** key)
- open the dialog field for spindle speed input in the TOOL CALL block
- open the dialog field for feed rate input in positioning blocks or cycles
- enter a feed rate in manual operation (F soft key)
- enter a spindle speed in manual operation (S soft key)

The cutting data calculator is displayed with different input fields depending on whether you calculate a spindle speed or a feed rate:

Window or spindle speed calculation:

Code letter	Meaning
R:	Tool radius (mm)
VC:	Cutting speed (m/min)
S=	Result for spindle speed (rev/min)

Window for feed rate calculation:

Code letter	Meaning
S:	Spindle speed (rpm)
Z:	Number of teeth on the tool (n)
FZ:	Feed per tooth (mm/tooth)
FU:	Feed per revolution (mm/rev)
F=	Result for feed rate (mm/min)

You can also calculate the feed rate in the TOOL CALL block and automatically transfer it to the subsequent positioning blocks and cycles. For feed rate input in positioning blocks or cycles, select the soft key F AUTO. The TNC then uses the feed rate defined in the TOOL CALL block. If you have to change the feed rate later, you only need to adjust the feed-rate value in the TOOL CALL block.

Functions in the cutting data calculator:

Soft key	Function
S U/MIN	Load the spindle speed from the cutting data calculator form into an open dialog field.
F MM/MIN	Load the feed rate from the cutting data calculator form into an open dialog field.
VC M/MIN	Load the cutting speed from the cutting data calculator form into an open dialog field.
FZ MM/ZAHN	Load the feed per tooth from the cutting data calculator form into an open dialog field.
FU MM/U	Load the feed per revolution from the cutting data calculator form into an open dialog field.
ACCEPT TOOL RADIUS	Load the tool radius into the cutting data calculator form
CONFIRM RPM	Load the spindle speed from the open dialog field into the cutting data calculator form
ACCEPT FEED RATE	Load the feed rate from the open dialog field into the cutting data calculator form

Soft key	Function
ACCEPT FEED RATE	Load the feed per revolution from the open dialog field into the cutting data calculator form
ACCEPT FEED RATE	Load the feed per tooth from the open dialog field into the cutting data calculator form
GET CURRENT VALUE	Load the value from an open dialog field into the cutting data calculator form
POCKET CALCULATOR	Switch to the pocket calculator
↓	Move the cutting data calculator in the direction of the arrow
✛	Position the cutting data calculator in the center
INCH	Use inch values in the cutting data calculator
END	Close the cutting data calculator

4.7 Programming graphics

Generate/do not generate graphics during programming

While you are writing the part program, you can have the TNC generate a 2-D pencil-trace graphic of the programmed contour.

- Switch the screen layout to displaying program blocks to the left and graphics to the right: Press the screen layout key and the **PROGRAM + GRAPHICS** soft key

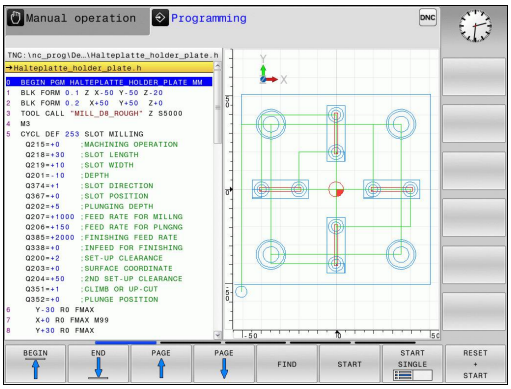

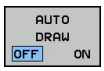

- Set the **AUTO DRAW** soft key to **ON** . While you are entering the program lines, the TNC generates each programmed movement in the graphics window in the right screen half

If you do not wish to have graphics generated during programming, set the **AUTO DRAW** soft key to **OFF**.

If **AUTO DRAW** is set to **ON**, during generation of the 2-D line graphic the control does not consider:

- Program section repeats
- Jump commands
- M functions, such as M2 or M30
- Cycle calls

Only use automatic drawing during contour programming.

Generating a graphic for an existing program

- Use the arrow keys to select the block up to which you want the graphic to be generated, or press **GOTO** and enter the desired block number

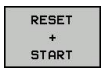

- To generate graphics, press the **RESET + START** soft key

Additional functions:

Soft key	Function
RESET + START	Generate a complete graphic
START SINGLE	Generate programming graphic blockwise
START	Generate a complete graphic or complete it after **RESET + START**
STOP	Stop the programming graphics. This soft key only appears while the TNC is generating the programming graphics
	Select plan view
	Select front view
	Select side view

Block number display ON/OFF

- Shift the soft-key row

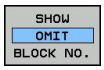

- To show block numbers: Set the **SHOW OMIT BLOCK NO.** soft key to **SHOW**
- Hide block numbers: Set the **SHOW OMIT BLOCK NO.** soft key to **OMIT**

Erasing the graphic

- Shift the soft-key row

- Erase graphic: Press **CLEAR GRAPHICS** soft key

Showing grid lines

- Shift the soft-key row

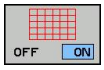

- Show grid lines: Press the **SHOW GRID LINES** soft key

Magnification or reduction of details

You can select the graphics display

- Shift the soft-key row (second row, see figure)

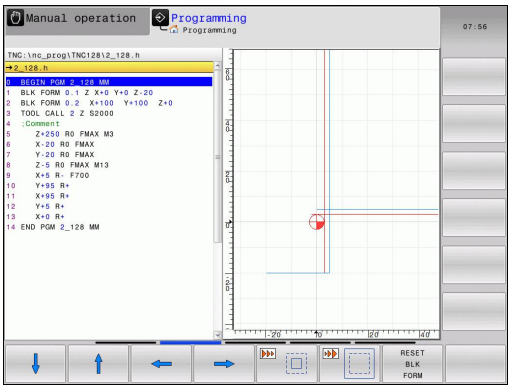

The following functions are available:

Soft key	Function
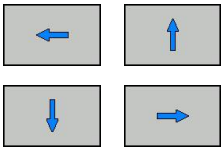	Press the desired soft key to move the frame overlay
	Press the soft key to reduce the detail
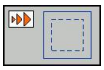	Press the soft key to enlarge the detail

The **RESET WORKPIECE BLANK** soft key is used to restore the original section.

You can also use the mouse to change the graphic display. The following functions are available:

- To shift the model shown: Hold the center mouse button or the wheel button down and move the mouse. If you simultaneously press the shift key, you can only move the model horizontally or vertically.
- To zoom in on a certain area: Mark a zoom area by holding the left mouse button down. After you release the left mouse button, the TNC zooms in on the defined area.
- To rapidly magnify or reduce any area: Rotate the mouse wheel backwards or forwards.

4.8 Error messages

Display of errors

The TNC generates error messages when it detects problems such as:

- Incorrect data input
- Logical errors in the program
- Contour elements that are impossible to machine
- Incorrect use of touch probes

When an error occurs, it is displayed in red type in the header. Long and multi-line error messages are displayed in abbreviated form. Complete information on all pending errors is shown in the error window.

If a rare "processor check error" should occur, the TNC automatically opens the error window. You cannot remove such an error. Shut down the system and restart the TNC.

The error message is displayed in the header until it is cleared or replaced by a higher-priority error.

An error message that contains a program block number was caused by an error in the indicated block or in the preceding block.

Open the error window

ERR

- Press the **ERR** key. The TNC opens the error window and displays all accumulated error messages.

Closing the error window

END

- Press the **END** soft key—or

ERR

- Press the **ERR** key. The TNC closes the error window.

Detailed error messages

The TNC displays possible causes of the error and suggestions for solving the problem:

- Open the error window

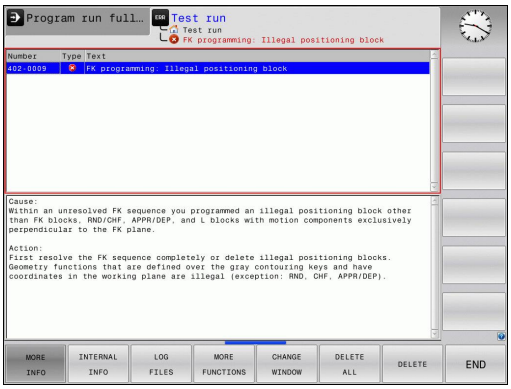

- Information on the error cause and corrective action: Position the highlight on the error message and press the soft key. The TNC opens a window with information on the error cause and corrective action.
- Leave Info: Press the soft key again

INTERNAL INFO soft key

The **INTERNAL INFO** soft key supplies information on the error message. This information is only required if servicing is needed.

- Open the error window.

- Detailed information about the error message: Position the highlight on the error message and press the **INTERNAL INFO** soft key. The TNC opens a window with internal information about the error
- To exit Details, press the **INTERNAL INFO** soft key again.

Clearing errors

Clearing errors outside of the error window

CE

- Clear the errors/messages in the header: Press the CE key

> In some situations (such as during editing), the CE key cannot be used to clear the errors, since the key is reserved for other functions.

Deleting errors

- Open the error window

DELETE

- Clear individual errors: Position the highlight on the error message and press the **DELETE** soft key.

DELETE ALL

- Delete all error messages: Press the **DELETE ALL** soft key.

> If the cause of the error has not been removed, the error message cannot be deleted. In this case, the error message remains in the window.

Error log

The TNC stores errors and important events (e.g. system startup) in an error log. The capacity of the error log is limited. If the log is full, the TNC uses a second file. If this is also full, the first error log is deleted and written to again, and so on. To view the error history, switch between **CURRENT FILE** and **PREVIOUS FILE**.

- Open the error window.

LOG FILES

- Press the **LOG FILES** soft key.

ERROR LOG

- Open the error log file: Press the **ERROR LOG** soft key.

PREVIOUS FILE

- If you need the previous log file: Press the **PREVIOUS FILE** soft key.

CURRENT FILE

- If you need the current log file: Press the **CURRENT FILE** soft key.

The oldest entry is at the beginning of the log file, and the most recent entry is at the end.

Keystroke log

The TNC stores keystrokes and important events (e.g. system startup) in a keystroke log. The capacity of the keystroke log is limited. If the keystroke log is full, the control switches to a second keystroke log. If this second file becomes full, the first keystroke log is cleared and written to again, and so on. To view the keystroke history, switch between **CURRENT FILE** and **PREVIOUS FILE**.

- Press the **LOG FILES** soft key

- Open the keystroke log file: Press the **KEYSTROKE LOG** soft key

- If you need the previous log file: Press the **PREVIOUS FILE** soft key

- If you need the current log file: Press the **CURRENT FILE** soft key

The TNC saves each key pressed during operation in a keystroke log. The oldest entry is at the beginning, and the most recent entry is at the end of the file.

Overview of the keys and soft keys for viewing the logs

Soft key/ Keys	Function
	Go to beginning of keystroke log
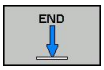	Go to end of keystroke log
	Current keystroke log
	Previous keystroke log
 	Up/down one line
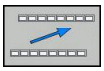	Return to main menu

Informational texts

After a faulty operation, such as pressing a key without function or entering a value outside of the valid range, the TNC displays a (green) text in the header, informing you that the operation was not correct. The TNC clears this informational text upon the next valid input.

Saving service files

If necessary, you can save the "Current status of the TNC," and make it available to a service technician for evaluation. A group of service files is saved (error and keystroke logs, as well as other files that contain information about the current status of the machine and the machining operation).

If you repeat the "Save service files" function with the same file name, the previously saved group of service data files is overwritten. To avoid this, use another file name when you repeat the function.

Saving service files

- Open the error window.

- Press the **LOG FILES** soft key.

- Press the **SAVE SERVICE FILES** soft key: The TNC opens a pop-up window in which you can enter a name for the service file.

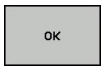

- Save the service files: Press the **OK** soft key.

Calling the TNCguide help system

You can call the TNC's help system via soft key. Immediately the help system shows you the same error explanation that you receive by pressing the **HELP** soft key.

If your machine manufacturer also provides a help system, the TNC shows an additional **MACHINE MANUFACTURER** soft key with which you can call this separate help system. There you will find further, more detailed information on the error message concerned.

4.9 TNCguide context-sensitive help system

Application

Before you can use the TNCguide, you need to download the help files from the HEIDENHAIN home page: see page 148

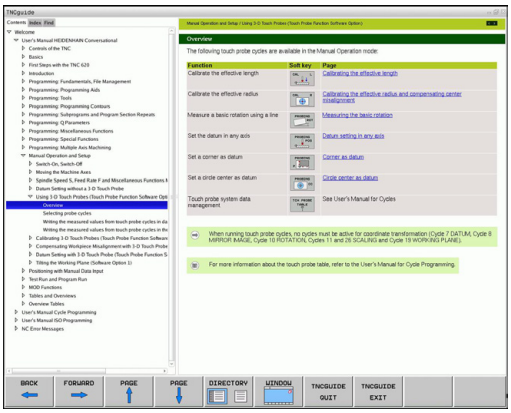

The **TNCguide** context-sensitive help system includes the user documentation in HTML format. The TNCguide is called with the **HELP** key, and the TNC often immediately displays the information specific to the condition from which the help was called (context-sensitive call). Even if you are editing an NC block and press the HELP key, you are usually brought to the exact place in the documentation that describes the corresponding function.

The TNC always tries to start the TNCguide in the language that you have selected as the conversational language on your TNC. If the files with this language are not yet available on your TNC, it automatically opens the English version.

The following user documentation is available in TNCguide:

- Conversational Programming User's Manual **(BHBKlartext.chm)**
- DIN/ISO User's Manual **(BHBIso.chm)**
- User's Manual for Cycle Programming (**BHBtchprobe.chm**)
- List of All Error Messages **(errors.chm)**

In addition, the **main.chm** "book" file is available, with the contents of all existing .chm files.

As an option, your machine tool builder can embed machine-specific documentation in the **TNCguide**. These documents then appear as a separate book in the **main.chm** file.

Working with the TNCguide

Calling the TNCguide

There are several ways to start the TNCguide:

- Press the **HELP** key if the TNC is not already showing an error message
- Click the help symbol at the lower right of the screen beforehand, then click the appropriate soft keys
- Use the file manager to open a help file (.chm file). The TNC can open any .chm file, even if it is not saved on the TNC's internal memory

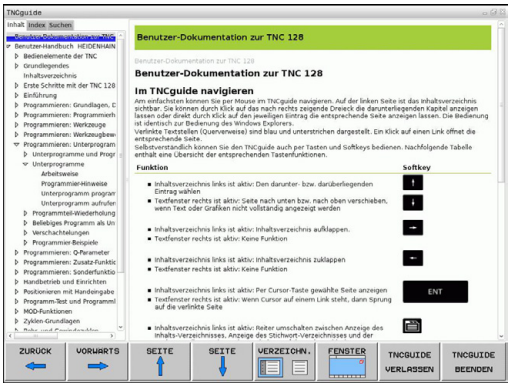

> If one or more error messages are waiting for your attention, the TNC shows the help directly associated with the error messages. To start the **TNCguide,** you first have to acknowledge all error messages.
>
> When the help system is called on the programming station, the TNC starts the internally defined standard browser.

For many soft keys there is a context-sensitive call through which you can go directly to the description of the soft key's function. This functionality requires using a mouse. Proceed as follows:

- Select the soft-key row containing the desired soft key
- Click with the mouse on the help symbol that the TNC displays just above the soft-key row: The mouse pointer turns into a question mark
- Move the question mark to the soft key for which you want an explanation, and click: The TNC opens the TNCguide. If no specific part of the help is assigned to the selected soft key, the TNC opens the book file **main.chm,** in which you can use the search function or the navigation to find the desired explanation manually

Even if you are editing an NC block, context-sensitive help is available:

- Select any NC block
- Select the desired word
- Press the HELP key: The TNC starts the help system and shows a description for the active function (does not apply to miscellaneous functions or cycles that were integrated by your machine tool builder)

Navigating in the TNCguide

It's easiest to use the mouse to navigate in TNCguide. A table of contents appears on the left side of the screen. By clicking the rightward pointing triangle you open subordinate sections, and by clicking the respective entry you open the individual pages. It is operated in the same manner as the Windows Explorer.

Linked text positions (cross references) are shown underlined and in blue. Clicking the link opens the associated page.

Of course you can also operate the TNCguide through keys and soft keys. The following table contains an overview of the corresponding key functions.

Soft key	Function
↑ ↓	■ If the table of contents at left is active: Select the entry above it or below it ■ If the text window at right is active: Move the page downward or upward if texts or graphics are not shown completely
→	■ If the table of contents at left is active: Open up the table of contents ■ If the text window at right is active: No function
←	■ If the table of contents at left is active: Close the table of contents ■ If the text window at right is active: No function
ENT	■ If the table of contents at left is active: Use the cursor key to show the selected page ■ If the text window at right is active: If the cursor is on a link, jump to the linked page
	■ If the table of contents at left is active: Switch the tab between the display of the table of contents, display of the subject index, and the full-text search function and switching to the screen half at right ■ If the text window at right is active: Jump back to the window at left
↑ ↓	■ If the table of contents at left is active: Select the entry above it or below it ■ If the text window at right is active: Jump to next link
BACK ←	Select the page last shown
FORWARD →	Page forward if you have used the "select page last shown" function
PAGE ↑	Move up by one page
PAGE ↓	Move down by one page

Soft key	Function
DIRECTORY	Display or hide table of contents
WINDOW	Switch between full-screen display and reduced display. With the reduced display you can see some of the rest of the TNC window
TNCGUIDE QUIT	The focus is switched internally to the TNC application so that you can operate the control when the TNCguide is open. If the full screen is active, the TNC reduces the window size automatically before the change of focus
TNCGUIDE EXIT	Exiting TNCguide

Subject index

The most important subjects in the Manual are listed in the subject index (**Index** tab). You can select them directly by mouse or with the arrow keys.

The left side is active.

- Select the **Index** tab
- Activate the **Keyword** input field
- Enter the word for the desired subject and the TNC synchronizes the index and creates a list in which you can find the subject more easily, or
- Use the arrow key to highlight the desired keyword
- Use the **ENT** key to call the information on the selected keyword

You can enter the search word only with a keyboard connected via USB.

Full-text search

In the **Find** tab you can search the entire TNCguide for a specific word.

The left side is active.

- Select the **Find** tab
- Activate the **Find:** input field
- Enter the desired word and confirm with the **ENT** key: The TNC lists all sources containing the word
- Use the arrow key to highlight the desired source
- Press the **ENT** key to go to the selected source

The full-text search only works for single words.

If you activate the **Search only in titles** function (by mouse or by selecting it and then pressing the space key), the TNC searches only through headings and ignores the body text.

You can enter the search word only with a keyboard connected via USB.

Downloading current help files

You'll find the help files for your TNC software on the HEIDENHAIN homepage **www.heidenhain.de** under:

- Documentation and information
- User Documentation
- TNCguide
- Select the desired language
- TNC Controls
- Series, e.g. TNC 100
- Desired NC software number, e.g.TNC 128 (77184x-01)
- Select the desired language version from the **TNCguide online help** table
- Download the ZIP file and unpack it
- Move the unzipped CHM files to the TNC in the **TNC:-\tncguide-\en** directory or into the respective language subdirectory (see also the following table)

> ⇨ If you want to use TNCremo to transfer the .chm files to the TNC, then in the **Extras** >**Configuration** >**Mode** >**Transfer in binary format** menu item you have to enter the extension **.CHM**.

Language	TNC directory
German	**TNC:\tncguide\de**
English	**TNC:\tncguide\en**
Czech	**TNC:\tncguide\cs**
French	**TNC:\tncguide\fr**
Italian	**TNC:\tncguide\it**
Spanish	**TNC:\tncguide\es**
Portuguese	**TNC:\tncguide\pt**
Swedish	**TNC:\tncguide\sv**
Danish	**TNC:\tncguide\da**
Finnish	**TNC:\tncguide\fi**
Dutch	**TNC:\tncguide\nl**
Polish	**TNC:\tncguide\pl**
Hungarian	**TNC:\tncguide\hu**
Russian	**TNC:\tncguide\ru**
Chinese (simplified)	**TNC:\tncguide\zh**
Chinese (traditional)	**TNC:\tncguide\zh-tw**
Slovenian	**TNC:\tncguide\sl**
Norwegian	**TNC:\tncguide\no**
Slovak	**TNC:\tncguide\sk**
Korean	**TNC:\tncguide\kr**
Turkish	**TNC:\tncguide\tr**
Romanian	**TNC:\tncguide\ro**

5

Programming: Tools

5.1 Entering tool-related data

Feed rate F

The feed rate **F** is the speed at which the tool center point moves. The maximum feed rates can be different for the individual axes and are set in machine parameters.

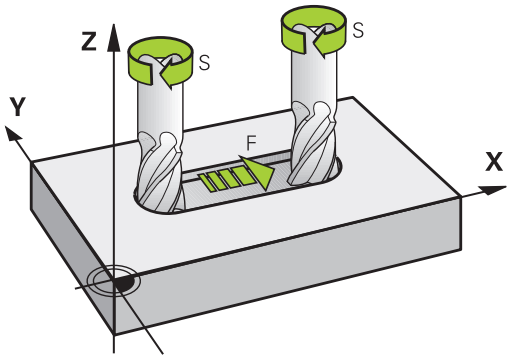

Input

You can enter the feed rate in the **TOOL CALL** block (tool call) and in every positioning block. In millimeter-programs you enter the feed rate **F** in mm/min, and in inch-programs, for reasons of resolution, in 1/10 inch/min. Alternatively, with the corresponding soft keys, you can also define the feed rate in mm per revolution (mm/rev) **FU** or in mm per tooth (mm/tooth) **FZ**.

Rapid traverse

If you wish to program rapid traverse, enter **F MAX.** To enter **FMAX,** press the **ENT** key or the **FMAX** soft key when the dialog question **FEED RATE F = ?** appears on the control's screen.

> To move your machine at rapid traverse, you can also program the corresponding numerical value, e.g. **F30000**. Unlike **FMAX**, this rapid traverse remains in effect not only in the individual block but in all blocks until you program a new feed rate.

Duration of effect

A feed rate entered as a numerical value remains in effect until a block with a different feed rate is reached. **FMAX** is only effective in the block in which it is programmed. After the block with **F MAX** is executed, the feed rate will return to the last feed rate entered as a numerical value.

Changing during program run

You can adjust the feed rate during program run with the feed-rate potentiometer F.

Spindle speed S

The spindle speed S is entered in revolutions per minute (rpm) in a **TOOL CALL** block (tool call). Instead, you can also define the cutting speed Vc in meters per minute (m/min).

Programmed change

In the part program, you can change the spindle speed in a **TOOL CALL** block by entering the new spindle speed only:

TOOL CALL

- Program a tool call: Press the **TOOL CALL** key
- Ignore the dialog question for **Tool number ?** with the **NO ENT** key
- Ignore the dialog question for **Working spindle axis X/Y/Z ?** with the **NO ENT** key
- Enter the new spindle speed for the dialog question **Spindle speed S= ?,** and confirm with **END,** or switch via the **VC** soft key to entry of the cutting speed.

Changing during program run

You can adjust the spindle speed during program run with the spindle speed potentiometer S.

5.2 Tool data

Requirements for tool compensation

You usually program the coordinates of movements as they are dimensioned in the workpiece drawing. To allow the TNC to calculate the tool center path i.e. the tool compensation you must also enter the length and radius of each tool you are using.

Tool data can be entered either directly in the part program with **TOOL DEF** or separately in a tool table. In a tool table, you can also enter additional data for the specific tool. The TNC will consider all the data entered for the tool when executing the part program.

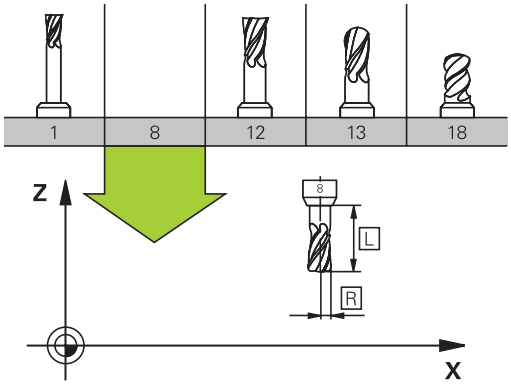

Tool number, tool name

Each tool is identified by a number between 0 and 32767. If you are working with tool tables, you can also enter a tool name for each tool. Tool names can have up to 32 characters.

> Permitted special characters: # $ % & , - . 0 1 2 3 4 5 6 7 8 9 @ A B C D E F G H I J K L M N O P Q R S T U V W X Y Z _
>
> Impermissible characters: <blank space> " ' ( ) * + : ; < = > ? [/] ^ ` a b c d e f g h l j k l m n o p q r s t u v w x y z { | } ~

The tool number 0 is automatically defined as the zero tool with the length L=0 and the radius R=0. In tool tables, tool T0 should also be defined with L=0 and R=0.

Tool length L

You should always enter the tool length L as an absolute value based on the tool reference point.

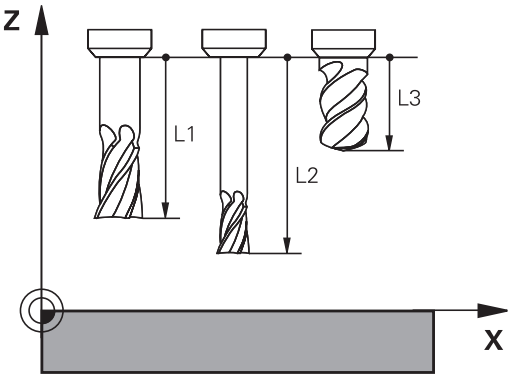

Tool radius R

You can enter the tool radius R directly.

Delta values for lengths and radii

Delta values are offsets in the length and radius of a tool.

A positive delta value describes a tool oversize (**DL**, **DR**, **DR2**>0). If you are programming the machining data with an allowance, enter the oversize value in the **TOOL CALL** block of the part program.

A negative delta value describes a tool undersize (**DL**, **DR**, **DR2**<0). An undersize is entered in the tool table for wear.

Delta values are usually entered as numerical values. In a **TOOL CALL** block, you can also assign the values to Q parameters.

Input range: You can enter a delta value with up to ± 99.999 mm.

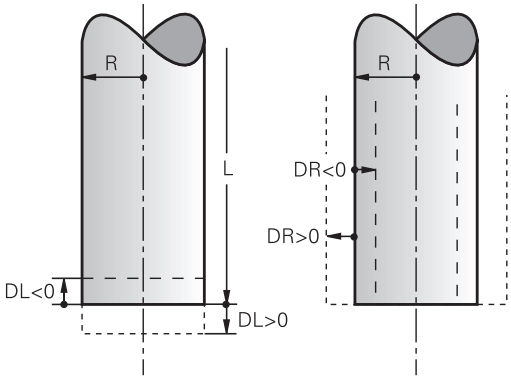

Delta values from the tool table influence the graphical representation of the clearing simulation.

Entering tool data into the program

The machine tool builder determines the scope of function of the **TOOL DEF** function. Refer to your machine manual.

The number, length and radius of a specific tool is defined in the **TOOL DEF** block of the part program:

- Select the tool definition: Press the **TOOL DEF** key

TOOL DEF

- **Tool number**: Each tool is uniquely identified by its tool number
- **Tool length**: Compensation value for the tool length
- **Tool radius**: Compensation value for the tool radius

Example

```
4 TOOL DEF 5 L+10 R+5
```

Enter tool data into the table

You can define and store up to 32767 tools and their tool data in a tool table. Also see the editing functions later in this Chapter.
In order to be able to assign various compensation data to a tool (indexing tool number), insert a line and extend the tool number by a dot and a number from 1 to 9 (e.g. **T 5.2**).

You must use tool tables if

- you wish to use indexed tools such as stepped drills with more than one length compensation value
- your machine tool has an automatic tool changer
- you want to work with Cycles 25x

If you create or manage further tool tables, the file name has to start with a letter.

You can select either list view or form view for tables via the "Screen layout" key.

Tool table: Standard tool data

Abbr.	Inputs	Dialog
T	Number by which the tool is called in the program (e.g. 5, indexed: 5.2)	-
NAME	Name by which the tool is called in the program (no more than 32 characters, all capitals, no spaces)	**Tool name?**
L	Compensation value for tool length L	**Tool length?**
R	Compensation value for the tool radius R	**Tool radius?**
R2	Tool radius R2 for toroid cutters (only for graphical representation of a machining operation with spherical cutters)	**Tool radius 2?**
DL	Delta value for tool length L	**Tool length oversize?**
DR	Delta value for tool radius R	**Tool radius oversize?**
DR2	Delta value for tool radius R2	**Tool radius oversize 2?**
TL	Set tool lock (**TL**: for Tool Locked	**Tool locked? Yes=ENT/No=NO ENT**
RT	Number of a replacement tool – if available – as replacement tool (**RT**: for **R**eplacement **T**ool; also see **TIME2**) An empty field or input **0** means no replacement tool has been defined.	**Replacement tool?**
TIME1	Maximum tool life in minutes. This function can vary depending on the individual machine tool. Your machine manual provides more information	**Maximum tool age?**
TIME2	Maximum tool life in minutes during **TOOL CALL**: If the current tool life reaches or exceeds this value, the TNC changes the tool during the next **TOOL CALL** (see also **CUR_TIME**).	**Max. tool age for TOOL CALL?**
CUR_TIME	Current age of the tool in minutes: The TNC automatically counts the current tool life (**CUR_TIME**: for **CUR**rent **TIME**. A starting value can be entered for used tools	**Current tool age?**

Abbr.	Inputs	Dialog
TYPE	Tool type: Press the ENT key to edit the field; the GOTO key opens a window in which you can select the tool type. You can assign tool types to specify the display filter settings such that only the selected type is visible in the table	**Tool type?**
DOC	Comment on tool (up to 32 characters)	**Tool comment?**
PLC	Information on this tool that is to be sent to the PLC	**PLC status?**
LCUTS	Tooth length of the tool	**Tooth length in the tool axis?**
NMAX	Limit the spindle speed for this tool. The programmed value is monitored (error message) as well as an increase in the shaft speed via the potentiometer. Function inactive: Enter **-**. **Input range**: 0 to +999999, if function not active: enter **-**	**Maximum shaft speed [rpm]**
TP_NO	Reference to the number of the touch probe in the touch-probe table	**Number of the touch probe**
T-ANGLE	Point angle of the tool.	**point angle**
PITCH	Thread pitch of the tool. Used by tapping cycles (Cycle 206, Cycle 207 and Cycle 209). A positive algebraic sign means a right-hand thread.	**Tool thread pitch?**
LAST_USE	Date and time that the tool was last inserted via **TOOL CALL**	**Date/time of last tool call**

Tool table: Tool data required for automatic tool measurement

Abbr.	Inputs	Dialog
CUT	Number of teeth (99 teeth maximum)	**Number of teeth?**
LTOL	Permissible deviation from tool length L for wear detection. If the entered value is exceeded, the TNC locks the tool (status **L**). Input range: 0 to 0.9999 mm	**Wear tolerance: length?**
RTOL	Permissible deviation from tool radius R for wear detection. If the entered value is exceeded, the TNC locks the tool (status **L**). Input range: 0 to 0.9999 mm	**Wear tolerance: radius?**
R2TOL	Permissible deviation from tool radius R2 for wear detection. If the entered value is exceeded, the TNC locks the tool (status **L**). Input range: 0 to 0.9999 mm	**Wear tolerance: Radius 2?**
DIRECT	Cutting direction of the tool for measuring the tool during rotation	**Cutting direction? M4=ENT/M3=NOENT**
R-OFFS	Tool radius measurement: Tool offset between stylus center and tool center. Default setting: No value entered (offset = tool radius)	**Tool offset: radius?**
L-OFFS	Tool length measurement: Tool offset in addition to **offsetToolAxis** between upper surface of stylus and lower surface of tool. Default: 0	**Tool offset: length?**
LBREAK	Permissible deviation from tool length **L** for breakage detection. If the entered value is exceeded, the TNC locks the tool (status **L**). Input range: 0 to 3.2767 mm	**Breakage tolerance: length?**
RBREAK	Permissible deviation from tool radius R for breakage detection. If the entered value is exceeded, the TNC locks the tool (status **L**). Input range: 0 to 0.9999 mm	**Breakage tolerance: radius?**

Editing the tool table

The tool table that is active during execution of the part program is designated TOOL.T and must be saved in the **TNC:\table** directory.

Other tool tables that are to be archived or used for test runs are given different file names with the extension .T. By default, for the **Test Run** and **Programming** modes the TNC also uses the TOOL.T tool table. In the **Test Run** mode, press the **TOOL TABLE** soft key to edit it.

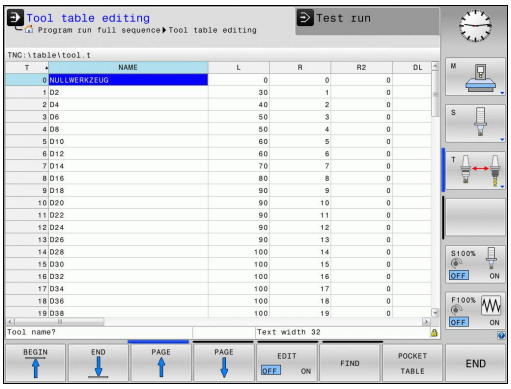

To open the tool table TOOL.T:

- Select any machine operating mode

- Select the tool table: Press the **TOOL TABLE** soft key

- Set the **EDIT** soft key to **ON**

Displaying only specific tool types (filter setting)

- Press the **TABLE FILTER** soft key (fourth soft-key row)
- Select the tool type by pressing a soft key: The TNC only shows tools of the type selected
- Cancel the filter: Press the **SHOW ALL** soft key

The machine tool builder adapts the features of the filter function to the requirements of your machine. Refer to your machine manual.

Hiding or sorting the tool table columns

You can adapt the layout of the tool table to your needs. Columns that should not be displayed can be hidden:

- Press the **SORT/HIDE COLUMNS** soft key (fourth soft-key row)
- Select the appropriate column name with the arrow key
- Press the **HIDE COLUMN** soft key to remove this column from the table layout

You can also modify the sequence of columns in the table:

- You can also modify the sequence of columns in the table with the **Move to** dialog. The entry highlighted in **Displayed columns** is moved in front of this column

You can use a connected mouse or the TNC keyboard to navigate in the form. Navigation using the TNC keyboard:

- Press the navigation keys to go to the input fields. Use the arrow keys to navigate within an input field. To open pop-down menus, press the **GOTO** key.

With the **Fix number of columns** function, you can define how many columns (0 -3) are fixed to the left screen edge. These columns are also displayed if you navigate in the table to the right.

Opening any other tool table

- Select the **Programming** mode of operation

PGM MGT

- Call the File Manager
- Select a file or enter a new file name. Conclude your entry with the **ENT** key or the **SELECT** soft key

When you have opened the tool table, you can edit the tool data by moving the cursor to the desired position in the table with the arrow keys or the soft keys. You can overwrite the stored values, or enter new values at any position. Additional functions are illustrated in the table below.

Soft key	Editing functions for tool tables
BEGIN	Select beginning of table
END	Select end of table
PAGE	Select previous page in table
PAGE	Select next page in table
FIND	Find the text or number
BEGIN LINE	Move to beginning of line
END LINE	Move to end of line
COPY FIELD	Copy highlighted field
PASTE FIELD	Insert copied field
APPEND N LINES	Add the entered number of lines (tools) at the end of the table
INSERT LINE	Adding a row with tool number for entering
DELETE LINE	Delete current line (tool)
SORT	Sort the tools according to the content of a column
CUTTER	Show all cutters in the tool table
TAP/ THREAD CUTTER	Show all taps/thread cutters in the tool table
TOUCH PROBE	Show all touch probes in the tool table

Exiting any other tool table

- Call the file manager and select a file of a different type, such as a part program

Importing tool tables

The machine manufacturer can adapt the **IMPORT TABLE** function. Refer to your machine manual.

If you export a tool table from an iTNC 530 and import it into a TNC 128, you have to adapt its format and content before you can use the tool table. On the TNC 128, you can adapt the tool table conveniently with the **IMPORT TABLE** function. The TNC converts the contents of the imported tool table to a format valid for the TNC 128 and saves the changes to the selected file. Follow this procedure:

- Save the tool table of the iTNC 530 to the **TNC:\table** directory
- Select the **Programming** mode of operation.**Programming**
- Call the file manager: Press the **PGM MGT** key
- Move the highlight to the tool table you want to import
- Press the **MORE FUNCTIONS** soft key
- Shift the soft-key row
- Select the **IMPORT TABLE** soft key: The TNC inquires whether you really want to overwrite the selected tool table
- Do not overwrite the file: Press the **CANCEL** soft key, or
- Overwrite the file: Press the **OK** soft key
- Open the converted table and check its contents

The following characters are permitted in the **Name** column of the tool table: # $ % & , - . 0 1 2 3 4 5 6 7 8 9 @ A B C D E F G H I J K L M N O P Q R S T U V W X Y Z _
The TNC changes a comma in the tool name to a period during import.

The TNC overwrites the selected tool table when running the **IMPORT TABLE** function. To avoid losing data, be sure to make a backup copy of your original tool table before importing it!

When importing a tool table, the TNC 128 saves all unavailable tool types (**TYPE** column) as milling tools (type: **MILL**).

When tool tables are imported from an iTNC 530, all existing tools are imported along with their corresponding tool type. Nonexistent tool types are imported as type 0 (MILL). Check the tool table after the import.

Pocket table for tool changer

The machine tool builder adapts the features of the pocket table to the requirements of your machine. Refer to your machine manual.

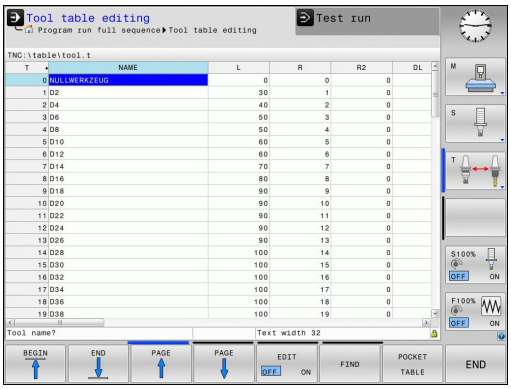

For automatic tool changing you need the a pocket table. You manage the assignment of your tool changer in the pocket table. The pocket table is in the **TNC:\TABLE** directory. The machine tool builder can adapt the name, path and content of the pocket table. You can also select various layouts using soft keys in the **TABLE FILTER** menu.

Editing a pocket table in a Program Run operating mode

- To select the tool table, press the **TOOL TABLE** soft key.

- Select the pocket table: Press the **POCKET TABLE** soft key

- Set the **EDIT** soft key to **ON.** On your machine this might not be necessary or even possible. Refer to your machine manual.

Selecting a pocket table in the Programming mode of operation

PGM MGT

- Call the File Manager
- Display the file types: Press the **SHOW ALL** soft key
- Select a file or enter a new file name. Conclude your entry with the **ENT** key or the **SELECT** soft key

Abbr.	Inputs	Dialog
P	Pocket number of the tool in the tool magazine	-
T	Tool number	**Tool number?**
RSV	Pocket reservation for box magazines	**Pocket reserv.: Yes = ENT / No = NOENT**
ST	Special tool (**ST**); If your special tool blocks pockets in front of and behind its actual pocket, these additional pockets need to be locked in column L (status L).	**Special tool?**
F	The tool is always returned to the same pocket in the tool magazine	**Fixed pocket? Yes = ENT / No = NO ENT**
L	Locked pocket (see also column ST)	**Pocket locked Yes = ENT / No = NO ENT**
DOC	Display of the comment to the tool from TOOL.T	-
PLC	Information on this tool pocket that is to be sent to the PLC	**PLC status?**
P1 ... P5	Function is defined by the machine tool builder. The machine tool documentation provides further information	**Value?**
PTYP	Tool type. Function is defined by the machine tool builder. The machine tool documentation provides further information	**Tool type for pocket table?**
LOCKED_ABOVE	Box magazine: Lock the pocket above	**Lock the pocket above?**
LOCKED_BELOW	Box magazine: Lock the pocket below	**Lock the pocket below?**
LOCKED_LEFT	Box magazine: Lock the pocket at left	**Lock the pocket at left?**
LOCKED_RIGHT	Box magazine: Lock the pocket at right	**Lock the pocket at right?**

Soft key	Editing functions for pocket tables
BEGIN	Select beginning of table
END	Select end of table
PAGE	Select previous page in table
PAGE	Select next page in table
RESET POCKET TABLE	Reset pocket table
RESET COLUMN T	Reset tool number column T
BEGIN LINE	Go to beginning of the line
END LINE	Go to end of the line
SIMULATED TOOL CHANGE	Simulate a tool change
SELECT	Select a tool from the tool table: The TNC shows the contents of the tool table. Use the arrow keys to select a tool, press **OK** to transfer it to the pocket table
EDIT CURRENT FIELD	Edit the current field
SORT	Sort the view

The machine manufacturer defines the features, properties and designations of the various display filters. Refer to your machine manual.

Call tool data

A **TOOL CALL** in the part program is defined with the following data:

- Select the tool call function with the **TOOL CALL** key

TOOL CALL

- **Tool number**: Enter the number or name of the tool. The tool must already be defined in a **TOOL DEF** block or in the tool table. With the **TOOL NAME** soft key you can enter a name. With the **QS** soft key you enter a string parameter. The TNC automatically places the tool name in quotation marks. You have to assign a tool name to a string parameter first. Names always refer to an entry in the active tool table TOOL .T. If you wish to call a tool with other compensation values, also enter the index you defined in the tool table after the decimal point. There is a **SELECT** soft key for calling a window from which you can select a tool defined in the tool table TOOL.T directly without having to enter the number or name
- **Working spindle axis X/Y/Z**: Enter the tool axis
- **Spindle speed S**: Enter the spindle speed S in revolutions per minute (rpm). Instead, you can define the cutting speed Vc in meters per minute (m/min). Press the **VC** soft key
- **Feed rate F**: Enter feed rate **F** in millimeters per minute (mm/min). Alternatively, with the corresponding soft keys, you can also define the feed rate in mm per revolution (mm/rev) **FU** or in mm per tooth (mm/tooth) **FZ**. The feed rate is effective until you program a new feed rate in a positioning or **TOOL CALL** block
- **Tool length oversize DL**: Enter the delta value for the tool length
- **Tool radius oversize DR**: Enter the delta value for the tool radius
- **Tool radius oversize DR2**: Enter the delta value for the tool radius 2

You can also search for a tool in the pop-up window. To do so, press the **GOTO** or **SEARCH** soft key and enter the tool number or tool name. With the **OK** soft key you can load the tool into the dialog box.

Example: Tool call

Call tool number 5 in the tool axis Z with a spindle speed 2500 rpm and a feed rate of 350 mm/min. The tool length and tool radius 2 are to be programmed with an oversize of 0.2 and 0.05 mm, the tool radius with an undersize of 1 mm.

```
20 TOOL CALL 5.2 Z S2500 F350 DL+0.2 DR-1 DR2+0.05
```

The character **D** preceding **L**, **R** and **R2** designates delta values.

Preselection of tools

The preselection of tools with **TOOL DEF** can vary depending on the individual machine tool. Refer to your machine manual.

If you are working with tool tables, use a **TOOL DEF** block to preselect the next tool. Simply enter the tool number or a corresponding Q parameter, or type the tool name in quotation marks.

Tool change

Automatic tool change

The tool change function can vary depending on the individual machine tool. Refer to your machine manual.

If your machine tool has automatic tool changing capability, the program run is not interrupted. When the TNC reaches a **TOOL CALL** it replaces the inserted tool by another from the tool magazine.

Tool usage test

The tool usage test function must be enabled by your machine manufacturer. Refer to your machine manual.

In order to be able to conduct a tool usage test, tool usage files have to be generated, see page 367

The NC program has to be completely simulated in the **Test Run** operating mode or executed in the **Program Run, Full Sequence or Single Block** operating mode.

Applying the tool usage test

Before starting a program in the Program Run mode of operation, you can use the **TOOL USAGE** and **TOOL USAGE TEST** soft keys to check whether the tools being used in the selected program are available and have sufficient remaining service life. The TNC then compares the actual service-life values in the tool table with the nominal values from the tool usage file.

After you have pressed the **TOOL USAGE TEST** soft key, the TNC displays the result of the tool usage test in a pop-up window. To close the pop-up window, press the ENT key.

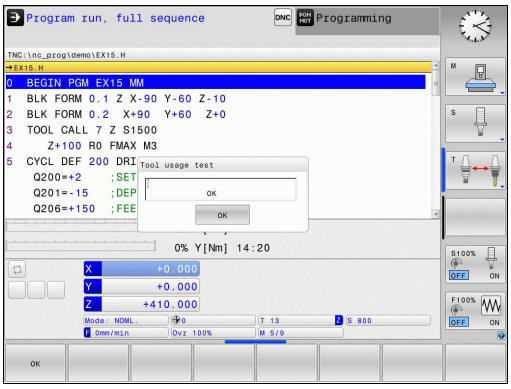

The TNC saves the tool usage times in a separate file with the extension **pgmname.H.T.DEP**. This file is not visible unless the machine parameter **CfgPgmMgt/dependentFiles** is set to **MANUAL**. The generated tool usage file contains the following information:

Column	Meaning
TOKEN	■ **TOOL**: Tool usage time per **TOOL CALL**. The entries are listed in chronological order. ■ **TTOTAL**: Total usage time of a tool ■ **STOTAL**: Call of a subprogram; the entries are listed in chronological order ■ **TIMETOTAL**: The total machining time of the NC program is entered in the **WTIME** column. In the **PATH** column the TNC saves the path name of the corresponding NC programs. The **TIME** column shows the sum of all **TIME** entries (feed time without rapid traverse movements). The TNC sets all other columns to 0 ■ **TOOLFILE**: In the **PATH** column, the TNC saves the path name of the tool table with which you conducted the test run. This enables the TNC during the actual tool usage test to detect whether you performed the test run with the TOOL.T
TNR	Tool number (**-1**: No tool inserted yet)
IDX	Tool index
TIME	Tool-usage time in seconds (feed time without rapid traverse movements)
WTIME	Tool-usage time in seconds (total usage time between tool changes)
RAD	**Tool radius R** + **Oversize of tool radius DR** from the tool table. (in mm)
BLOCK	Block number in which the **TOOL CALL** block was programmed
PATH	■ **TOKEN** = **TOOL**: Path name of the active main program or subprogram ■ **TOKEN** = **STOTAL**: Path name of the subprogram
T	Tool number with tool index
OVRMIN	Minimum feed rate override that occurred during machining. During Test Run the TNC enters the value –1
NAMEPROG	■ 0: The tool number is programmed ■ 1: The tool name is programmed

5.3 Tool compensation

Introduction

The TNC adjusts the spindle path in the spindle axis by the compensation value for the tool length. In the working plane, it compensates the tool radius.

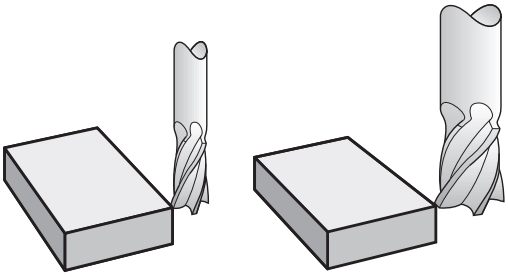

Tool length compensation

Length compensation becomes effective automatically as soon as a tool is called. To cancel length compensation, call a tool with the length L=0 (e.g. **TOOL CALL 0**).

For tool length compensation, the control takes the delta values from both the **TOOL CALL** block and the tool table into account.

Compensation value = **L** + **DL** $_{\text{TOOL CALL}}$ + **DL** $_{\text{TAB}}$ with

L:	Tool length **L** from **TOOL DEF** block or tool table
DL $_{\text{TOOL CALL}}$:	Oversize for length **DL** in the **TOOL CALL** block
DL $_{\text{TAB}}$:	Oversize for length **DL** in the tool table

Tool radius compensation with paraxial positioning blocks

The TNC can compensate the tool radius in the working plane with the aid of paraxial positioning blocks. You can enter the dimensions directly from the drawing without first having to convert the positions. The TNC extends or shortens the traverse path by the tool radius.

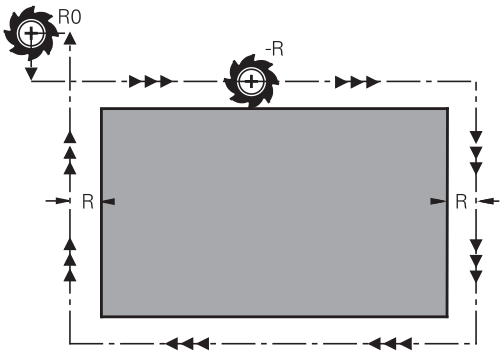

- **R+** extends the tool path by the tool radius
- **R-** shortens the tool path by the tool radius
- **R0** positions the tool using the tool center

The radius compensation is effective as soon as a tool is called and traversed with a paraxial movement in the working plane with **R +/R-**.

> Radius compensation is not effective for positioning movements in the spindle axis.
>
> The last selected radius compensation remains active in a positioning block that does not contain any information about radius compensation.

For radius compensation, the TNC takes the delta values from both the **TOOL CALL** block and the tool table into account:

Compensation value = **R** + $\mathbf{DR}_{\text{TOOL CALL}}$ + $\mathbf{DR}_{\text{TAB}}$ with

R:	Tool radius **R** from **TOOL DEF** block or tool table
$\mathbf{DR}_{\text{TOOL CALL}}$:	Oversize for radius **DR** in the **TOOL CALL** block
$\mathbf{DR}_{\text{TAB}}$:	Oversize for radius **DR** in the tool table

Contouring without radius compensation: R0

The tool center moves in the working plane along the to the programmed coordinates.

Applications: Drilling and boring, pre-positioning

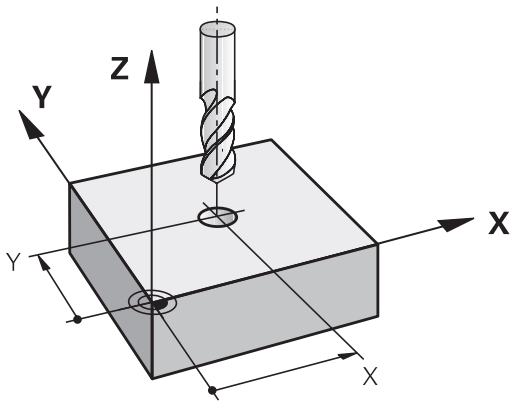

Entering radius compensation

Radius compensation is entered in a positioning block. Enter the coordinates of the target point and confirm your entry with **ENT**

TOOL RADIUS COMP: R+/R-/NO COMP?

R+
- The TNC extends the traverse path of the tool by the tool radius

R–
- The TNC shortens the traverse path of the tool by the tool radius

ENT
- Select tool movement without radius compensation or cancel radius compensation: Press the **ENT** key

END
- Terminate the block: Press the **END** key

6

Programming: Tool movements

6.1 Fundamentals

Tool movements in the program

The orange axis keys initiate the plain-language dialog for a paraxial positioning block. The TNC asks you successively for all the necessary information and inserts the program block into the part program.

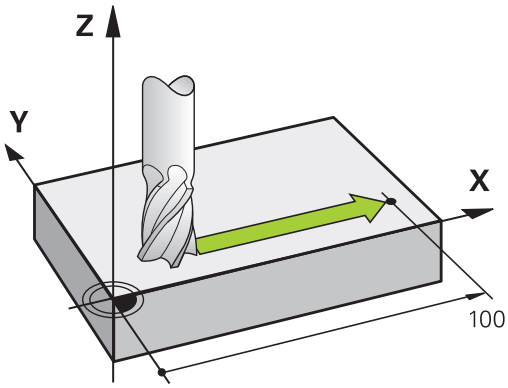

X

- **Coordinates** of the end point of the movement
- **Radius compensation R+/R-/R0**
- **Feed rate F**
- **Miscellaneous function M**

Example NC block

```
6 X+45 R+ F200 M3
```

You always program the direction of tool movement. Depending on the individual machine tool, the part program is executed by movement of either the tool or the machine table on which the workpiece is clamped.

> **!** **Danger of collision!**
> Before running a part program, always pre-position the tool to prevent the possibility of damaging it or the workpiece.

Radius compensation

The TNC can compensate the tool radius automatically. In paraxial positioning blocks you can select whether the TNC is to extend (R +) or shorten (R–) the traverse path by the value of the tool radius (see "Tool radius compensation with paraxial positioning blocks", page 172).

Miscellaneous functions M

With the TNC's miscellaneous functions you can affect

- the program run, e.g., a program interruption
- the machine functions, such as switching spindle rotation and coolant supply on and off

Subprograms and program section repeats

If a machining sequence occurs several times in a program, you can save time and reduce the chance of programming errors by entering the sequence once and then defining it as a subprogram or program section repeat. In addition, you can have a part program call a separate program for execution.

Programming with subprograms and program section repeats: see "Programming: Subprograms and program section repeats", page 185.

Programming with Q parameters

Instead of programming numerical values in a part program, you enter markers called Q parameters. You assign the values to the Q parameters separately with the Q parameter functions. You can use the Q parameters for programming mathematical functions that control program execution or describe a contour.

In addition, parametric programming enables you to measure with the 3-D touch probe during program run.

Programming with Q parameters: see " Programming: Q parameters", page 203.

6.2 Tool movements

Programming tool movements for workpiece machining

Creating the program blocks with the axis keys

Use the orange axis keys to initiate the plain-language dialog. The TNC asks you successively for all the necessary information and inserts the program block into the part program.

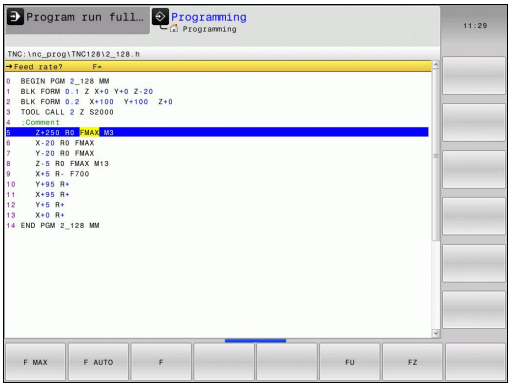

Example—programming a straight line

X

- Select the axis key you want to use for the positioning movement, e.g. **X**

COORDINATES?

- **10** Enter the coordinate of the end point, e.g. 10

ENT

- Press the **ENT** key

TOOL RADIUS COMP: R+/R-/NO COMP?

R0

- Select the radius compensation (here, press the **R0** soft key—the tool moves without compensation)

Feed rate F=? / F MAX = ENT

- **100** Enter the feed rate, e.g. 100 mm/min. (For programming in inches, enter 100 for a feed rate of 10 inches per minute)

ENT

- Confirm your entry with the **ENT** key, or

F MAX

- Move at rapid traverse: Press the **FMAX** soft key, or

F AUTO

- Traverse with the feed rate defined in the **TOOL CALL** block: Press the **F AUTO** soft key

MISCELLANEOUS FUNCTION M?

- Enter **3** (miscellaneous function **M3** "Spindle ON")

ENT

- The TNC ends this dialog with the **ENT** key

The program-block window displays the following line:

```
6 X+10 R0 FMAX M3
```

Capture actual position

You can also generate a positioning block by using the **ACTUAL-POSITION-CAPTURE** key:

- In the **Manual Operation** mode, move the tool to the position you want to capture
- Select the **Programming** mode of operation
- Select the program block after which you want to insert the block

- Press the **ACTUAL-POSITION-CAPTURE** key for the TNC to generate an block
- Select the desired axis, e.g. by pressing the **ACTL. POS. X** soft key: The TNC adopts the current position and ends the dialog

Example: Linear movement

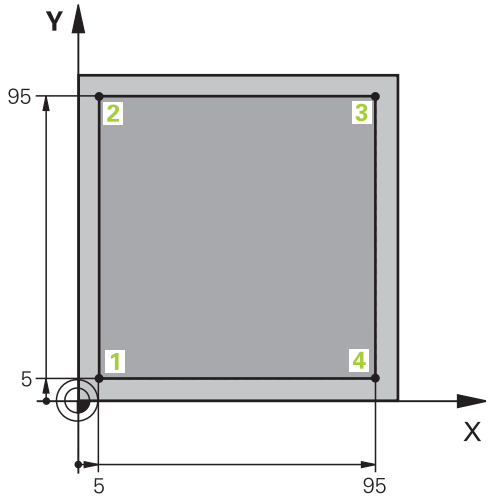

0 BEGIN PGM LINEAR MM	
1 BLK FORM 0.1 Z X+0 Y+0 Z-20	Define the workpiece blank for graphic workpiece simulation
2 BLK FORM 0.2 X+100 Y+100 Z+0	
3 TOOL CALL 1 Z S4000	Call the tool in the spindle axis and with the spindle speed S
4 Z+250 R0 FMAX	Retract the tool in the spindle axis at rapid traverse FMAX
5 X-10 R0 FMAX	Pre-position the tool
6 Y-10 R0 FMAX	Pre-position the tool
7 Z+2 R0 FMAX	Pre-position the tool
8 Z-5 R0 F1000 M13	Move to working depth at feed rate F = 1000 mm/min
9 X+5 R- F500	Contour approach
10 Y+95 R+	Move to point 2
11 X+95 R+	Move to point 3
12 Y+5 R+	Move to point 4
13 X-10 R0	Close the contour and retract
14 Z+250 R0 FMAX M30	Retract the tool, end program
16 END PGM LINEAR MM	

7

Programming: Data transfer from CAD files

7.1 CAD viewer and

CAD viewer and

If you open the CAD viewer , the following screen layout is displayed:

Screen display

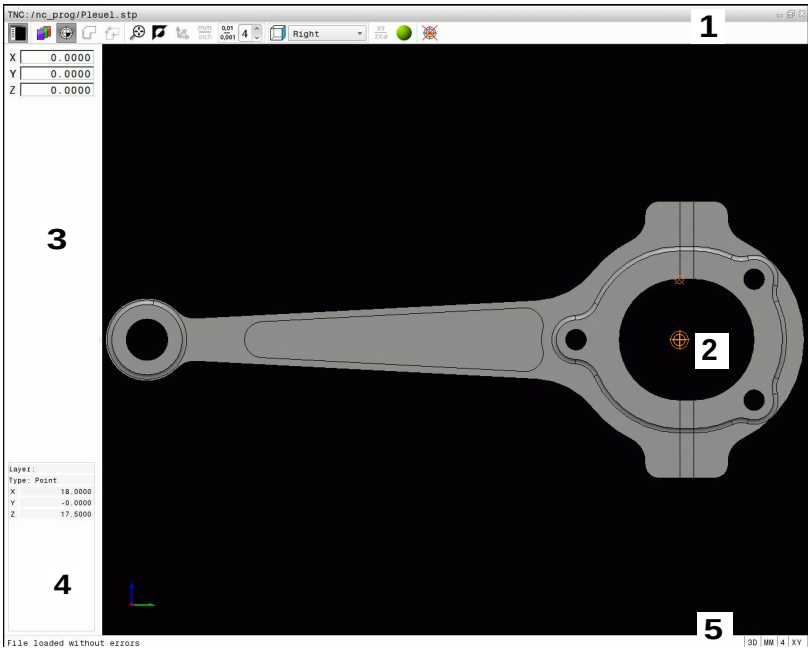

1 Header
2 Graphics window
3 List view window
4 Element information window
5 Footer

7.2 CAD viewer

Application

The CAD viewer allows you to open standardized CAD data formats directly on the TNC.

The TNC displays the following file formats:

Files	Type
Step files	.STP and .STEP
Iges files	.IGS and .IGES
DXF files	.DXF

The file can simply be selected via the file manager of the TNC, just like NC programs. This permits you to check quickly and simply for problems directly in the model.

You can position the datum anywhere in the model. In this way the coordinates of selected points can be displayed.

The following icons are available:

Icon	Setting
	Show or hide the list view window to enlarge the graphics window
	Display of the various layers
 	Set the datum or delete set datum
	Set the zoom to the largest possible view of the complete graphics
	Change the background color (black or white)
0,01 ... 0,001	Set resolution: The resolution specifies how many decimal places the TNC should use when generating the contour program. Default setting: 4 decimal places with **mm** and 5 decimal places with **inch**
	Switch between various perspectives in the drawing e.g. **Top**

8

Programming: Subprograms and program section repeats

8.1 Labeling subprograms and program section repeats

Subprograms and program section repeats enable you to program a machining sequence once and then run it as often as necessary.

Label

The beginnings of subprograms and program section repeats are marked in a part program by labels **(LBL)**.

A LABEL is identified by a number between 1 and 65535 or by a name you define. Each LABEL number or LABEL name can be set only once in the program with the **LABEL SET** key. The number of label names you can enter is only limited by the internal memory.

> ⇨ Do not use a label number or label name more than once!

Label 0 (**LBL 0**) is used exclusively to mark the end of a subprogram and can therefore be used as often as desired.

8.2 Subprograms

Operating sequence

1 The TNC executes the part program up to calling a subprogram, **CALL LBL**.
2 The subprogram is then executed from beginning to end, **LBL 0**.
3 The TNC then resumes the part program from the block after the subprogram call **CALL LBL**

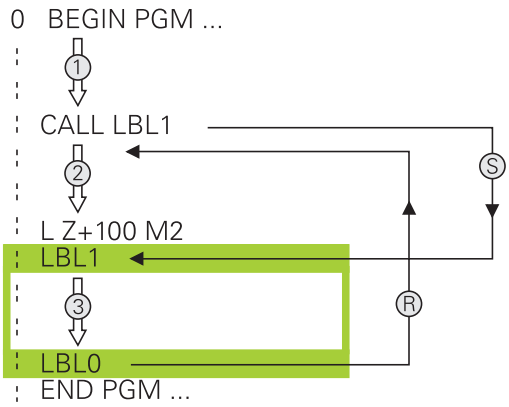

Programming notes

- A main program can contain any number of subprograms
- You can call subprograms in any sequence and as often as desired
- A subprogram cannot call itself
- Write subprograms after the block with M2 or M30
- If subprograms are located before the block with M2 or M30 in the part program, they will be executed at least once even if they are not called

Programming a subprogram

LBL SET

- To mark the beginning, press the LBL SET key
- Enter the subprogram number. If you want to use a label name, press the **LBL NAME** soft key to switch to text entry
- To mark the end, press the LBL SET key and enter the label number "0"

Calling a subprogram

LBL CALL

- Call a subprogram: Press the **LBL CALL** key
- Enter the subprogram number of the subprogram you wish to call. If you want to use a label name, press the **LBL NAME** soft key to switch to text entry.
- If you want to enter the number of a string parameter as target address, press the QS soft key. The TNC will then jump to the label name that is specified in the defined string parameter
- Ignore repeats **REP** by pressing the **NO ENT** key. Repeat **REP** is used only for program section repeats

CALL LBL 0 is not permitted as it is only used to call the end of a subprogram.

8.3 Program-section repeats

Label

The beginning of a program section repeat is marked by the label **LBL**. The end of a program section repeat is identified by **CALL LBL n REPn**.

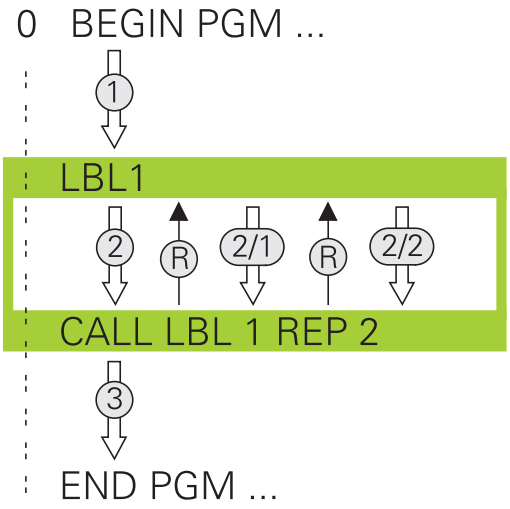

Operating sequence

1 The TNC executes the part program up to the end of the program section (**CALL LBL n REPn**)
2 Then the program section between the called LABEL and the label call **CALL LBL n REPn** is repeated the number of times entered after **REP**
3 The TNC resumes the part program after the last repetition

Programming notes

- You can repeat a program section up to 65 534 times in succession
- The total number of times the program section is executed is always one more than the programmed number of repeats, because the first repeat starts after the first machining process.

Programming a program section repeat

LBL SET

- To mark the beginning, press the **LBL SET** key and enter a LABEL NUMBER for the program section you wish to repeat. If you want to use a label name, press the **LBL NAME** soft key to switch to text entry
- Enter the program section

Calling a program section repeat

LBL CALL

- Call a program section: Press the **LBL CALL** key
- Enter the number of the program section to be repeated. If you want to use a label name, press the **LBL NAME** soft key to switch to text entry.
- Enter the number of repeats **REP** and confirm with the **ENT** key.

8.4 Any desired program as subprogram

Overview of the soft keys

If the **PGM CALL** key is pressed, the TNC displays the following soft keys:

Soft key	Function
CALL PROGRAM	Call a program with **PGM CALL**
SELECT DATUM TABLE	Select a datum table with **SEL TABLE**
SELECT POINT TABLE	Select a point table with **SEL PATTERN**
SELECT PROGRAM	Select a program with **SEL PGM**
CALL SELECTED PROGRAM	Select last selected file with **CALL SELECTED PGM**

8.4 Any desired program as subprogram

Operating sequence

1 The TNC executes the part program up to the block in which another program is called with **CALL PGM**
2 Then the other part program is run from beginning to end
3 The TNC then resumes the first part program (i.e. the calling program) with the block after the program call

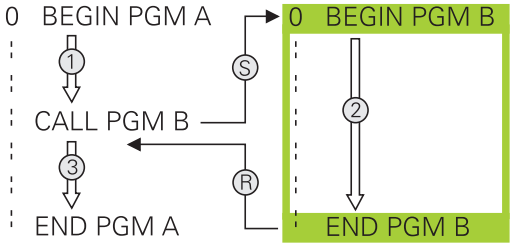

Programming notes

- The TNC does not need any labels to call any part program
- The called program must not contain the miscellaneous functions **M2** or **M30**. If you have defined subprograms with labels in the called part program, you then need to replace M2 or M30 with the **FN 9: IF +0 EQU +0 GOTO LBL 99** jump function to force a jump over this program section
- The called part program must not contain a **CALL PGM** call into the calling part program, otherwise an infinite loop will result

Calling any program as a subprogram

Danger of collision!

Coordinate transformations that you define in the called program remain in effect for the calling program too, unless you reset them.

If the program you want to call is located in the same directory as the program you are calling it from, then you only need to enter the program name.

If the called program is not located in the same directory as the program you are calling it from, you must enter the complete path, e.g. **TNC:\ZW35\ROUGH\PGM1.H**

You can also call a program with Cycle **12 PGM CALL**.

As a rule, Q parameters are effective globally with a **PGM CALL**. So please note that changes to Q parameters in the called program also influence the calling program.

Call a program with PGM CALL

The **PGM CALL** function calls any program as a subprogram. The control runs the called program from the position where it was called in the program.

PGM CALL

- To select the functions for program call, press the **PGM CALL** key

CALL PROGRAM

- Press the **CALL PROGRAM** soft key for the TNC to start the dialog for defining the program to be called. Enter the path name with the keyboard, or

SELECT FILE

- press the **SELECT FILE** soft key for the TNC to display a selection window in which you can select the program to be called. Confirm with the **END** key

Call with SEL PGM and CALL SELECTED PGM

Use the function **SEL PGM** to select any program as a subprogram and call it at another position in the program. The control runs the called program from the position where it was called in the program with **CALL SELECTED PGM**.

The **SEL PGM** function is also permitted with string parameters, so that you can dynamically control program calls.

To select the program, proceed as follows:

PGM CALL

- To select the functions for program call, press the **PGM CALL** key

SELECT PROGRAM

- Press the **SELECT PROGRAM** soft key for the TNC to start the dialog for defining the program to be called.

SELECT FILE

- press the **SELECT FILE** soft key for the TNC to display a selection window in which you can select the program to be called. Confirm with the **END** key

To call the selected program, proceed as follows:

PGM CALL

- To select the functions for program call, press the **PGM CALL** key

CALL SELECTED PROGRAM

- Press the **CALL SELECTED PROGRAM** soft key for the TNC to call the previously selected program with **CALL SELECTED PGM**

8.5 Nesting

Types of nesting

- Subprogram calls in subprograms
- Program section repeats within a program section repeat
- Subprogram calls in program section repeats
- Program section repeats in subprograms

Nesting depth

The nesting depth is the number of successive levels in which program sections or subprograms can call further program sections or subprograms.

- Maximum nesting depth for subprograms: 19
- Maximum nesting depth for main program calls: 19, where a **CYCL CALL** acts like a main program call
- You can nest program section repeats as often as desired

Subprogram within a subprogram

Example NC blocks

0 BEGIN PGM UPGMS MM	
...	
17 CALL LBL “SP1“	Call the subprogram marked with LBL SP1
...	
35 Z+100 R0 FMAX M2	Last program block of the main program with M2
36 LBL “SP1“	Beginning of subprogram SP1
...	
39 CALL LBL 2	Call the subprogram marked with LBL 2
...	
45 LBL 0	End of subprogram 1
46 LBL 2	Beginning of subprogram 2
...	
62 LBL 0	End of subprogram 2
63 END PGM UPGMS MM	

Program execution

1 Main program UPGMS is executed up to block 17.
2 Subprogram SP1 is called, and executed up to block 39.
3 Subprogram 2 is called, and executed up to block 62. End of subprogram 2 and return jump to the subprogram from which it was called.
4 Subprogram 1 is called, and executed from block 40 up to block 45. End of subprogram 1 and return jump to the main program UPGMS.
5 Main program UPGMS is executed from block 18 up to block 35. Return jump to block 1 and end of program.

Repeating program section repeats

Example NC blocks

0 BEGIN PGM REPS MM	
...	
15 LBL 1	Beginning of program section repeat 1
...	
20 LBL 2	Beginning of program section repeat 2
...	
27 CALL LBL 2 REP 2	Program section call with two repeats
...	
35 CALL LBL 1 REP 1	The program section between this block and LBL 1
...	(block 15) is repeated once
50 END PGM REPS MM	

Program execution

1 Main program REPS is executed up to block 27.
2 Program section between block 27 and block 20 is repeated twice.
3 Main program REPS is executed from block 28 to block 35.
4 Program section between block 35 and block 15 is repeated once (including the program section repeat between 20 and block 27).
5 Main program REPS is executed from block 36 to block 50. Return jump to block 1 and end of program

Repeating a subprogram

Example NC blocks

0 BEGIN PGM UPGREP MM	
...	
10 LBL 1	Beginning of program section repeat 1
11 CALL LBL 2	Subprogram call
12 CALL LBL 1 REP 2	Program section call with two repeats
...	
19 Z+100 R0 FMAX M2	Last block of the main program with M2
20 LBL 2	Beginning of subprogram
...	
28 LBL 0	End of subprogram
29 END PGM UPGREP MM	

Program execution

1 Main program UPGREP is executed up to block 11.
2 Subprogram 2 is called and executed.
3 Program section between block 12 and block 10 is repeated twice. This means that subprogram 2 is repeated twice.
4 Main program UPGREP is executed from block 13 up to block 19. Return jump to block 1 and end of program

8.6 Programming examples

Example: Groups of holes

Program sequence:

- Approach the groups of holes in the main program
- Call the group of holes (subprogram 1) in the main program
- Program the group of holes only once in subprogram 1

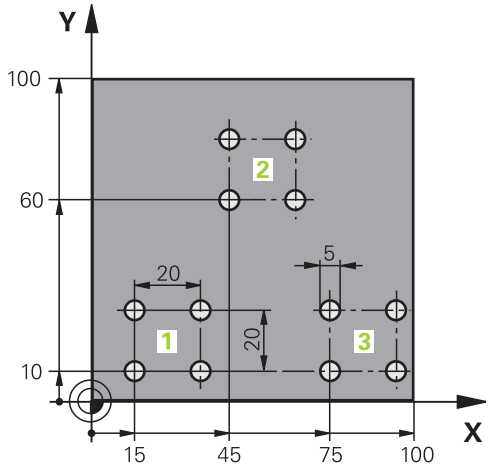

0 BEGIN PGM SP2 MM	
1 BLK FORM 0.1 Z X+0 Y+0 Z-20	
2 BLK FORM 0.2 X+100 Y+100 Z+0	
3 TOOL CALL 1 Z S3000	Tool call
4 Z+250 R0 FMAX M3	
5 CYCL DEF 200 DRILLING	Cycle definition: drilling
Q200=+2 ;SET-UP CLEARANCE	
Q201=-20 ;DEPTH	
Q206=+150 ;FEED RATE FOR PLNGNG	
Q202=+5 ;PLUNGING DEPTH	
Q210=+0 ;DWELL TIME AT TOP	
Q203=+0 ;SURFACE COORDINATE	
Q204=+50 ;2ND SET-UP CLEARANCE	
Q211=+0 ;DWELL TIME AT BOTTOM	
Q395=+0 ;DEPTH REFERENCE	
6 CYCL DEF 7.0 DATUM SHIFT	Datum shift
7 CYCL DEF 7.1 X+15	
8 CYCL DEF 7.2 Y+10	
9 CALL LBL 1	
10 CYCL DEF 7.0 DATUM SHIFT	Datum shift
11 CYCL DEF 7.1 X+75	
12 CYCL DEF 7.2 Y+10	
13 CALL LBL 1	
14 CYCL DEF 7.0 DATUM SHIFT	Datum shift
15 CYCL DEF 7.1 X+45	
16 CYCL DEF 7.2 Y+60	
17 CALL LBL 1	

18 CYCL DEF 7.0 DATUM SHIFT	
19 CYCL DEF 7.1 X+0	
20 CYCL DEF 7.2 Y+0	
21 Z+100 R0 FMAX M30	
22 LBL 1	
23 X+0 R0 FMAX	
24 Y+0 R0 FMAX M99	Move to 1st hole, call cycle
25 X+20 R0 FMAX M99	Move to 2nd hole, call cycle
26 Y+20 R0 FMAX M99	Move to 3rd hole, call cycle
27 X-20 R0 FMAX M99	Move to 4th hole, call cycle
28 LBL 0	
29 END PGM SP2 MM	

Example: Group of holes with several tools

Program sequence:

- Program the fixed cycles in the main program
- Call the complete hole pattern (subprogram 1) in the main program
- Approach the groups of holes (subprogram 2) in subprogram 1
- Program the group of holes only once in subprogram 2

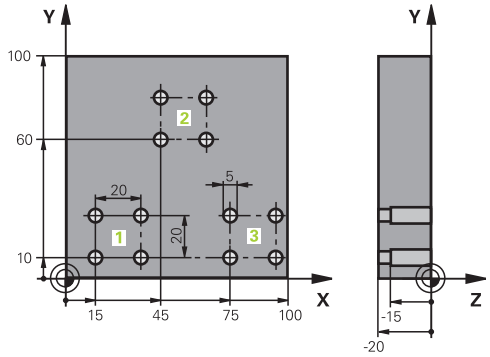

0 BEGIN PGM SP2 MM	
1 BLK FORM 0.1 Z X+0 Y+0 Z-20	
2 BLK FORM 0.2 X+100 Y+100 Z+0	
3 TOOL CALL 1 Z S5000	Centering drill tool call
4 Z+250 R0 FMAX	Retract the tool
5 CYCL DEF 200	Cycle definition: CENTERING
Q200=2 ;	
Q201=-3 ;	
Q206=250 ;FEED RATE FOR PLNGNG	
Q202=3 ;	
Q210=0 ;	
Q203=+0 ;SURFACE COORDINATE	
Q204=10 ;	
Q211=0.25 ;	
Q395=0 ;DEPTH REFERENCE	
6 CALL LBL 1	Call subprogram 1 for the entire hole pattern
7 Z+250 R0 FMAX M6	Tool change
8 TOOL CALL 2 Z S4000	Drill tool call
9 FN 0: Q201 = -25	New depth for drilling
10 FN 0: Q202 = +5	New plunging depth for drilling
11 CALL LBL 1	Call subprogram 1 for the entire hole pattern
12 Z+250 R0 FMAX M6	Tool change
13 TOOL CALL 3 Z S500	Reamer tool call

14 CYCL DEF 201 REAMING	Cycle definition: REAMING
Q200=2 ;SET-UP CLEARANCE	
Q201=-15 ;DEPTH	
Q206=250 ;FEED RATE FOR PLNGNG.	
Q211=0.5 ;DWELL TIME AT DEPTH	
Q208=400 ;RETRACTION FEED RATE	
Q203=+0 ;SURFACE COORDINATE	
Q204=10 ;2ND SET-UP CLEARANCE	
15 CALL LBL 1	Call subprogram 1 for the entire hole pattern
16 Z+250 R0 FMAX M2	End of main program
17 LBL 1	Beginning of subprogram 1: Entire hole pattern
18 X+15 R0 FMAX M3	Move to starting point X for hole group 1
19 Y+10 R0 FMAX M3	Move to starting point Y for hole group 1
20 CALL LBL 2	Call subprogram 2 for the hole group
21 X+45 R0 FMAX	Move to starting point X for hole group 2
22 Y+60 R0 FMAX	Move to starting point Y for hole group 2
23 CALL LBL 2	Call subprogram 2 for the hole group
24 X+75 R0 FMAX	Move to starting point X for hole group 3
25 Y+10 R0 FMAX	Move to starting point Y for hole group 3
26 CALL LBL 2	Call subprogram 2 for the hole group
27 LBL 0	End of subprogram 1
28 LBL 2	Beginning of subprogram 2: Group of holes
29 CYCL CALL	1st hole with active fixed cycle
30 IX+20 R0 FMAX M99	Move to 2nd hole, call cycle
31 IY+20 R0 FMAX M99	Move to 3rd hole, call cycle
32 IX-20 R0 FMAX M99	Move to 4th hole, call cycle
33 LBL 0	End of subprogram 2
34 END PGM SP2 MM	

9

Programming: Q parameters

9.1 Principle and overview of functions

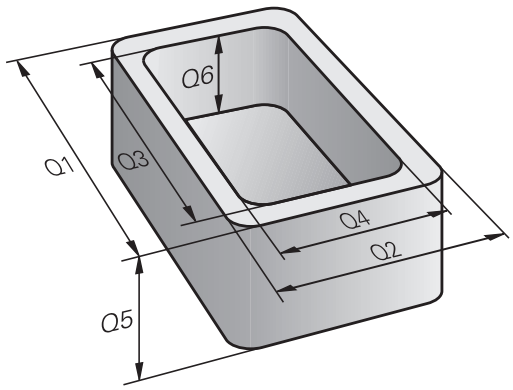

With parameters you can program entire families of parts in a single part program, by programming variable parameters instead of fixed numerical values.

Use parameters for e.g.:

- Coordinate values
- Feed rates
- Spindle speeds
- Cycle data

With parameters you can also:

- Program contours that are defined through mathematical functions
- Make execution of machining steps depend on certain logical conditions

Parameters are always identified with letters and numbers. The letters determine the type of parameter and the numbers the parameter range.

See the table below for detailed information:

Parameter type	Parameter range	Meaning
Q parameters:		**Parameters effect all programs in the TNC memory**
	0 - 30	Parameters for HEIDENHAIN cycles
	31 - 99	Parameters for **users**
	100 - 199	Parameters for special TNC functions
	200 - 1199	Parameters for HEIDENHAIN cycles
	1200 - 1399	Parameters for cycles of machine tool builder or third party provider
	1400 - 1499	Parameters for CALL-active cycles of machine tool builder or third party provider
	1500 - 1599	Parameters for DEF-active cycles of machine tool builder or third party provider
	1600 - 1999	Parameters for **users**
QL parameters		**Parameters only effective locally within a program**
	0 - 499	Parameters for **users**
QR parameters		**Parameters that are nonvolatile on all programs in the TNC memory, i.e. they remain in effect even after a power interruption**
	0 - 499	Parameters for **users**

QS parameters (the **S** stands for string) are also available on the TNC and enable you to process texts.

Parameter type	Parameter range	Meaning
QS parameters		**Parameters effect all programs in the TNC memory**
	0 - 99	Parameters for **users**
	100 - 199	Parameters for system information on the TNC that can be read by the NC programs of the user or by cycles
	200 - 1199	Parameters for HEIDENHAIN cycles
	1200 - 1399	Parameters providing feedback to the user's NC program with cycles of the machine tool builder or a third party provider
	1400 - 1599	Parameters for cycles of machine tool builder or third party provider
	1600 - 1999	Parameters for **users**

You gain maximum safety for your applications by using only parameter ranges recommended for the user in your NC programs.

Please note that the specified use of the parameter ranges is recommended by HEIDENHAIN but cannot be ensured.

Machine tool builder or third party functions may still cause overlaps with the user's NC program. In this regard, please observe the machine manual or third-party documentation.

Programming: Q parameters

9.1 Principle and overview of functions

Programming notes

You can mix Q parameters and fixed numerical values within a program.

Q parameters can be assigned numerical values between –999 999 999 and +999 999 999. The input range is limited to 16 digits, of which 9 may be before the decimal point. Internally the TNC calculates numbers up to a value of 10^{10}.

You can assign a maximum of 255 characters to **QS** parameters.

The TNC always assigns some Q and QS parameters the same data. For example the Q parameter **Q108** is always assigned the current tool radius, see " Preassigned Q parameters", page 262.

The TNC saves numerical values internally in a binary number format (standard IEEE 754). Due to this standardized format some decimal numbers do not have an exact binary representation (round-off error). Keep this in mind especially when you use calculated Q-parameter contents for jump commands or positioning movements.

Calling Q parameter functions

When you are writing a part program, press the "Q" key (in the numeric keypad for numerical input and axis selection, below the **+/-**). The TNC then displays the following soft keys:

Soft key	Function group	Page
BASIC ARITHM.	Basic arithmetic (assign, add, subtract, multiply, divide, square root)	209
TRIGO-NOMETRY	Trigonometric functions	211
CIRCLE CALCU-LATION	Function for calculating circles	212
JUMP	If/then conditions, jumps	213
DIVERSE FUNCTION	Other functions	217
FORMULA	Entering formulas in the part program	247

The TNC shows the soft keys Q, QL and QR when you are defining or assigning a Q parameter. First press one of these soft keys to select the desired type of parameter, and then enter the parameter number.

If you have a USB keyboard connected, you can press the Q key to open the dialog for entering a formula.

9.2 Part families—Q parameters in place of numerical values

Application

The Q parameter function **FN 0: ASSIGN** assigns numerical values to Q parameters. This enables you to use variables in the program instead of fixed numerical values.

Example NC blocks

15 FN O: Q10=25	Assign
...	Q10 is assigned the value 25
25 X +Q10	Means X +25

You need write only one program for a whole family of parts, entering the characteristic dimensions as Q parameters.

To program a particular part, you then assign the appropriate values to the individual Q parameters.

Example: Cylinder with Q parameters

Cylinder radius:	R = Q1
Cylinder height:	H = Q2
Cylinder Z1:	Q1 = +30 Q2 = +10
Cylinder Z2:	Q1 = +10 Q2 = +50

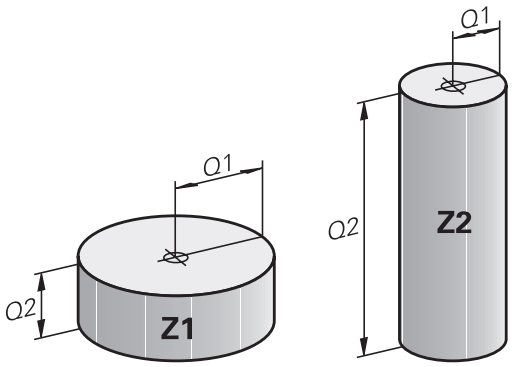

9.3 Describing contours with mathematical functions

Application

The Q parameters listed below enable you to program basic mathematical functions in a part program:

- Select a Q-parameter function: Press the Q key (in the numerical keypad at right). The Q-parameter functions are displayed in a soft-key row
- Select the mathematical functions: Press the **BASIC ARITHMETIC** soft key. The TNC then displays the following soft keys:

Overview

Soft key	Function
FN0 X = Y	**FN 0**: ASSIGN e.g. **FN 0: Q5 = +60** Directly assign value
FN1 X + Y	**FN 1**: ADDITION e.g. **FN 1: Q1 = -Q2 + -5** Form and assign sum from two values
FN2 X - Y	**FN 2**: SUBTRACTION e.g. **FN 2: Q1 = +10 - +5** Form and assign difference between two values
FN3 X * Y	**FN 3**: MULTIPLICATION e.g. **FN 3: Q2 = +3 * +3** Form and assign the product of two values
FN4 X / Y	**FN 4**: DIVISION e.g. **FN 4: Q4 = +8 DIV +Q2** Form and assign the quotient of two values **Not permitted:** Division by 0
FN5 SQRT	**FN 5**: SQUARE ROOT e.g. **FN 5: Q20 = SQRT 4** Form and assign the square root of a value **Not permitted:** Square root from negative value

To the right of the "=" character you can enter the following:

- Two numbers
- Two Q parameters
- A number and a Q parameter

The Q parameters and numerical values in the equations can be entered with positive or negative signs.

Programming fundamental operations

Example 1

Q

- Select the Q parameter functions: Press the **Q** key

BASIC ARITHM.

- Select the mathematical functions: Press the **BASIC ARITHMETIC** soft key

FN0 X = Y

- Select the Q parameter function ASSIGN: Press the **FN0 X = Y** soft key

PARAMETER NUMBER FOR RESULT?

ENT

- **12** Enter the Q parameter number and confirm with the **ENT** key

FIRST VALUE / PARAMETER?

ENT

- Enter **10**: Assign the numerical value 10 to Q5 and confirm with the **ENT** soft key.

Program blocks in the TNC

```
16 FN 0: Q5 = +10
17 FN 3: Q12 = +Q5 * +7
```

Example 2

Q

- Select the Q parameter functions: Press the **Q** key

BASIC ARITHM.

- Select the mathematical functions: Press the **BASIC ARITHMETIC** soft key

FN3 X * Y

- To select the Q parameter function MULTIPLICATION, press the **FN3 X * Y** soft key

PARAMETER NUMBER FOR RESULT?

ENT

- **12** Enter the Q parameter number and confirm with the **ENT** key

FIRST VALUE / PARAMETER?

ENT

- Enter **Q5** as the first value and confirm with the **ENT** key.

SECOND VALUE / PARAMETER?

ENT

- Enter **7** as the second value and confirm with the **ENT** key.

9.4 Angle functions

Definitions

Sine: sin α = a / c
Cosine: cos α = b / c
Tangent: tan α = a / b = sin α / cos α

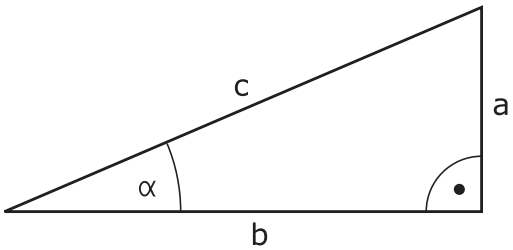

where

- c is the side opposite the right angle
- a is the side opposite the angle α
- b is the third side.

The TNC can find the angle from the tangent:

α = arctan (a / b) = arctan (sin α / cos α)

Example:

a = 25 mm

b = 50 mm

α = arctan (a / b) = arctan 0.5 = 26.57°

Furthermore:

$a^2 + b^2 = c^2$ (where $a^2 = a \times a$)

$c = \sqrt{(a^2 + b^2)}$

Programming trigonometric functions

Press the soft key to call the trigonometric functions. The TNC then displays the soft keys that are listed in the table below.

Soft key	Function
FN6 SIN(X)	**FN 6**: SINUS e. g. **FN 6: Q20 = SIN-Q5** Define and assign the sinus of an angle in degrees (°)
D7 COS(X)	**FN 7**: COSINUS e. g. **FN 7: Q21 = COS-Q5** Define and assign the cosine of an angle in degrees (°)
FN8 X LEN Y	**FN 8**: ROOT SUM OF SQUARES e. g. **FN 8: Q10 = +5 LEN +4** Form and assign length from two values
FN13 X ANG Y	**FN 13**: ANGLE e. g. **FN 13: Q20 = +25 ANG-Q1** Calculate the angle from the arc tangent of two sides or from the sine and cosine of the angle (0 < angle < 360°) and assign it to a parameter

9.5 Calculation of circles

Application

The TNC can use the functions for calculating circles to calculate the circle center and the circle radius from three or four given points on the circle. The calculation is more accurate if four points are used.

Application: These functions can be used if you wish to determine the location and size of a hole or a pitch circle using the programmable probing function.

Soft key	Function
FN23 3 POINTS OF CIRCLE	FN 23: Determining the CIRCLE DATA from three points e. g. **FN 23: Q20 = CDATA Q30**

The coordinate pairs of three points on a circle must be saved in Q30 and the following five parameters—in this case, up to Q35.

The TNC then saves the circle center in the reference axis (X if spindle axis is Z) in parameter Q20, the circle center in the minor axis (Y if spindle axis is Z) in parameter Q21, and the circle radius in parameter Q22.

Soft key	Function
FN24 4 POINTS OF CIRCLE	FN 24: Determining the CIRCLE DATA from four points e. g. **FN 24: Q20 = CDATA Q30**

The coordinate pairs of four points on a circle must be saved in Q30 and the following seven parameters—in this case, up to Q37.

The TNC then saves the circle center in the reference axis (X if spindle axis is Z) in parameter Q20, the circle center in the minor axis (Y if spindle axis is Z) in parameter Q21, and the circle radius in parameter Q22.

Note that **FN 23** and **FN 24** automatically overwrite the resulting parameter and the two following parameters.

9.6 If-then decisions with Q parameters

Application

The TNC can make logical if-then decisions by comparing a Q parameter with another Q parameter or with a numerical value. If the condition is fulfilled, the TNC continues the program at the label that is programmed after the condition (for information on labels, see "Labeling subprograms and program section repeats", page 186). If it is not fulfilled, the TNC continues with the next block.

To call another program as a subprogram, enter a **PGM CALL** program call after the block with the target label.

Unconditional jumps

An unconditional jump is programmed by entering a conditional jump whose condition is always true. Example:

FN 9: IF+10 EQU+10 GOTO LBL1

Abbreviations used:

IF	:	If
EQU	:	Equal to
NE	:	Not equal to
GT	:	Greater than
LT	:	Less than
GOTO	:	Go to
UNDEFINED	:	Undefined
DEFINED	:	Defined

Programming if-then decisions

Press the JUMP soft key to call the if-then conditions. The TNC then displays the following soft keys:

Soft key	Function
FN9 IF X EQ Y GOTO EQU	**FN 9**: IF EQUAL, JUMP e. g. **FN 9: IF +Q1 EQU +Q3 GOTO LBL "UPCAN25"** If both values or parameters are equal, jump to specified label
FN9 IF X EQ Y GOTO IS UNDEFINED	**FN 9**: IF UNDEFINED, JUMP e. g. **FN 9: IF +Q1 IS UNDEFINED GOTO LBL "UPCAN25"** If the given parameter is undefined, jump to the specified label
FN9 IF X EQ Y GOTO IS DEFINED	**FN 9**: IF DEFINED, JUMP e. g. **FN 9: IF +Q1 IS DEFINED GOTO LBL "UPCAN25"** If the given parameter is defined, jump to the specified label
FN10 IF X NE Y GOTO	**FN 10**: IF UNEQUAL, JUMP e. g. **FN 10: IF +10 NE -Q5 GOTO LBL 10** If both values or parameters are unequal, jump to specified label
FN11 IF X GT Y GOTO	**FN 11**: IF GREATER, JUMP g. g. **FN 11: IF+Q1 GT+10 GOTO LBL 5** If the first value or parameter is greater than the second value or parameter, jump to specified label
FN12 IF X LT Y GOTO	**FN 12**: IF LESS, JUMP e. g. **FN 12: IF+Q5 LT+0 GOTO LBL "ANYNAME"** If the first value or parameter is smaller than the second value or parameter, jump to specified label

9.7 Checking and changing Q parameters

Procedure

You can check Q parameters in all operating modes, and also edit them.

- If you are in a program run, interrupt it if required (for example, by pressing the machine STOP button and the soft key). If you are in a test run, interrupt it.

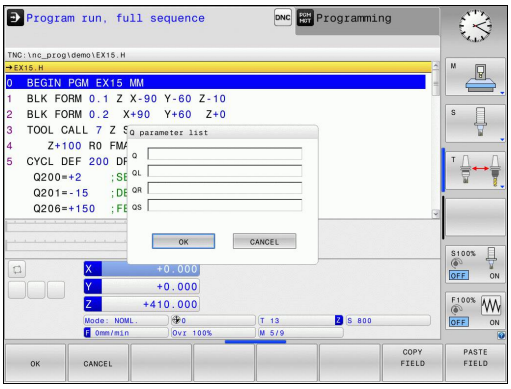

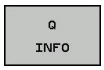

- To call the Q parameter functions, press the **Q INFO** soft key or the **Q** key
- The TNC lists all parameters and their current values. Use the arrow keys or the **GOTO** key to select the desired parameter.
- If you would like to change the value, press the soft key, enter the new value, and confirm with the **ENT** key.
- To leave the value unchanged, press the soft key or end the dialog with the **END** key.

> The parameters used by the TNC internally or in cycles are provided with comments.
>
> If you want to check or edit local, global or string parameters, press the **SHOW PARAMETERS Q QL QR QS** soft key. The TNC then displays the specific parameter type. The functions previously described also apply.

9.7 Checking and changing Q parameters

You can have the Q parameters be shown in the additional status display in all operating modes (except for the **Programming** operating mode).

- If you are in a program run, interrupt it if required (for example, by pressing the machine STOP button and the soft key). If you are in a test run, interrupt it.

- Call the soft-key row for screen layout

- Select the screen layout with additional status display: In the right half of the screen, the TNC shows the **Overview** status form

- Press the **STATUS OF Q PARAM.** soft key

- Press the **Q PARAMETER LIST** soft key: The TNC opens a pop-up window
- For each parameter type (Q, QL, QR, QS), define the parameter numbers you wish to control. Separate single Q parameters with a comma, and connect sequential Q parameters with a hyphen, e.g. 1,3,200-208. The input range per parameter type is 132 characters.

The display in the **QPARA** tab always contains eight decimal places. The result of Q1 = COS89.999 is shown by the control as 0.00001745 for example. Very large or very small values are displayed by the control in exponential notation. The result of Q1 = COS 89.999 * 0.001 is shown by the control as +1.74532925e-08, whereby e-08 corresponds to the factor of 10^{-8}.

9.8 Additional functions

Overview

Press the **DIVERSE FUNCTION** soft key to call the additional functions. The TNC then displays the following soft keys:

Soft key	Function	Page
FN14 ERROR=	**FN 14: ERROR** Display error messages	218
FN16 F-PRINT	**FN 16: F-PRINT** Formatted output of texts or Q parameter values	222
FN18 SYS-DATUM READ	**FN 18: SYSREAD** Read system data	226
FN19 PLC=	**FN 19: PLC** Transfer values to the PLC	235
FN20 WAIT FOR	**FN 20: WAIT FOR** NC and PLC synchronization	235
FN29 PLC LIST=	**FN 29: PLC** Transfer up to eight values to the PLC	236
FN37 EXPORT	**FN 37: EXPORT** Export local Q parameters or QS parameters into a calling program	236
FN26 OPEN TABLE	**FN 26: TABOPEN** Open a freely definable table	282
FN27 WRITE TO TABLE	**FN 27: TABWRITE** Write to a freely definable table	283
FN28 READ FROM TABLE	**FN 28: TABREAD** Read from a freely definable table	284

FN 14: ERROR: Displaying error messages

With the function **FN 14: ERROR** you can call messages under program control. The messages are predefined by the machine tool builder or by HEIDENHAIN. Whenever the TNC comes to a block with **FN 14: ERROR** in the Program Run or Test Run mode, it interrupts the program run and displays a message. The program must then be restarted. The error numbers are listed in the table.

Range of error numbers	Standard dialog text
0 ... 999	Machine-dependent dialog
1000 ... 1199	Internal error messages (see table)

Example NC block

The TNC is to display the text stored under error number 1000:

```
180 FN 14: ERROR = 1000
```

Error message predefined by HEIDENHAIN

Error number	Text
1000	Spindle?
1001	Tool axis is missing
1002	Tool radius too small
1003	Tool radius too large
1004	Range exceeded
1005	Start position incorrect
1006	ROTATION not permitted
1007	SCALING FACTOR not permitted
1008	MIRROR IMAGE not permitted
1009	Datum shift not permitted
1010	Feed rate is missing
1011	Input value incorrect
1012	Incorrect sign
1013	Entered angle not permitted
1014	Touch point inaccessible
1015	Too many points
1016	Contradictory input
1017	CYCL incomplete
1018	Plane wrongly defined
1019	Wrong axis programmed
1020	Wrong rpm
1021	Radius comp. undefined
1022	Rounding-off undefined
1023	Rounding radius too large
1024	Program start undefined

Error number	Text
1025	Excessive nesting
1026	Angle reference missing
1027	No fixed cycle defined
1028	Slot width too small
1029	Pocket too small
1030	Q202 not defined
1031	Q205 not defined
1032	Q218 must be greater than Q219
1033	CYCL 210 not permitted
1034	CYCL 211 not permitted
1035	Q220 too large
1036	Q222 must be greater than Q223
1037	Q244 must be greater than 0
1038	Q245 must not equal Q246
1039	Angle range must be under 360°
1040	Q223 must be greater than Q222
1041	Q214: 0 not permitted
1042	Traverse direction not defined
1043	No datum table active
1044	Position error: center in axis 1
1045	Position error: center in axis 2
1046	Hole diameter too small
1047	Hole diameter too large
1048	Stud diameter too small
1049	Stud diameter too large
1050	Pocket too small: rework axis 1
1051	Pocket too small: rework axis 2
1052	Pocket too large: scrap axis 1
1053	Pocket too large: scrap axis 2
1054	Stud too small: scrap axis 1
1055	Stud too small: scrap axis 2
1056	Stud too large: rework axis 1
1057	Stud too large: rework axis 2
1058	TCHPROBE 425: length exceeds max
1059	TCHPROBE 425: length below min
1060	TCHPROBE 426: length exceeds max
1061	TCHPROBE 426: length below min
1062	TCHPROBE 430: diameter too large
1063	TCHPROBE 430: diameter too small

Error number	Text
1064	No measuring axis defined
1065	Tool breakage tolerance exceeded
1066	Enter Q247 unequal to 0
1067	Enter Q247 greater than 5
1068	Datum table?
1069	Enter Q351 unequal to 0
1070	Thread depth too large
1071	Missing calibration data
1072	Tolerance exceeded
1073	Block scan active
1074	ORIENTATION not permitted
1075	3-D ROT not permitted
1076	Activate 3-D ROT
1077	Enter depth as negative
1078	Q303 in meas. cycle undefined!
1079	Tool axis not allowed
1080	Calculated values incorrect
1081	Contradictory meas. points
1082	Incorrect clearance height
1083	Contradictory plunge type
1084	This fixed cycle not allowed
1085	Line is write-protected
1086	Oversize greater than depth
1087	No point angle defined
1088	Contradictory data
1089	Slot position 0 not allowed
1090	Enter an infeed not equal to 0
1091	Switchover of Q399 not allowed
1092	Tool not defined
1093	Tool number not allowed
1094	Tool name not allowed
1095	Software option not active
1096	Kinematics cannot be restored
1097	Function not permitted
1098	Contradictory workpc. blank dim.
1099	Measuring position not allowed
1100	Kinematic access not possible
1101	Meas. pos. not in traverse range
1102	Preset compensation not possible

Error number	Text
1103	Tool radius too large
1104	Plunging type is not possible
1105	Plunge angle incorrectly defined
1106	Angular length is undefined
1107	Slot width is too large
1108	Scaling factors not equal
1109	Tool data inconsistent

FN16: F-PRINT – Formatted output of text and Q parameter values

With **FN16: F-PRINT**, you can also output to the screen any messages from the NC program. Such messages are displayed by the TNC in a pop-up window.

The function **FN16: F-PRINT** transfers Q parameter values and texts in a selectable format. If you send the values, the TNC saves the data in the file that you defined in the **FN16** block. The maximum size of the output file is 20 kilobytes.

To output the formatted texts and Q-parameter values, create a text file with the TNC's text editor. In this file you then define the output format and Q parameters you want to output.

Example of a text file to define the output format:

"MEASURING LOG OF IMPELLER CENTER OF GRAVITY";

"DATUM: %02d.%02d.%04d",DAY,MONTH,YEAR4;

"TIME: %02d:%02d:%02d",HOUR,MIN,SEC;

"NO. OF MEASURED VALUES: = 1";

“X1 = %9.3LF“, Q31;

“Y1 = %9.3LF“, Q32;

"Z1 = %9.3LF", Q33;

When you create a text file, use the following formatting functions:

Special characters	Function
"....."	Define output format for texts and variables between the quotation marks
%9.3LF	Define the format for Q parameters: 9 total characters (incl. decimal point), of which 3 are after the decimal, Long, Floating (decimal number)
%S	Format for text variable
%d	Format for integer
,	Separation character between output format and parameter
;	End of block character
\n	Line break

The following functions allow you to include the following additional information in the protocol log file:

Keyword	Function
CALL_PATH	Indicates the path for the NC program where you will find the FN16 function. Example: "Measuring program: %S",CALL_PATH;
M_CLOSE	Closes the file to which you are writing with FN16. Example: M_CLOSE;
M_APPEND	Upon renewed output, appends the log to the existing log. Example: M_APPEND;
L_ENGLISH	Outputs text only for English conversational language
L_GERMAN	Outputs text only for German conversational language
L_CZECH	Outputs text only for Czech conversational language
L_FRENCH	Outputs text only for French conversational language
L_ITALIAN	Outputs text only for Italian conversational language
L_SPANISH	Outputs text only for Spanish conversational language
L_SWEDISH	Outputs text only for Swedish conversational language
L_DANISH	Outputs text only for Danish conversational language
L_FINNISH	Outputs text only for Finnish conversational language
L_DUTCH	Outputs text only for Dutch conversational language
L_POLISH	Outputs text only for Polish conversational language
L_PORTUGUE	Outputs text only for Portuguese conversational language
L_HUNGARIA	Outputs text only for Hungarian conversational language
L_SLOVENIAN	Outputs text only for Slovenian conversational language
L_ALL	Display text independently of the conversational language

Keyword	Function
HOUR	Number of hours from the real-time clock
MIN	Number of minutes from the real-time clock
SEC	Number of seconds from the real-time clock
DAY	Day from the real-time clock
MONTH	Month as a number from the real-time clock
STR_MONTH	Month as a string abbreviation from the real-time clock
YEAR2	Two-digit year from the real-time clock
YEAR4	Four-digit year from the real-time clock

In the part program, program FN 16: F-PRINT to activate the output:

```
96 FN 16: F-PRINT TNC:\MASKE\MASKE1.A/ TNC:\PROT1.TXT
```

The TNC then creates the file PROT1.TXT:

MEASURING LOG OF IMPELLER CENTER OF GRAVITY

DATE: 27.09.2014

TIME: 8:56:34 AM

NO. OF MEASURED VALUES : = 1

X1 = 149.360

Y1 = 25.509

Z1 = 37.000

If you output the same file more than once in the program, the TNC appends all texts to the end of the texts already output within the target file.

If you use **FN16** more than once in the program, the TNC saves all texts in the file that you defined in the **FN16** function. The file is not output until the TNC reads the **END PGM** block, or you press the NC stop button, or you close the file with **M_CLOSE.**

In the **FN16** block, program the format file and the log file with their respective file type extensions

If you enter only the file name for the path of the log file, the TNC saves the log file in the directory in which the NC program with the **FN16** function is located.

You can define a standard path for outputting protocol files via the user parameters **fn16DefaultPath** and **fn16DefaultPathSim** (Program Test).

Displaying messages on the TNC screen

You can also use the function **FN16: F-PRINT** to display any messages from the NC program in a pop-up window on the TNC screen. This makes it easy to display explanatory texts, including long texts, at any point in the program in a way that the user has to react to them. You can also display Q-parameter contents if the protocol description file contains such instructions.

For the message to appear on the TNC screen, you need only enter **SCREEN:** as the name of the protocol file.

```
96 FN 16: F-PRINT TNC:\MASKE\MASKE1.A/SCREEN:
```

If the message has more lines than fit in the pop-up window, you can use the arrow keys to page in the window.

To close the pop-up window, press the **CE** key. To have the program close the window, program the following NC block:

```
96 FN 16: F-PRINT TNC:\MASKE\MASKE1.A/SCLR:
```

As standard behavior, the **FN16** function overwrites already existing log files with the same name
Use **M_APPEND** if you want to append new log information to an existing log.

Exporting messages

The **FN 16** function also enables you to save the log files externally.

Enter the complete target path in the **FN 16** function:

```
96 FN 16: F-PRINT TNC:\MSK\MSK1.A / PC325:\LOG\PRO1.TXT
```

As standard behavior, the **FN16** function overwrites already existing log files with the same name
Use **M_APPEND** if you want to append new log information to an existing log.

FN 18: SYSREAD: Reading system data

With the **FN 18: SYSREAD** function you can read system data and store them in Q parameters. You select the system data through a group name (ID number), and additionally through a number and an index.

Group name, ID no.	Number	Index	Meaning
Program information, 10	3	-	Number of the active fixed cycle
	103	Q parameter number	Relevant within NC cycles; for inquiry as to whether the Q parameter given under IDX was explicitly stated in the associated CYCLE DEF.
System jump addresses, 13	1	-	Label jumped to during M2/M30 instead of ending the current program. Value = 0: M2/M30 has the normal effect
	2	-	Label jumped to if FN14: ERROR after the NC CANCEL reaction instead of aborting the program with an error. The error number programmed in the FN14 command can be read under ID992 NR14. Value = 0: FN14 has the normal effect.
	3	-	Label jumped to in the event of an internal server error (SQL, PLC, CFG) instead of aborting the program with an error message. Value = 0: Server error has the normal effect.
Machine status, 20	1	-	Active tool number
	2	-	Prepared tool number
	3	-	Active tool axis 0=X, 1=Y, 2=Z, 6=U, 7=V, 8=W
	4	-	Programmed spindle speed
	5	-	Active spindle condition: -1=not defined, 0=M3 active, 1=M4 active, 2=M5 after M3, 3=M5 after M4
	7	-	Gear range
	8	-	Coolant status: 0=off, 1=on
	9	-	Active feed rate
	10	-	Index of prepared tool
	11	-	Index of active tool
Channel data, 25	1	-	Channel number

Group name, ID no.	Number	Index	Meaning
Cycle parameter, 30	1	-	Set-up clearance of active fixed cycle
	2	-	Drilling depth / milling depth of active fixed cycle
	3	-	Plunging depth of active fixed cycle
	4	-	Feed rate for pecking in active fixed cycle
	5	-	1st side length for rectangular pocket cycle
	6	-	2nd side length for rectangular pocket cycle
	7	-	1st side length for slot cycle
	8	-	2nd side length for slot cycle
	10	-	Feed rate for milling in active fixed cycle
	11	-	Direction of rotation for active fixed cycle
	12	-	Dwell time for active fixed cycle
	13	-	Thread pitch for Cycles 17
	14	-	Finishing allowance for active fixed cycle
	22	-	Probing path
	23	-	Probing feed rate
Modal condition, 35	1	-	Dimensions: 0 = absolute (G90) 1 = incremental (G91)
Data for SQL tables, 40	1	-	Result code for the last SQL command
Data from the tool table, 50	1	Tool no.	Tool length
	2	Tool no.	Tool radius
	3	Tool no.	Tool radius R2
	4	Tool no.	Oversize for tool length DL
	5	Tool no.	Tool radius oversize DR
	6	Tool no.	Tool radius oversize DR2
	7	Tool no.	Tool locked (0 or 1)
	8	Tool no.	Number of the replacement tool

Group name, ID no.	Number	Index	Meaning
	9	Tool no.	Maximum tool age TIME1
	10	Tool no.	Maximum tool age TIME2
	11	Tool no.	Current tool age CUR. TIME
	12	Tool no.	PLC status
	13	Tool no.	Maximum tooth length LCUTS
	15	Tool no.	TT: Number of tool teeth CUT
	16	Tool no.	TT: Wear tolerance for length LTOL
	17	Tool no.	TT: Wear tolerance for radius RTOL
	18	Tool no.	TT: Rotational direction DIRECT (0=positive/–1=negative)
	19	Tool no.	TT: Offset in plane R-OFFS
	20	Tool no.	TT: Offset in length L-OFFS
	21	Tool no.	TT: Break tolerance for length LBREAK
	22	Tool no.	TT: Break tolerance for radius RBREAK
	23	Tool no.	PLC value
	28	Tool no.	Maximum rpm NMAX
	32	Tool no.	Point angle TANGLE
	35	Tool no.	Wear tolerance for radius R2TOL
	37	Tool no.	Corresponding line in the touch-probe table
	38	Tool no.	Timestamp of last use
Pocket table data, 51	1	Pocket number	Tool number
	2	Pocket number	Special tool: 0=No, 1=Yes
	3	Pocket number	Fixed pocket: 0=No, 1=Yes
	4	Pocket number	Locked pocket: 0=No, 1=Yes
	5	Pocket number	PLC status
Tool pocket, 52	1	Tool no.	Pocket number P
	2	Tool no.	Magazine number

Group name, ID no.	Number	Index	Meaning
Values programmed immediately after TOOL CALL, 60	1	-	Tool number T
	2	-	Active tool axis 0 = X 6 = U 1 = Y 7 = V 2 = Z 8 = W
	3	-	Spindle speed S
	4	-	Oversize for tool length DL
	5	-	Tool radius oversize DR
	6	-	Automatic TOOL CALL 0 = Yes, 1 = No
	7	-	Tool radius oversize DR2
	8	-	Tool index
	9	-	Active feed rate
Values programmed immediately after TOOL DEF, 61	1	-	Tool number T
	2	-	Length
	3	-	Radius
	4	-	Index
	5	-	Tool data programmed in TOOL DEF 1 = Yes, 0 = No
Active tool compensation, 200	1	1 = without oversize 2 = with oversize 3 = with oversize and Oversize from TOOL CALL	Active radius
	2	1 = without oversize 2 = with oversize 3 = with oversize and Oversize from TOOL CALL	Active length
	3	1 = without oversize 2 = with oversize 3 = with oversize and Oversize from TOOL CALL	Rounding radius R2
Active transformations, 210	3	-	Active mirrored axis
			0: Mirroring not active
			+1: X axis mirrored

Group name, ID no.	Number	Index	Meaning
			+2: Y axis mirrored
			+4: Z axis mirrored
			+64: U axis mirrored
			+128: V axis mirrored
			+256: W axis mirrored
			Combinations = Sum of individual axes
	4	1	Active scaling factor in X axis
	4	2	Active scaling factor in Y axis
	4	3	Active scaling factor in Z axis
	4	7	Active scaling factor in U axis
	4	8	Active scaling factor in V axis
	4	9	Active scaling factor in W axis
Active datum shift, 220	2	1	X axis
		2	Y axis
		3	Z axis
		4	A axis
		5	B axis
		6	C axis
		7	U axis
		8	V axis
		9	W axis

Group name, ID no.	Number	Index	Meaning
Traverse range, 230	2	1 to 9	Negative software limit switch in axes 1 to 9
	3	1 to 9	Positive software limit switch in axes 1 to 9
	5	-	Software limit switch on or off: 0 = on, 1 = off
Nominal position in the REF system, 240	1	1	X axis
		2	Y axis
		3	Z axis
		4	A axis
		5	B axis
		6	C axis
		7	U axis
		8	V axis
		9	W axis
Current position in the active coordinate system, 270	1	1	X axis
		2	Y axis
		3	Z axis
		4	A axis
		5	B axis
		6	C axis
		7	U axis
		8	V axis
		9	W axis

Group name, ID no.	Number	Index	Meaning
TS triggering touch probe, 350	50	1	Touch probe type
		2	Line in the touch-probe table
	51	-	Effective length
	52	1	Effective ball radius
		2	Rounding radius
	53	1	Center offset (reference axis)
		2	Center offset (minor axis)
	54	-	Spindle-orientation angle in degrees (center offset)
	55	1	Rapid traverse
		2	Measuring feed rate
	56	1	Maximum measuring range
		2	Safety clearance
	57	1	Spindle orientation possible: 0=No, 1=Yes
		2	Spindle-orientation angle
TT tool touch probe	70	1	Touch probe type
		2	Line in the touch-probe table
	71	1	Center point in reference axis (REF system)
		2	Center point in minor axis (REF system)
		3	Center point in tool axis (REF system)
	72	-	Probe contact radius
	75	1	Rapid traverse
		2	Measuring feed rate for stationary spindle
		3	Measuring feed rate for rotating spindle
	76	1	Maximum measuring range
		2	Safety clearance for linear measurement
		3	Safety clearance for radial measurement
	77	-	Spindle speed
	78	-	Probing direction

Group name, ID no.	Number	Index	Meaning
Reference point from touch probe cycle, 360	1	1 to 9 (X, Y, Z, A, B, C, U, V, W)	Last reference point of a manual touch probe cycle, or last touch point from Cycle 0 without probe length compensation but with probe radius compensation (workpiece coordinate system)
	2	1 to 9 (X, Y, Z, A, B, C, U, V, W)	Last reference point of a manual touch probe cycle, or last touch point from Cycle 0 without probe length or probe radius compensation (machine coordinate system)
	3	1 to 9 (X, Y, Z, A, B, C, U, V, W)	Result of measurement of the touch probe cycles 0 and 1 without probe radius or probe length compensation
	4	1 to 9 (X, Y, Z, A, B, C, U, V, W)	Last reference point of a manual touch probe cycle, or last touch point from Cycle 0 without probe length or stylus probe compensation (workpiece coordinate system)
	10	-	Oriented spindle stop
Value from the active datum table in the active coordinate system, 500	Line	Column	Read values
Basic transformation, 507	Line	1 to 6 (X, Y, Z, SPA, SPB, SPC)	Read the basic transformation of a preset
Axis offset, 508	Line	1 to 9 (X_OFFS, Y_OFFS, Z_OFFS, A_OFFS, B_OFFS, C_OFFS, U_OFFS, V_OFFS, W_OFFS)	Read the axis offset of a preset
Active preset, 530	1	-	Read the number of the active preset
Read data of the current tool, 950	1	-	Tool length L
	2	-	Tool radius R
	3	-	Tool radius R2
	4	-	Oversize for tool length DL
	5	-	Tool radius oversize DR
	6	-	Tool radius oversize DR2
	7	-	Tool locked TL 0 = not locked, 1 = locked
	8	-	Number of the replacement tool RT
	9	-	Maximum tool age TIME1
	10	-	Maximum tool age TIME2
	11	-	Current tool age CUR. TIME

Group name, ID no.	Number	Index	Meaning
	12	-	PLC status
	13	-	Maximum tooth length LCUTS
	15	-	TT: Number of tool teeth CUT
	16	-	TT: Wear tolerance for length LTOL
	17	-	TT: Wear tolerance for radius RTOL
	18	-	TT: Direction of rotation DIRECT 0 = Positive, –1 = Negative
	19	-	TT: Offset in plane R-OFFS
	20	-	TT: Offset in length L-OFFS
	21	-	TT: Break tolerance for length LBREAK
	22	-	TT: Break tolerance for radius RBREAK
	23	-	PLC value
	24	-	Tool type TYP 0 = Milling cutter, 21 = Touch probe
	27	-	Corresponding line in the touch-probe table
	32	-	Point angle
Touch probe cycles, 990	1	-	Approach behaviour: 0 = Standard behavior 1 = Effective radius, Safety clearance zero
	2	-	0 = Pushbutton monitoring off 1 = Pushbutton monitoring on
	4	-	0 = Stylus not deflected 1 = Stylus deflected
	8	-	Current spindle angle
Execution status, 992	10	-	Mid-program startup active 1 = Yes, 0 = No
	11	-	Search phase
	14	-	Number of the last FN14 error
	16	-	Real execution active 1 = Execution , 2 = Simulation
	31	-	Radius compensation in MDI mode with paraxial positioning blocks permitted 0 = Not permitted, 1 = Permitted

Example: Assign the value of the active scaling factor for the Z axis to Q25.

```
55 FN 18: SYSREAD Q25 = ID210 NR4 IDX3
```

FN 19: PLC – Transfer values to the PLC

> **!** This function may only be used with the permission of your machine tool builder.

The **FN 19: PLC** function transfers up to two numerical values or Q parameters to the PLC.

FN 20: WAIT FOR – NC and PLC synchronization

> **!** This function may only be used with the permission of your machine tool builder.

With the **FN 20: WAIT FOR** function you can synchronize the NC and PLC during a program run. The NC stops machining until the condition that you have programmed in the **FN 20: WAIT FOR** block is fulfilled.

SYNC is used whenever you read, for example, system data via **FN18: SYSREAD** that require synchronization with real time. The TNC stops the look-ahead calculation and executes the subsequent NC block only when the NC program has actually reached that block.

Example: Pause internal look-ahead calculation, read current position in the X axis

```
32 FN 20: WAIT FOR SYNC
33 FN 18: SYSREAD Q1 = ID270 NR1 IDX1
```

FN 29: PLC – Transfer values to the PLC

> **!** This function may only be used with the permission of your machine tool builder.

The **FN 29: PLC** function transfers up to eight numerical values or Q parameters to the PLC.

FN 37: EXPORT

> **!** This function may only be used with the permission of your machine tool builder.

You need the **FN 37: EXPORT** function if you want to create your own cycles and integrate them in the TNC.

9.9 Accessing tables with SQL commands

Introduction

Accessing of tables is programmed on the TNC with SQL commands in **transactions**. A transaction consists of multiple SQL commands that guarantee an orderly execution of the table entries.

Tables are configured by the machine manufacturer. Names and designations required as parameters for SQL commands are also specified.

The following **terms** are used:

- **Table**: A table consists of x columns and y rows. It is saved as a file in the File Manager of the TNC, and is addressed with the path and file name (=table name). Synonyms can also be used for addressing, as an alternative to the path and file name.
- **Columns**: The number and names of the columns are specified when configuring the table. In various SQL commands the column name is used for addressing.
- **Rows**: The number of rows is variable. You can insert new rows. There are no row numbers or other designators. However, you can select rows based on the contents of a column. Rows can only be deleted in the table editor, not by an NC program.
- **Cell**: The part of a column in a row.
- **Table entry**: Content of a cell.
- **Result set**: During a transaction, the selected columns and rows are managed in the result set. You can view the result set as a sort of "intermediate memory," which temporarily assumes the set of selected columns and rows. Result set
- **Synonym**: This term defines a name used for a table instead of its path and file name. Synonyms are specified by the machine manufacturer in the configuration data.

A transaction

In principle, a transaction consists of the following actions:

- Address the table (file), select rows and transfer them to the result set.
- Read rows from the result set, change rows or insert new rows.
- Conclude transaction: If changes/insertions were made, the rows from the result set are placed in the table (file).

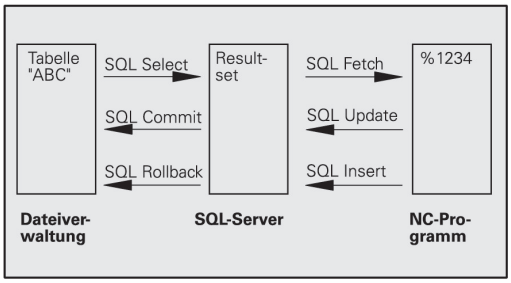

Other actions are also necessary so that table entries can be edited in an NC program and to ensure that other changes are not made to copies of the same table rows at the same time. This results in the following **transaction sequence**:

1 A Q parameter is specified for each column to be edited. The Q parameter is assigned to a column—it is "bound" (**SQL BIND...**)

2 Address the table (file), select rows and transfer them to the result set. In addition, you define which columns are transferred to the result set (**SQL SELECT...**). You can lock the selected rows. Other processes can then read these rows, but cannot change the table entries. You should always lock the selected rows when you are going to make changes (**SQL SELECT ... FOR UPDATE**).

3 Read rows from the result set, modify and/or add new rows: – Adopt one row of the result set into the Q parameters of your NC program (**SQL FETCH...**) – Prepare changes in the Q parameters and transfer to a row in the result set (**SQL UPDATE...**) – Prepare new table row in the Q parameters and transfer as a new row to the result set (**SQL INSERT...**)

4 Conclude transaction: – If changes/insertions were made, the data from the result set is placed in the table (file). The data is now saved in the file. Any locks are canceled, and the result set is released (**SQL COMMIT...**). – If table entries were **not** changed or inserted (only read access), any locks are canceled and the result set is released (**SQL ROLLBACK... WITHOUT INDEX**).

Multiple transactions can be edited at the same time.

> ⇨ You must conclude a transaction, even if it consists solely of read accesses. Only this guarantees that changes/insertions are not lost, that locks are canceled, and that result sets are released.

Result set

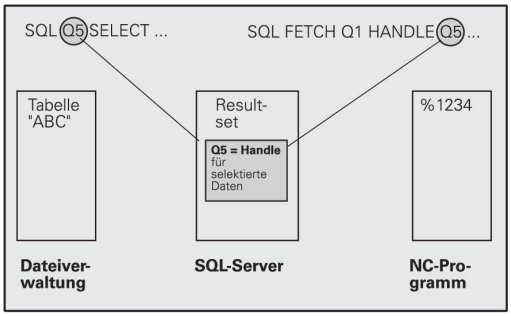

The selected rows are numbered in ascending order within the result set, starting from 0. This numbering is referred to as the **index.** The index is used for read and write accesses, enabling a row of the result set to be specifically addressed.

It can often be advantageous to sort the rows in the result set. Do this by specifying the table column containing the sorting criteria. Also select ascending or descending order (**SQL SELECT ... ORDER BY ...**).

The selected rows that were transferred to the result set are addressed with the **HANDLE**. All following SQL commands use the handle to refer to this "set of selected columns and rows."

When concluding a transaction, the handle is released (**SQL COMMIT...** or **SQL ROLLBACK...**). It is then no longer valid.

You can edit more than one result set at the same time. The SQL server assigns a new handle for each "Select" command.

"Binding" Q parameters to columns

The NC program does not have direct access to the table entries in the result set. The data must be transferred in Q parameters. In the other direction, the data is first prepared in the Q parameters and then transferred to the result set.

Specify with **SQL BIND ...** which table columns are mapped to which Q parameters. The Q parameters are "bound" (assigned) to the columns. Columns that are not bound to Q parameters are not included in the read-/write-processes.

If a new table row is generated with **SQL INSERT...,** the columns not bound to Q parameters are filled with default values.

9.9 Accessing tables with SQL commands

Programming SQL commands

This function can only be programmed if you have entered the code number 555343.

Program SQL commands in the **Programming** mode:

SPEC FCT
- Press the **SPEC FCT** key

PROGRAM FUNCTIONS
- Press the **PROGRAM FUNCTIONS** soft key.

▷
- Shift the soft-key row

SQL
- To select the MOD functions, press **SQL**
- Select an SQL command via soft key (see overview) or press the **SQL EXECUTE** soft key and program the SQL command

Overview of the soft keys

Soft key	Function
SQL BIND	**SQL BIND** Bind a Q parameter to a table column
SQL SELECT	**SQL SELECT** Select table rows
SQL EXECUTE	**SQL EXECUTE** Program a Select command
SQL FETCH	**SQL FETCH** Read table rows from the result set and save them in Q parameters
SQL ROLLBACK	**SQL ROLLBACK** ■ If **INDEX** is not programmed: Discard any changes/insertions and conclude the transaction. ■ If **INDEX** is programmed: The indexed row remains in the result set. All other rows are deleted from the result set. The transaction is **not** concluded.
SQL COMMIT	**SQL COMMIT** Transfer table rows from the result set into the table and conclude the transaction.
SQL UPDATE	**SQL UPDATE** Save data from the Q parameters in an existing table row in the result set
SQL INSERT	**SQL INSERT** Save data from the Q parameters in a new table row in the result set

SQL BIND

SQL BIND binds a Q parameter to a table column. The SQL commands "Fetch," "Update" and "Insert" evaluate this binding (assignment) during data transfer between the result set and the NC program.

An **SQL BIND** command without a table or column name cancels the binding. Binding remains effective at most until the end of the NC program or subprogram.

- You can program any number of bindings. Read and write processes only take into account the columns that were entered in the "Select" command.
- **SQL BIND...** must be programmed **before** "Fetch," "Update" or "Insert" commands are programmed. You can program a "Select" command without a preceding "Bind" command.
- If in the "Select" command you include columns for which no binding is programmed, an error occurs during read/write processes (program interrupt).

SQL BIND

- **Parameter no. for result**: Q parameter that is bound (assigned) to the table column.
- **Database: Column name**: Enter the table name and column name separated by a **.** (period)
  Table name: Synonym or path and file name of this table. The synonym is entered directly, whereas the path and file name are entered in single quotation marks.
  Column designation: Designation of the table column as given in the configuration data

Bind a Q parameter to a table column

```
11SQL BIND Q881
    "TAB_EXAMPLE.MEAS_NO"
12SQL BIND Q882
    "TAB_EXAMPLE.MEAS_X"
13SQL BIND Q883
    "TAB_EXAMPLE.MEAS_Y"
14SQL BIND Q884
    "TAB_EXAMPLE.MEAS_Z"
```

Cancel binding

```
91 SQL BIND Q881
92 SQL BIND Q882
93 SQL BIND Q883
94 SQL BIND Q884
```

SQL SELECT

SQL SELECT selects table rows and transfers them to the result set.

The SQL server places the data in the result set row-by-row. The rows are numbered in ascending order, starting from 0. This row number, called the **INDEX,** is used in the SQL commands "Fetch" and "Update."

Enter the selection criteria in the **SQL SELECT...WHERE...** function. This lets you restrict the number of rows to be transferred. If you do not use this option, all rows in the table are loaded.

Enter the sorting criteria in the **SQL SELECT...ORDER BY...** function. Enter the column designation and the keyword for ascending/descending order. If you do not use this option, the rows are placed in random order.

Lock out the selected rows for other applications with the **SQL SELECT...FOR UPDATE** function. Other applications can continue to read these rows, but cannot change them. We strongly recommend using this option if you are making changes to the table entries.

Empty result set: If no rows match the selection criteria, the SQL server returns a valid handle but no table entries.

SQL EXECUTE

- **Parameter no. for result**: Q parameter for the handle. The SQL server returns the handle for the group of columns and rows selected with the current "Select" command.
  With an error (selection could not be executed) the SQL server returns a 1. Code 0 identifies an invalid handle.
- **Data bank: SQL command text**: with the following elements:
  - **SELECT** (keyword):
    Name of the SQL command, names of the table columns to be transferred. Separate column names with a **,** (comma) (see examples). Q parameters must be bound to all columns entered here.
  - **FROM** table name:
    Synonym or path and file name of this table. The synonym is entered directly: the path name and table name are entered in single quotation marks (see examples of the SQL command); names of the table columns to be transferred—separate several columns by a comma (see examples). Q parameters must be bound to all columns entered here.

Select all table rows

```
11SQL BIND Q881
    "TAB_EXAMPLE.MEAS_NO"
12SQL BIND Q882
    "TAB_EXAMPLE.MEAS_X"
13SQL BIND Q883
    "TAB_EXAMPLE.MEAS_Y"
14SQL BIND Q884
    "TAB_EXAMPLE.MEAS_Z"
...
20SQL Q5 "SELECT
    MEAS_NO,MEAS_X,MEAS_Y,
    MEAS_Z FROM TAB_EXAMPLE"
```

Selection of table rows with the WHERE function

```
...
20SQL Q5 "SELECT
    MEAS_NO,MEAS_X,MEAS_Y,
    MEAS_Z FROM TAB_EXAMPLE
    WHERE MEAS_NO<20"
```

Selection of table rows with the WHERE function and Q parameters

```
...
20SQL Q5 "SELECT
    MEAS_NO,MEAS_X,MEAS_Y,
    MEAS_Z FROM TAB_EXAMPLE
    WHERE MEAS_NO==:'Q11'"
```

Table name defined with path and file name

```
...
20SQL Q5 "SELECT
    MEAS_NO,MEAS_X,MEAS_Y,
    MEAS_Z FROM 'V:\TABLE
    \TAB_EXAMPLE' WHERE
    MEAS_NO<20"
```

- Optional:
  WHERE selection criteria: A selection criterion consists of a column name, condition (see table) and comparator. Link several selection criteria with logical AND or OR. Program the comparative value directly or with a Q parameter. A Q parameter is introduced with a colon and placed in single quotation marks (see example).
- Optional:
  ORDER BY column name **ASC** for ascending sorting, or **ORDER BY** column name **DESC** for descending sorting. If you program neither ASC nor DESC, ascending sorting is executed by default. The TNC places the selected rows in the indicated column.
- Optional:
  FOR UPDATE (keyword): The selected rows are locked against write-accesses from other processes.

Condition	**Programming**
Equal to	= ==
Not equal to	!= <>
Less than	<
Less than or equal to	<=
Greater than	>
Greater than or equal to	>=
Linking multiple conditions:	
Logical AND	AND
Logical OR	OR

SQL FETCH

SQL FETCH reads the row addressed with **INDEX** from the result set, and places the table entries in the bound (assigned) Q parameters. The result set is addressed with the **HANDLE**.

SQL FETCH takes into account all columns entered in the "Select" command.

SQL FETCH

- **Parameter no. for result**: Q parameter, in which the SQL server has reported the result:
  0: No error occurred
  1: Error occurred (incorrect handle or index too large)
- **Database: SQL access ID**: Q parameter with the **handle** for identifying the result set (also see **SQL SELECT**).
- **Database: Index to SQL result**: Line number within the result set. The table entries of this row are read and are transferred into the bound Q parameters. If you do not enter an index, the first row is read (n=0).
  Either enter the row number directly or program the Q parameter containing the index

Row number is transferred in a Q parameter

```
11SQL BIND Q881
    "TAB_EXAMPLE.MEAS_NO"
12SQL BIND Q882
    "TAB_EXAMPLE.MEAS_X"
13SQL BIND Q883
    "TAB_EXAMPLE.MEAS_Y"
14SQL BIND Q884
    "TAB_EXAMPLE.MEAS_Z"
. . .
20SQL Q5 "SELECT
    MEAS_NO,MEAS_X,MEAS_Y,
    MEAS_Z FROM TAB_EXAMPLE"
. . .
30 SQL FETCH Q1HANDLE Q5 INDEX
    +Q2
```

Row number is programmed directly

```
. . .
30 SQL FETCH Q1HANDLE Q5 INDEX5
```

SQL UPDATE

SQL UPDATE transfers the data prepared in the Q parameters into the row of the result set addressed with **INDEX.** The existing row in the result set is completely overwritten.

SQL UPDATE takes into account all columns entered in the "Select" command.

SQL UPDATE

- **Parameter no. for result**: Q parameter, in which the SQL server has reported the result:
  0: No error occurred
  1: Error occurred (incorrect handle, index too large, value outside of value range or incorrect data format)
- **Database: SQL access ID**: Q parameter with the **handle** for identifying the result set (also see **SQL SELECT**).
- **Database: Index to SQL result**: Line number within the result set. The table entries prepared in the Q parameters are written to this row. If you do not enter an index, the first row is written to (n=0). Either enter the row number directly or program the Q parameter containing the index

Row number is transferred in a Q parameter

```
11 SQL BIND Q881
   "TAB_EXAMPLE.MESS_NR"
12 SQL BIND Q882
   "TAB_EXAMPLE.MESS_X"
13 SQL BIND Q883
   "TAB_EXAMPLE.MESS_Y"
14 SQL BIND Q884
   "TAB_EXAMPLE.MESS_Z"
. . .
20 SQL Q5 "SELECT
   MESS_NR,MESS_X,MESS_Y,MESS_Z
   FROM TAB_EXAMPLE"
. . .
30 SQL FETCH Q1 HANDLE Q5 INDEX
   +Q2
```

Row number is programmed directly

```
. . .
40 SQL UPDATEQ1 HANDLE Q5 INDEX5
```

SQL INSERT

SQL INSERT generates a new row in the result set and transfers the data prepared in the Q parameters into the new row.

SQL INSERT takes into account all columns entered in the "Select" command. Table columns not entered in the "Select" command are filled with default values.

SQL INSERT

- **Parameter no. for result**: Q parameter, in which the SQL server has reported the result:
  0: No error occurred
  1: Error occurred (incorrect handle, value outside of value range or incorrect data format)
- **Database: SQL access ID**: Q parameter with the **handle** for identifying the result set (also see **SQL SELECT**).

Row number is transferred in a Q parameter

```
11SQL BIND Q881
   "TAB_EXAMPLE.MEAS_NO"
12SQL BIND Q882
   "TAB_EXAMPLE.MEAS_X"
13SQL BIND Q883
   "TAB_EXAMPLE.MEAS_Y"
14SQL BIND Q884
   "TAB_EXAMPLE.MEAS_Z"
. . .
20SQL Q5 "SELECT
   MEAS_NO,MEAS_X,MEAS_Y,
   MEAS_Z FROM TAB_EXAMPLE"
. . .
40 SQL INSERTQ1 HANDLE Q5
```

SQL COMMIT

SQL COMMIT transfers all rows in the result set back to the table. A lock set with **SELECT...FOR UPDATE** is canceled.

The handle given in the **SQL SELECT** command loses its validity.

SQL COMMIT

- **Parameter no. for result**: Q parameter, in which the SQL server has reported the result:
  0: No error occurred
  1: Error occurred (incorrect handle or equal entries in columns requiring unique entries)
- **Database: SQL access ID**: Q parameter with the **handle** for identifying the result set (also see **SQL SELECT**).

```
11SQL BIND Q881
    "TAB_EXAMPLE.MEAS_NO"
12SQL BIND Q882
    "TAB_EXAMPLE.MEAS_X"
13SQL BIND Q883
    "TAB_EXAMPLE.MEAS_Y"
14SQL BIND Q884
    "TAB_EXAMPLE.MEAS_Z"
. . .
20SQL Q5 "SELECT
    MEAS_NO,MEAS_X,MEAS_Y,
    MEAS_Z FROM TAB_EXAMPLE"
. . .
30 SQL FETCH Q1HANDLE Q5 INDEX
    +Q2
. . .
40 SQL UPDATEQ1 HANDLE Q5 INDEX
    +Q2
. . .
50 SQL COMMITQ1 HANDLE Q5
```

SQL ROLLBACK

How **SQL ROLLBACK** is executed depends on whether **INDEX** is programmed:

- If **INDEX** is not programmed: The result set is **not** written back to the table (any changes/insertions are discarded). The transaction is closed and the handle given in the **SQL SELECT** command loses its validity. Typical application: Ending a transaction solely containing read-accesses.
- If **INDEX** is programmed: The indexed row remains. All other rows are deleted from the result set. The transaction is **not** concluded. A lock set with **SELECT...FOR UPDATE** remains for the indexed row. For all other rows it is reset.

SQL ROLLBACK

- **Parameter no. for result**: Q parameter, in which the SQL server has reported the result:
  0: No error occurred
  1: Error occurred (incorrect handle)
- **Database: SQL access ID**: Q parameter with the **handle** for identifying the result set (also see **SQL SELECT**).
- **Database: Index to SQL result**: Line that is to remain in the result set. Either enter the row number directly or program the Q parameter containing the index

```
11SQL BIND Q881
    "TAB_EXAMPLE.MEAS_NO"
12SQL BIND Q882
    "TAB_EXAMPLE.MEAS_X"
13SQL BIND Q883
    "TAB_EXAMPLE.MEAS_Y"
14SQL BIND Q884
    "TAB_EXAMPLE.MEAS_Z"
. . .
20SQL Q5 "SELECT
    MEAS_NO,MEAS_X,MEAS_Y,
    MEAS_Z FROM TAB_EXAMPLE"
. . .
30 SQL FETCH Q1HANDLE Q5 INDEX
    +Q2
. . .
50 SQL ROLLBACKQ1 HANDLE Q5
```

9.10 Entering formulas directly

Entering formulas

You can enter mathematical formulas that include several operations directly into the part program by soft key.

Press the **FORMULA** soft key to call the mathematical functions. The TNC displays the following soft keys in several soft-key rows:

Soft key	Linking function
+	**Addition** e. g. **Q10 = Q1 + Q5**
-	**Subtraction** e. g. **Q25 = Q7 - Q108**
*	**Multiplication** e. g. **Q12 = 5 * Q5**
/	**Division** e. g. **Q25 = Q1 / Q2**
(	**Opening parenthesis** e. g. **Q12 = Q1 * (Q2 + Q3)**
)	**Closing parenthesis** e. g. **Q12 = Q1 * (Q2 + Q3)**
SQ	**Square** e. g. **Q15 = SQ 5**
SQRT	**Square root** e. g. **Q22 = SQRT 25**
SIN	**Sine of an angle** e. g. **Q44 = SIN 45**
COS	**Cosine of an angle** e. g. **Q45 = COS 45**
TAN	**Tangent of an angle** e. g. **Q46 = TAN 45**
ASIN	**Arc sine** Inverse function of the sine; determine the angle from the ratio of the opposite side to the hypotenuse e.g. **Q10 = ASIN 0.75**
ACOS	**Arc cosine** Inverse function of the cosine; determine the angle from the ratio of the adjacent side to the hypotenuse e. g. **Q11 = ACOS Q40**

Soft key	Linking function
ATAN	**Arc tangent** Inverse function of the tangent; determine the angle from the ratio of the opposite side to the adjacent side e.g. **Q12 = ATAN Q50**
^	**Powers of values** e g **Q15 = 3^3**
PI	**Constant PI (3.4159)** e.g. **Q15 = PI**
LN	**Natural logarithm (LN) of a number** Base 2.7183 e. g. **Q15 = LN Q11**
LOG	**Logarithm of a number, Base 10** e. g. **Q33 = LOG Q22**
EXP	**Exponential function, 2.7183 to the power of n** e. g. **Q1 = EXP Q12**
NEG	**Negate (multiplication by -1)** e.g. **Q2 = NEG Q1**
INT	**Truncate digits after the decimal point** Form an integer e.g. **Q3 = INT Q42**
ABS	**Absolute value of a number** e. g. **Q4 = ABS Q22**
FRAC	**Truncate digits before the decimal point** Form a fraction e.g. **Q5 = FRAC Q23**
SGN	**Check algebraic sign of a number** e g **Q12 = SGN Q50** When return value Q12 = 1, then Q50 >= 0 When return value Q12 = -1, then Q50 < 0
%	**Calculate modulo value (division remainder)** e. g. **Q12 = 400 % 360** Result: Q12 = 40

Rules for formulas

Mathematical formulas are programmed according to the following rules:

Higher-level operations are performed first

```
12 Q1 = 5 * 3 + 2 * 10 = 35
```

1 Calculation 5 * 3 = 15
2 Calculation 2 * 10 = 20
3 Calculation 15 + 20 = 35

or

```
13 Q2 = SQ 10 - 3^3 = 73
```

1 Calculation step 10 squared = 100
2 Calculation step 3 to the third power = 27
3 Calculation 100 – 27 = 73

Distributive law

Law of distribution with parentheses calculation
a * (b + c) = a * b + a * c

Programming example

Calculate an angle with the arc tangent from the opposite side (Q12) and adjacent side (Q13); then store in Q25.

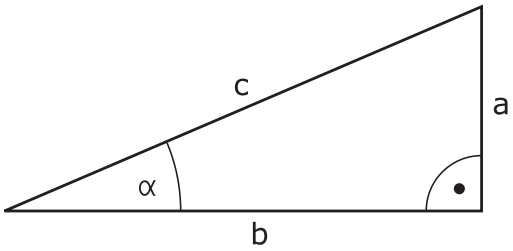

Q
- Select the formula entering function: Press the Q key and the FORMULA soft key:

FORMULA

Q
- Press the Q key on the external ASCII keyboard.

PARAMETER NUMBER FOR RESULT?

ENT
- Enter parameter number **25** and press the **ENT** key.

▷
- Shift the soft-key row and select the arc tangent function

ATAN

◁
- Shift the soft-key row and open the parentheses

(

Q
- Enter Q parameter number **12**

/
- Select division

Q
- Enter Q parameter number **13**

)
- Close parentheses and conclude formula entry

END

Example NC block

```
37 Q25 = ATAN (Q12/Q13)
```

9.11 String parameters

String processing functions

You can use the **QS** parameters to create variable character strings. You can output such character strings for example through the **FN 16:F-PRINT** function to create variable logs.

You can assign a linear sequence of characters (letters, numbers, special characters and spaces) up to a length of 255 characters to a string parameter. You can also check and process the assigned or imported values by using the functions described below. As in Q-parameter programming, you can use a total of 2000 QS parameters (see "Principle and overview of functions", page 204).

The **STRING FORMULA** and **FORMULA** Q-parameter functions contain various functions for processing the string parameters.

Soft key	STRING FORMULA functions	Page
STRING	Assigning string parameters	252
	Chain-linking string parameters	252
TOCHAR	Converting a numerical value to a string parameter	253
SUBSTR	Copy a substring from a string parameter	254

Soft key	FORMULA string functions	Page
TONUMB	Converting a string parameter to a numerical value	255
INSTR	Checking a string parameter	256
STRLEN	Finding the length of a string parameter	257
STRCOMP	Compare alphabetic priority	258

When you use a **STRING FORMULA**, the result of the arithmetic operation is always a string. When you use the **FORMULA** function, the result of the arithmetic operation is always a numeric value.

Assigning string parameters

You have to assign a string variable before you use it. Use the **DECLARE STRING** command to do so.

SPEC FCT
- Show the soft-key row with special functions

PROGRAM FUNCTIONS
- Open the function menu

STRING FUNCTIONS
- Select string functions

DECLARE STRING
- Select the **DECLARE STRING** function

Example NC block

```
37 DECLARE STRING QS10 = "WORKPIECE"
```

Chain-linking string parameters

With the concatenation operator (string parameter **||** string parameter) you can make a chain of two or more string parameters.

SPEC FCT
- Show the soft-key row with special functions

PROGRAM FUNCTIONS
- Open the function menu

STRING FUNCTIONS
- Select string functions

STRING FORMULA
- Select the **STRING FORMULA** function
- Enter the number of the string parameter in which the TNC is to save the concatenated string. Confirm with the **ENT** key
- Enter the number of the string parameter in which the **first** substring is saved. Confirm with the **ENT** key: The TNC displays the concatenation symbol **||**
- Confirm your entry with the **ENT** key
- Enter the number of the string parameter in which the **second** substring is saved. Confirm with the **ENT** key
- Repeat the process until you have selected all the required substrings. Conclude with the **END** key

Example: QS10 is to include the complete text of QS12, QS13 and QS14

```
37 QS10 = QS12 || QS13 || QS14
```

Parameter contents:

- **QS12**: **Workpiece**
- **QS13**: **Status:**
- **QS14**: **Scrap**
- **QS10**: **Workpiece Status: Scrap**

Converting a numerical value to a string parameter

With the **TOCHAR** function, the TNC converts a numerical value to a string parameter. This enables you to chain numerical values with string variables.

SPEC FCT
- ▶ Show the soft-key row with special functions

PROGRAM FUNCTIONS
- ▶ Open the function menu

STRING FUNCTIONS
- ▶ Select string functions

STRING FORMULA
- ▶ Select the **STRING FORMULA** function

TOCHAR
- ▶ Select the function for converting a numerical value to a string parameter
- ▶ Enter the number or the desired Q parameter to be converted, and confirm with the ENT key
- ▶ If desired, enter the number of decimal places that the TNC should convert, and confirm with the **ENT** key
- ▶ Close the parenthetical expression with the **ENT** key and confirm your entry with the **END** key

Example: Convert parameter Q50 to string parameter QS11, use 3 decimal places

```
37 QS11 = TOCHAR ( DAT+Q50 DECIMALS3 )
```

Copying a substring from a string parameter

The **SUBSTR** function copies a definable range from a string parameter.

SPEC FCT
- Show the soft-key row with special functions

PROGRAM FUNCTIONS
- Open the function menu

STRING FUNCTIONS
- Select string functions

STRING FORMULA
- Select the **STRING FORMULA** function
- Enter the number of the string parameter in which the TNC is to save the copied string. Confirm with the **ENT** key

SUBSTR
- Select the function for cutting out a substring
- Enter the number of the QS parameter from which the substring is to be copied. Confirm with the ENT key
- Enter the number of the place starting from which to copy the substring, and confirm with the **ENT** key
- Enter the number of characters to be copied, and confirm with the **ENT** key
- Close the parenthetical expression with the **ENT** key and confirm your entry with the **END** key

Remember that the first character of a text sequence starts internally with the zeroth place.

Example: A four-character substring (LEN4) is read from the string parameter QS10 beginning with the third character (BEG2)

```
37 QS13 = SUBSTR ( SRC_QS10 BEG2 LEN4 )
```

Converting a string parameter to a numerical value

The **TONUMB** function converts a string parameter to a numerical value. The value to be converted should be only numerical.

> The QS parameter must contain only one numerical value. Otherwise the TNC will output an error message.

Q

- Select Q-parameter functions

FORMULA

- Select the **FORMULA** function
- Enter the number of the parameter in which the TNC is to save the numerical value. Confirm with the **ENT** key

◁

- Shift the soft-key row

TONUMB

- Select the function for converting a string parameter to a numerical value
- Enter the number of the QS parameter to be converted, and confirm with the **ENT** key
- Close the parenthetical expression with the **ENT** key and confirm your entry with the **END** key

Example: Convert string parameter QS11 to a numerical parameter Q82

```
37 Q82 = TONUMB ( SRC_QS11 )
```

Checking a string parameter

The **INSTR** function checks whether a string parameter is contained in another string parameter.

Q

- Select Q-parameter functions

FORMULA

- Select the **FORMULA** function
- Enter the number of the Q parameter for the result and confirm with the **ENT** key. The TNC saves in the parameter the position at which the sought-after text begins

◁

- Shift the soft-key row

INSTR

- Select the function for checking a string parameter
- Enter the number of the QS parameter in which the text to be searched for is saved. Confirm with the **ENT** key
- Enter the number of the QS parameter to be searched, and confirm with the **ENT** key
- Enter the number of the place starting from which the TNC is to search the substring, and confirm with the **ENT** key
- Close the parenthetical expression with the **ENT** key and confirm your entry with the **END** key

Remember that the first character of a text sequence starts internally with the zeroth place.

If the TNC cannot find the required substring, it will save the total length of the string to be searched (counting starts at 1) in the result parameter.

If the substring is found in more than one place, the TNC returns the first place at which it finds the substring.

Example: Search through QS10 for the text saved in parameter QS13. Begin the search at the third place.

```
37 Q50 = INSTR ( SRC_QS10 SEA_QS13 BEG2 )
```

Finding the length of a string parameter

The **STRLEN** function returns the length of the text saved in a selectable string parameter.

Q

- Select Q-parameter functions

FORMULA

- Select the **FORMULA** function
- Enter the number of the Q parameter in which the TNC is to save the ascertained string length. Confirm with the **ENT** key

◁

- Shift the soft-key row

STRLEN

- Select the function for finding the text length of a string parameter
- Enter the number of the QS parameter whose length the TNC is to ascertain, and confirm with the ENT key
- Close the parenthetical expression with the **ENT** key and confirm your entry with the **END** key

Example: Find the length of QS15

```
37 Q52 = STRLEN ( SRC_QS15 )
```

Comparing alphabetic sequence

The **STRCOMP** function compares string parameters for alphabetic priority.

Q

- Select Q-parameter functions

FORMULA

- Select the **FORMULA** function
- Enter the number of the Q parameter in which the TNC is to save the result of comparison. Confirm with the **ENT** key

◁

- Shift the soft-key row

STRCOMP

- Select the function for comparing string parameters
- Enter the number of the first QS parameter to be compared, and confirm with the ENT key
- Enter the number of the second QS parameter to be compared, and confirm with the ENT key
- Close the parenthetical expression with the **ENT** key and confirm your entry with the **END** key

The TNC returns the following results:

- **0**: The compared QS parameters are identical
- **-1**: The first QS parameter **precedes** the second QS parameter alphabetically
- **+1:** The first QS parameter **follows** the second QS parameter alphabetically

Example: QS12 and QS14 are compared for alphabetic priority

```
37 Q52 = STRCOMP ( SRC_QS12 SEA_QS14 )
```

Reading out machine parameters

Use the **CFGREAD** function to read out TNC machine parameters as numerical values or as strings.

In order to read out a machine parameter, you must use the TNC's configuration editor to determine the parameter name, parameter object, and, if they have been assigned, the group name and index:

Icon	Type	Meaning	Example
	Key	Group name of the machine parameter (if assigned)	CH_NC
	Entity	Parameter object (the name starts with "**Cfg**...")	CfgGeoCycle
	Attribute	Name of the machine parameter	displaySpindleErr
	Index	List index of a machine parameter (if assigned)	[0]

If you are in the configuration editor for the user parameters, you can change the display of the existing parameters. In the default setting, the parameters are displayed with short, explanatory texts. To display the actual system names of the parameters, press the key for the screen layout key and then the **SHOW SYSTEM NAME** soft key. Follow the same procedure to return to the standard display.

Each time you want to interrogate a machine parameter with the **CFGREAD** function, you must first define a QS parameter with attribute, entity and key.

The following parameters are read in the CFGREAD function's dialog:

- **KEY_QS**: Group name (key) of the machine parameter
- **TAG_QS**: Object name (entity) of the machine parameter
- **ATR_QS**: Name (attribute) of the machine parameter
- **IDX**: Index of the machine parameter

Reading a string of a machine parameter

In order to store the content of a machine parameter as a string in a QS parameter:

Q

- Press the **Q** key.

STRING FORMULA

- Select the **STRING FORMULA** function
- Enter the number of the string parameter in which the TNC is to save the machine parameter. Confirm with the **ENT** key
- Select the CFGREAD function
- Enter the numbers of the string parameters for the key, entity and attribute, then confirm with the **ENT** key
- Enter the number for the index, or skip the dialog with NO ENT, whichever applies
- Close the parenthetical expression with the **ENT** key and confirm your entry with the **END** key

Example: Read as a string the axis designation of the fourth axis

Parameter settings in the configuration editor

DisplaySettings

CfgDisplayData

axisDisplayOrder

[0] to [5]

14 DECLARE STRINGQS11 = ""	Assign string parameter for key
15 DECLARE STRINGQS12 = "CFGDISPLAYDATA"	Assign string parameter for entity
16 DECLARE STRINGQS13 = "AXISDISPLAYORDER"	Assign string parameter for parameter name
17 QS1 = CFGREAD(KEY_QS11 TAG_QS12 ATR_QS13 IDX3)	Read out machine parameter

Reading a numerical value of a machine parameter

Store the value of a machine parameter as a numerical value in a Q parameter:

Q

- Select Q-parameter functions

FORMULA

- Select the FORMULA function
- Enter the number of the Q parameter in which the TNC is to save the machine parameter. Confirm with the **ENT** key
- Select the CFGREAD function
- Enter the numbers of the string parameters for the key, entity and attribute, then confirm with the **ENT** key
- Enter the number for the index, or skip the dialog with NO ENT, whichever applies
- Close the parenthetical expression with the **ENT** key and confirm your entry with the **END** key

Example: Read overlap factor as Q parameter

Parameter settings in the configuration editor

ChannelSettings

CH_NC

CfgGeoCycle

pocketOverlap

14 DECLARE STRINGQS11 = "CH_NC"	Assign string parameter for key
15 DECLARE STRINGQS12 = "CFGGEOCYCLE"	Assign string parameter for entity
16 DECLARE STRINGQS13 = "POCKETOVERLAP"	Assign string parameter for parameter name
17 Q50 = CFGREAD(KEY_QS11 TAG_QS12 ATR_QS13)	Read out machine parameter

9.12 Preassigned Q parameters

The Q parameters Q100 to Q199 are assigned values by the TNC. The following types of information are assigned to Q parameters:

- Values from the PLC
- Tool and spindle data
- Data on operating status
- Results of measurements from touch probe cycles etc.

The TNC saves the values for the preassigned Q parameters Q108, Q114 and Q115 to Q117 in the unit of measure used by the active program.

> Do not use preassigned Q parameters (or QS parameters) between **Q100** and **Q199 (QS100** and **QS199)** as calculation parameters in NC programs. Otherwise you might receive undesired results.

Values from the PLC: Q100 to Q107

The TNC uses the parameters Q100 to Q107 to transfer values from the PLC to an NC program.

Active tool radius: Q108

The active value of the tool radius is assigned to Q108. Q108 is calculated from:

- Tool radius R (tool table or **TOOL DEF** block)
- Delta value DR from the tool table
- Delta value DR from the **TOOL CALL** block

> The TNC remembers the current tool radius even if the power is interrupted.

Tool axis: Q109

The value of Q109 depends on the current tool axis:

Tool axis	Parameter value
No tool axis defined	Q109 = –1
X axis	Q109 = 0
Y axis	Q109 = 1
Z axis	Q109 = 2
U axis	Q109 = 6
V axis	Q109 = 7
W axis	Q109 = 8

Spindle status: Q110

The value of the parameter Q110 depends on the M function last programmed for the spindle.

M function	Parameter value
No spindle status defined	Q110 = –1
M3: Spindle ON, clockwise	Q110 = 0
M4: Spindle ON, counterclockwise	Q110 = 1
M5 after M3	Q110 = 2
M5 after M4	Q110 = 3

Coolant on/off: Q111

M function	Parameter value
M8: Coolant ON	Q111 = 1
M9: Coolant OFF	Q111 = 0

Overlap factor: Q112

The overlap factor for pocket milling is assigned to Q112.

Unit of measurement for dimensions in the program: Q113

During nesting with PGM CALL, the value of the parameter Q113 depends on the dimensional data of the program from which the other programs are called.

Dimensional data of the main program	Parameter value
Metric system (mm)	Q113 = 0
Inch system (inches)	Q113 = 1

Tool length: Q114

The current value for the tool length is assigned to Q114.

The TNC remembers the current tool length even if the power is interrupted.

Coordinates after probing during program run

The parameters Q115 to Q119 contain the coordinates of the spindle position at the moment of contact during programmed measurement with the 3-D touch probe. The coordinates refer to the datum point that is active in the **Manual Operation** mode.

The length of the stylus and the radius of the ball tip are not compensated in these coordinates.

Coordinate axis	Parameter value
X axis	Q115
Y axis	Q116
Z axis	Q117
4th axis Machine-dependent	Q118
5th axis Machine-dependent	Q119

Deviation between actual value and nominal value during automatic tool measurement with the TT 130

Deviation of actual from nominal value	Parameter value
Tool length	Q115
Tool radius	Q116

10

Programming: Miscellaneous functions

10.1 Entering miscellaneous functions M

Fundamentals

With the TNC's miscellaneous functions—also called M functions—you can affect

- the program run, e.g. a program interruption
- the machine functions, such as switching spindle rotation and coolant supply on and off
- the path behavior of the tool

The machine tool builder may add some M functions that are not described in this User's Manual. Refer to your machine manual.

You can enter up to four M functions at the end of a positioning block or in a separate block. The TNC displays the following dialog question: **Miscellaneous function M ?**

You usually enter only the number of the M function in the programming dialog. Some M functions can be programmed with additional parameters. In this case, the dialog is continued for the parameter input.

In the **Manual Operation** and **El. Handwheel** modes of operation, the M functions are entered with the **M** soft key.

Please note that some M functions become effective at the start of a positioning block, and others at the end, regardless of their position in the NC block.

M functions come into effect in the block in which they are called.

Some M functions are effective only in the block in which they are programmed. Unless the M function is only effective blockwise, either you must cancel it in a subsequent block with a separate M function, or it is automatically canceled by the TNC at the end of the program.

Entering an M function in a STOP block

If you program a **STOP** block, the program run or test run is interrupted at the block, for example for tool inspection. You can also enter an M function in a **STOP** block:

STOP

- To program an interruption of program run, press the **STOP** key.
- Enter a miscellaneous function **M**

Example NC blocks

```
87 STOP M6
```

10.2 M functions for program run inspection, spindle and coolant

Overview

The machine tool builder can influence the behavior of the miscellaneous functions described below. Refer to your machine manual.

M	Effect	Effective at block	Start	End
M0	Program STOP Spindle STOP			■
M1	Optional program STOP Spindle STOP if necessary Coolant OFF if necessary (not effective during Test Run, function determined by the machine tool builder)			■
M2	STOP program run Spindle STOP Coolant OFF Return jump to block 1 CLEAR status display (depending on machine parameter **clearMode**)			■
M3	Spindle ON clockwise		■	
M4	Spindle ON counterclockwise		■	
M5	Spindle STOP			■
M6	Tool change Spindle STOP Program STOP			■
M8	Coolant ON		■	
M9	Coolant OFF			■
M13	Spindle ON clockwise Coolant ON		■	
M14	Spindle ON counterclockwise Coolant ON		■	
M30	Same as M2			■

10.3 Miscellaneous functions for coordinate data

Programming machine-referenced coordinates: M91/M92

Scale reference point

On the scale, a reference mark indicates the position of the scale reference point.

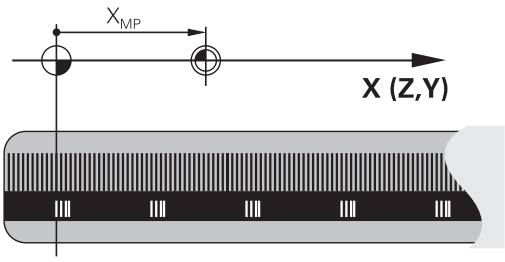

Machine datum

The machine datum is required for the following tasks:

- Define the axis traverse limits (software limit switches)
- Approach machine-referenced positions (such as tool change positions)
- Set a workpiece datum

The distance in each axis from the scale reference point to the machine datum is defined by the machine tool builder in a machine parameter.

Standard behavior

The TNC references coordinates to the workpiece datum (see "Datum setting without a 3-D touch probe", page 309).

Behavior with M91—Machine datum

If you want the coordinates in a positioning block to be referenced to the machine datum, end the block with M91.

> If you program incremental coordinates in an M91 block, enter them with respect to the last programmed M91 position. If no M91 position is programmed in the active NC block, then enter the coordinates with respect to the current tool position.

The coordinate values on the TNC screen are referenced to the machine datum. Switch the display of coordinates in the status display to REF, see "Status displays", page 69.

Behavior with M92—Additional machine datum

In addition to the machine datum, the machine tool builder can also define an additional machine-based position as a reference point.

For each axis, the machine tool builder defines the distance between the machine datum and this additional machine datum. Refer to your machine manual.

If you want the coordinates in a positioning block to be based on the additional machine datum, end the block with M92.

Radius compensation remains the same in blocks that are programmed with M91 or M92. The tool length, however, is **not** compensated.

Effect

M91 and M92 are effective only in the blocks in which they are programmed.

M91 and M92 take effect at the start of block.

Workpiece datum

If you want the coordinates to always be referenced to the machine datum, you can inhibit datum setting for one or more axes.

If datum setting is inhibited for all axes, the TNC no longer displays the **SET DATUM** soft key in the **Manual Operation** mode.

The figure shows coordinate systems with the machine datum and workpiece datum.

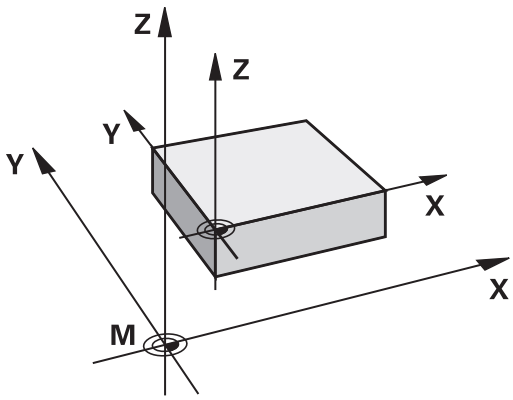

M91/M92 in the Test Run mode

In order to be able to graphically simulate M91/M92 movements, you need to activate working space monitoring and display the workpiece blank referenced to the set reference point, see "Showing the workpiece blank in the working space ", page 343.

Reducing display of a rotary axis to a value less than 360°: M94

Standard behavior

The TNC moves the tool from the current angular value to the programmed angular value.

Example:

Current angular value:	538°
Programmed angular value:	180°
Actual distance of traverse:	-358°

Behavior with M94

At the start of block, the TNC first reduces the current angular value to a value less than 360° and then moves the tool to the programmed value. If several rotary axes are active, M94 will reduce the display of all rotary axes. As an alternative you can enter a rotary axis after M94. The TNC then reduces the display only of this axis.

Example NC blocks

To reduce display of all active rotary axes:

```
M94
```

To reduce display of the C axis only:

```
M94 C
```

To reduce display of all active rotary axes and then move the tool in the C axis to the programmed value:

```
C+180 FMAX M94
```

Effect

M94 is effective only in the block in which it is programmed.

M94 becomes effective at the start of block.

10.4 Miscellaneous functions for path behavior

Feed rate factor for plunging movements: M103

Standard behavior

The TNC moves the tool at the last programmed feed rate, regardless of the direction of traverse.

Behavior with M103

The TNC reduces the feed rate when the tool moves in the negative direction of the tool axis. The feed rate for plunging FZMAX is calculated from the last programmed feed rate FPROG and a factor F%:

FZMAX = FPROG x F%

Programming M103

If you enter M103 in a positioning block, the TNC continues the dialog by asking you the factor F.

Effect

M103 becomes effective at the start of block.
To cancel M103, program M103 once again without a factor.

Example NC blocks

The feed rate for plunging is to be 20 % of the feed rate in the plane.

...	Actual contouring feed rate (mm/min):
17 X+20 R+ F500 M103 F20	500
18 Y+50	500
19 IZ-2.5	100
20 IY+5	500
21 IX+50	500
22 Z+5	500

Feed rate in millimeters per spindle revolution: M136

Standard behavior

The TNC moves the tool at the programmed feed rate F in mm/min

Behavior with M136

> In inch-programs, M136 is not permitted in combination with the new alternate feed rate FU.
>
> The spindle is not permitted to be controlled when M136 is active.

With M136, the TNC does not move the tool in mm/min, but rather at the programmed feed rate F in millimeters per spindle revolution. If you change the spindle speed by using the spindle override, the TNC changes the feed rate accordingly.

Effect

M136 becomes effective at the start of block.

You can cancel M136 by programming M137.

Retraction from the contour in the tool-axis direction: M140

Standard behavior

In the program run modes Program run single block and Program run full sequence the TNC moves the tool as defined in the part program.

Behavior with M140

With M140 MB (move back) you can enter a path in the direction of the tool axis for departure from the contour.

Input

If you enter M140 in a positioning block, the TNC continues the dialog and asks for the desired path of tool departure from the contour. Enter the requested path that the tool should follow when departing the contour, or press the MB MAX soft key to move to the limit of the traverse range.

In addition, you can program the feed rate at which the tool traverses the entered path. If you do not enter a feed rate, the TNC moves the tool along the entered path at rapid traverse.

Effect

M140 is effective only in the block in which it is programmed.

M140 becomes effective at the start of block.

Example NC blocks

Block 250: Retract the tool 50 mm from the contour.

Block 251: Move the tool to the limit of the traverse range.

```
250 X+0 F125 M140 MB 50 F750
251 X+0 F125 M140 MB MAX
```

With **M140 MB MAX** you can only retract in the positive direction.

Always define a TOOL CALL with a tool axis before entering **M140**, otherwise the direction of traverse is not defined.

11

Programming: Special functions

11.1 Overview of special functions

The TNC provides the following powerful special functions for a large number of applications:

Function	Description
Working with text files	page 291
Working with freely definable tables	page 279

Press the **SPEC FCT** and the corresponding soft keys to access further special functions of the TNC. The following tables will give you an overview of which functions are available.

Main menu for SPEC FCT special functions

SPEC FCT

▶ Press the special functions key

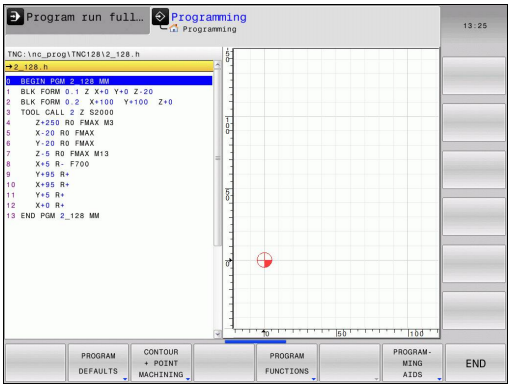

Soft key	Function	Description
PROGRAM DEFAULTS	Define program defaults	page 277
CONTOUR + POINT MACHINING	Functions for contour and point machining	page 277
PROGRAM FUNCTIONS	Define different conversational functions	page 278
PROGRAM-MING AIDS	Programming aids	page 123

After pressing the **SPEC FCT** key, you can open the **smartSelect** selection window with the **GOTO** key. The TNC displays a structure overview with all available functions. You can rapidly navigate with the cursor or mouse and select functions in the tree diagram. The TNC displays online help for the specific functions in the window on the right.

Program defaults menu

PROGRAM DEFAULTS

▶ Select the program defaults menu

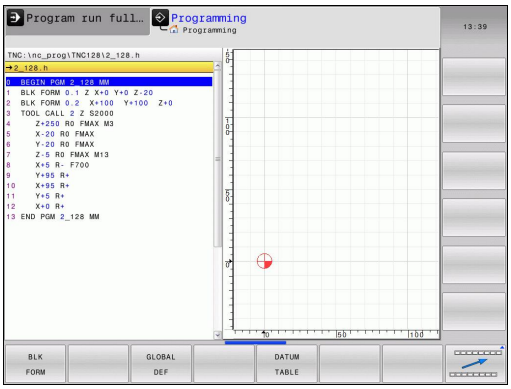

Soft key	Function	Description
BLK FORM	Define workpiece blank	page 87
DATUM TABLE	Select datum table	page 472

Functions for contour and point machining menu

CONTOUR + POINT MACHINING

▶ Select the menu for functions for contour and point machining

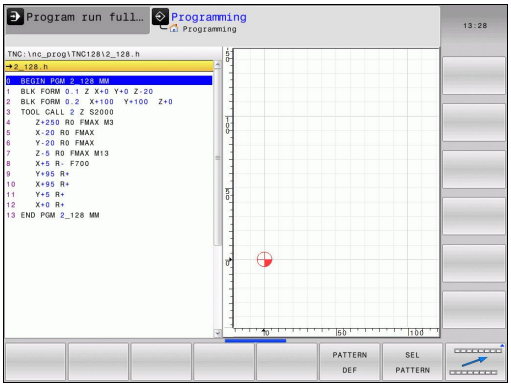

Soft key	Function	Description
PATTERN DEF	Define regular machining pattern	398
SEL PATTERN	Select the point file with machining positions	409

Menu of various conversational functions

PROGRAM FUNCTIONS

- Select the menu for defining various conversational functions

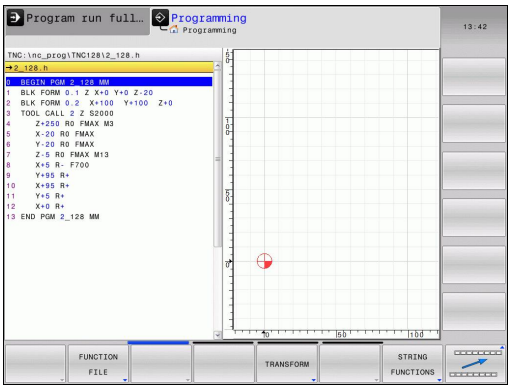

Soft key	Function	Description
FUNCTION FILE	Define file functions	page 287
TRANSFORM	Define coordinate transformations	page 288
STRING FUNCTIONS	Define string functions	page 251
FUNCTION FEED	Define dwell time	page 285
INSERT COMMENT	Add comments	page 125

11.2 Freely definable tables

Fundamentals

In freely definable tables you can read and save any information from the NC program. The Q parameter functions **FN 26** to **FN 28** are provided for this purpose.

You can change the format of freely definable tables, i.e. the columns and their properties, by using the structure editor. They enable you to make tables that are exactly tailored to your application.

You can also switch between table view (default setting) and form view.

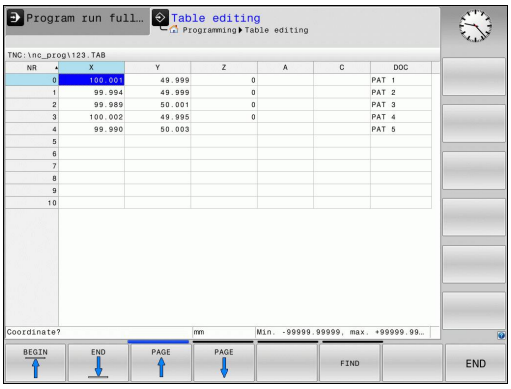

Creating a freely definable table

- To call the file manager, press the **PGM MGT** key
- Enter any file name with the .TAB extension and confirm with the **ENT** key. The TNC displays a pop-up window with permanently saved table formats
- Use the arrow key to select a table template e.g. **EXAMPLE.TAB** and confirm with the **ENT** key. The TNC opens a new table in the predefined format
- To adapt the table to your requirements you have to edit the table format, see "Editing the table format", page 280

Machine tool builders may define their own table templates and save them in the TNC. When you create a new table, the TNC opens a pop-up window listing all available table templates.

You can also save your own table templates in the TNC. To do this, you create a new table, change the table format and save the table in the **TNC:\system \proto** directory. Then your template will also be available in the list box for table templates when you create a new table.

Editing the table format

- Press the **EDIT FORMAT** soft key (shift the soft-key row): The TNC opens the editor form, in which the table structure is shown. The meanings of the structure commands (header entries) are shown in the following table.

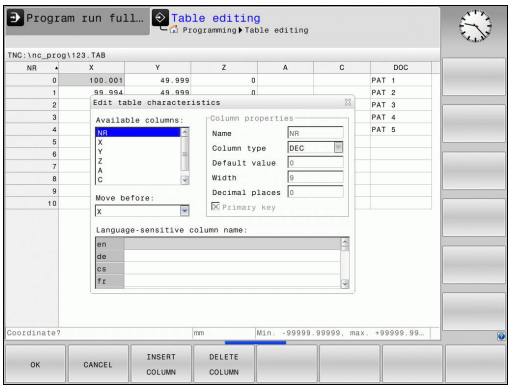

Structure command	Meaning
Available columns:	List of all columns contained in the table
Move before:	The entry highlighted in **Available columns** is moved in front of this column
Name	Column name: Is displayed in the header
Column type	**TEXT**: Text entry **SIGN**: Sign + or - **BIN**: Binary number **DEC**: Decimal, positive, complete number (cardinal number) **HEX**: Hexadecimal number **INT**: Complete number **LENGTH**: Length (is converted in inch programs) **FEED**: Feed rate (mm/min or 0.1 inch/min) **IFEED**: Feed rate (mm/min or inch/min) **FLOAT**: Floating-point number **BOOL**: Logical value **INDEX**: Index **TSTAMP**: Fixed format for date and time
Default value	Default value for the fields in this column
Width	Width of the column (number of characters)
Primary key	First table column
Language-sensitive column name	Language-sensitive dialogs

You can use a connected mouse or the TNC keyboard to navigate in the form. Navigation using the TNC keyboard:

- Press the navigation keys to go to the input fields. Use the arrow keys to navigate within an input field. To open pop-down menus, press the **GOTO** key.

> In a table that already has lines, you cannot change the table properties **Name** and **Column type**. Once you have deleted all lines, you can change these properties. If required, create a backup copy of the table beforehand.
>
> In a field of the **TSTAMP** column type you can reset an invalid value if you press the **CE** key and then the **ENT** key.

Exiting the structure editor

- Press the **OK** soft key. The TNC closes the editor form and applies the changes. All changes are discarded by pressing the **CANCEL** soft key.

Switching between table and form view

All tables with the file extension **.TAB** can be opened in either list view or form view.

- Press the key for setting the screen layout. Select the respective soft key for list view or form view (form view: with or without dialog texts)

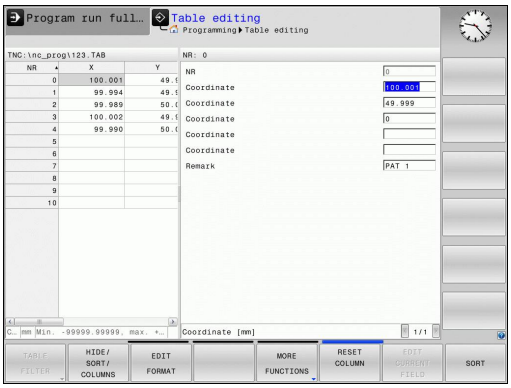

In the form view the TNC lists the line numbers with the contents of the first column in the left half of the screen.

In the right half you can change the data.

- Press the **ENT** key or the arrow key to move to the next input field.
- To select another line, press the green navigation key (folder symbol). This moves the cursor to the left window, and you can select the desired line with the arrow keys. Press the green navigation key to switch back to the input window.

FN 26: TABOPEN – Open a freely definable table

With the function **FN 26: TABOPEN** you open a freely definable table to be written to with **FN 27** or to be read from with **FN 28**.

Only one table can be open in an NC program. A new block with **FN 26: TABOPEN** automatically closes the last opened table.

The table to be opened must have the file name extension .TAB.

Example: Open the table TAB1.TAB, which is saved in the directory TNC:\DIR1.

```
56 FN 26: TABOPEN TNC:\DIR1\TAB1.TAB
```

FN 27: TABWRITE – Write to a freely definable table

With the **FN 27: TABWRITE** function you write to the table that you previously opened with **FN 26: TABOPEN**.

You can write several column names in a **TABWRITE** block. The column names must be written between quotation marks and separated by a comma. You define the values that the TNC is to write to the respective column with Q parameters.

Note that by default the **FN 27: TABWRITE** function writes values to the currently open table also in the Test run mode. The **FN18 ID992 NR16** function enables you to query in which operating mode the program is to be run. If the **FN27** function is to be run only in the **Program Run, Single Block** and **Program Run, Full Sequence** operating modes, you can skip the respective program section by using a jump command, page 213.

You can write only to numerical table fields.

If you wish to write to more than one column in a block, you must save the values under successive Q parameter numbers.

Example

You wish to write to the columns "Radius," "Depth" and "D" in line 5 of the presently opened table. The value to be written in the table must be saved in the Q parameters Q5, Q6 and Q7.

```
53 Q5 = 3.75
54 Q6 = -5
55 Q7 = 7.5
56 FN 27: TABWRITE 5/"RADIUS,DEPTH,D" = Q5
```

FN 28: TABREAD – Read from a freely definable table

With the **FN 28: TABREAD** function you read from the table previously opened with **FN 26: TABOPEN**.

You can define, i.e. read several column names in a **TABREAD** block. The column names must be written between quotation marks and separated by a comma. In the **FN 28** block you can define the Q parameter number in which the TNC is to write the value that is first read.

> You can read only numerical table fields.
>
> If you wish to read from more than one column in a block, the TNC will save the values under successive Q parameter numbers.

Example

You wish to read the values of the columns "Radius," "Depth" and "D" from line 6 of the presently opened table. Save the first value in Q parameter Q10 (second value in Q11, third value in Q12).

```
56 FN 28: TABREAD Q10 = 6/"RADIUS,DEPTH,D"
```

11.3 Dwell time FUNCTION FEED DWELL

Programming dwell time

Application

The behavior of this function varies depending on the respective machine.
Refer to your machine manual.

The **FUNCTION FEED DWELL** function is used to program a recurring dwell time in seconds, e.g. to force chip breaking . Program **FUNCTION FEED DWELL** immediately prior to the machining you wish to run with chip breaking.

The defined dwell time from **FUNCTION FEED DWELL** is not effective with rapid traverse and probing motion.

Damage to the workplace!
Do not use **FUNCTION FEED DWELL** for machining threads.

Procedure

Proceed as follows for the definition:

SPEC FCT
- Show the soft-key row with special functions

PROGRAM FUNCTIONS
- Select the menu for defining various plain-language functions

FUNCTION FEED
- Select the **FUNCTION FEED** soft key

FEED DWELL
- Select the **FEED DWELL** soft key
- Define the interval duration for dwelling D-TIME
- Define the interval duration for cutting F-TIME

NC block

```
13 FUNCTION FEED DWELL D-TIME0.5
   F-TIME5
```

Resetting dwell time

Reset to the dwell time immediately following the machining with chip breaking.

NC block

```
18 FUNCTION FEED DWELL RESET
```

Use **FUNCTION FEED DWELL RESET** to reset the recurring dwell time.

Proceed as follows for the definition:

SPEC FCT
- Show the soft-key row with special functions

PROGRAM FUNCTIONS
- Select the menu for defining various plain-language functions

FUNCTION FEED
- Select the **FUNCTION FEED** soft key

RESET FEED DWELL
- Select the **RESET FEED DWELL** soft key

You can also reset the dwell time by entering D-TIME 0.

The TNC automatically resets the **FUNCTION FEED DWELL** function at the end of a program.

11.4 File functions

Application

The **FILE FUNCTION** features are used to copy, move and delete files from within the part program.

> **!** You must not use **FILE** functions on programs or files, to which you have previously made reference with functions such as **CALL PGM** or **CYCL DEF 12 PGM CALL**.

Defining file functions

SPEC FCT
- Press the special functions key

PROGRAM FUNCTIONS
- Select the program functions

FUNCTION FILE
- Select the file functions: The TNC displays the available functions

Soft key	Function	Meaning
FILE COPY	**FILE COPY**	Copy file: Enter the name and path of the file to be copied, as well as the target path
FILE MOVE	**FILE MOVE**	Move file: Enter the name and path of the file to be moved, as well as the target path
FILE DELETE	**FILE DELETE**	Delete file: Enter the path and name of the file to be deleted

11.5 Definition of a datum shift

Overview

As an alternative to the coordinate transformation Cycle 7 **DATUM SHIFT,** you can use the **TRANS DATUM** plain-language function. Just as in Cycle 7, you can use **TRANS DATUM** to directly program shift values or activate a line from a selectable datum table. In addition, there is also the **TRANS DATUM RESET** function, which you can easily use to reset a datum shift.

TRANS DATUM AXIS

You can define a datum shift by entering values in the respective axes with the **TRANS DATUM AXIS** function. You can define up to nine coordinates in one block, and incremental entries are possible. Proceed as follows for the definition:

NC block

```
13 TRANS DATUMAXIS X+10 Y+25 Z+42
```

SPEC FCT
- Show the soft-key row with special functions

PROGRAM FUNCTIONS
- Select the menu for defining various plain-language functions

TRANSFORM
- Select transformations

TRANS DATUM
- Select datum shifting with **TRANS DATUM**

VALUES X Y Z
- Select the value input soft key
- Enter the datum shift in the affected axes, confirming with the **ENT** key each time

Values entered as absolute values refer to the workpiece datum, which is specified either by datum setting or with a preset from the preset table.

Incremental values always refer to the datum which was last valid (this may be a datum which has already been shifted).

TRANS DATUM TABLE

You can define a datum shift by selecting a datum number from a datum table with the **TRANS DATUM TABLE** function. Proceed as follows for the definition:

NC block

```
13 TRANS DATUMTABLE TABLINE25
```

SPEC FCT

- Show the soft-key row with special functions

PROGRAM FUNCTIONS

- Select the menu for defining various plain-language functions

TRANSFORM

- Select transformations

TRANS DATUM

- Select datum shifting with **TRANS DATUM**

←

- Reset the cursor to the function **TRANS AXIS**

TABLE .D

- Select datum shifting with **TRANS DATUM TABLE**
- If desired, enter the name of the datum table from which you want to activate the datum number, and confirm with the **ENT** key. If you do not want to define a datum table, confirm with the **NO ENT** key
- Enter the line number to be activated by the TNC, and confirm with the **ENT** key

If you did not define a datum table in the **TRANS DATUM TABLE** block, then the TNC uses the datum table already selected in the NC program with **SEL TABLE**, or the datum table with status M selected in the **Program Run, Single Block** or **Program Run, Full Sequence** operating mode.

TRANS DATUM RESET

Use the **TRANS DATUM RESET** function to cancel a datum shift. How you previously defined the datum is irrelevant. Proceed as follows for the definition:

NC block

```
13 TRANS DATUM RESET
```

SPEC FCT

- Show the soft-key row with special functions

PROGRAM FUNCTIONS

- Select the menu for defining various plain-language functions

TRANSFORM

- Select transformations

TRANS DATUM

- Select datum shifting with **TRANS DATUM**

RESET DATUM SHIFT

- Select the soft key

11.6 Creating text files

Application

You can use the TNC's text editor to write and edit texts. Typical applications:

- Recording test results
- Documenting working procedures
- Creating formula collections

Text files are type .A files (ASCII files). If you want to edit other types of files, you must first convert them into type .A files.

Opening and exiting text files

- Select the **Programming** mode of operation
- To call the file manager, press the **PGM MGT** key.
- Display type .A files: Press the **SELECT TYPE** and then the **SHOW** .A soft keys
- Select a file and open it with the **SELECT** soft key or **ENT** key, or create a new file by entering the new file name and confirming your entry with the **ENT** key

To leave the text editor, call the file manager and select a file of a different file type, for example a part program.

Soft key	Cursor movements
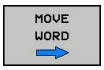	Move cursor one word to the right
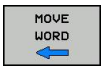	Move cursor one word to the left
	Go to beginning of file
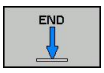	Go to end of file

Editing texts

Above the first line of the text editor, there is an information field showing the file name, location and line information:

File: Name of the text file

Line: Line in which the cursor is presently located

Column: Column in which the cursor is presently located

The text is inserted or overwritten at the location of the cursor. You can move the cursor to any desired position in the text file by pressing the arrow keys.

The line in which the cursor is presently located is depicted in a different color. You can insert a line break with the Return or **ENT** key.

Deleting and re-inserting characters, words and lines

With the text editor, you can erase words and even lines, and insert them at any desired location in the text.

- Move the cursor to the word or line that you wish to erase and insert at a different place in the text
- Press the **DELETE WORD** or **DELETE LINE** soft key. The text is placed in the buffer memory
- Move the cursor to the location where you wish to insert the text, and press the **RESTORE LINE/WORD** soft key

Soft key	Function
DELETE LINE	Delete and temporarily store a line
DELETE WORD	Delete and temporarily store a word
DELETE CHAR	Delete and temporarily store a character
INSERT LINE / WORD	Insert a line or word from temporary storage

Editing text blocks

You can copy and erase text blocks of any size, and insert them at other locations. Before any of these actions, you must first select the desired text block:

- To select a text block: Move the cursor to the first character of the text you wish to select.

SELECT BLOCK

- Press the **SELECT BLOCK** soft key
- Move the cursor to the last character of the text you wish to select. You can select whole lines by moving the cursor up or down directly with the arrow keys—the selected text is shown in a different color

After selecting the desired text block, you can edit the text with the following soft keys:

Soft key	Function
CUT OUT BLOCK	Delete the selected block and store temporarily
INSERT BLOCK	Store the selected block temporarily without erasing (copy)

If desired, you can now insert the temporarily stored block at a different location:

- Move the cursor to the location where you want to insert the temporarily stored text block

INSERT BLOCK

- Press the **INSERT BLOCK** soft key: The text block is inserted.

You can insert the temporarily stored text block as often as desired

Transferring the selected block to a different file

- Select the text block as described previously

APPEND TO FILE

- Press the **APPEND TO FILE** soft key. The TNC displays the dialog prompt **file name**
- Enter the path and name of the destination file. The TNC appends the selected text to the specified file.

Inserting another file at the cursor position

- Move the cursor to the location in the text where you wish to insert another file

READ FILE

- Press the **READ FILE** soft key. The TNC displays the dialog prompt **File name =**
- Enter the path and name of the file you want to insert

Finding text sections

With the text editor, you can search for words or character strings in a text. Two functions are available:

Finding the current text

The search function is used for finding the next occurrence of the word in which the cursor is presently located:

- Move the cursor to the desired word.
- Select the search function: Press the **FIND** soft key
- Press the **FIND CURRENT WORD** soft key
- Exit the search function: Press the **END** soft key

Finding any text

- Select the search function: Press the **FIND** soft key. The TNC displays the dialog prompt **Find text:**
- Enter the text that you wish to find
- To find the text, press the **FIND** soft key.
- Exit the search function: Press the **END** soft key

12

Manual operation and setup

12.1 Switch-on, switch-off

Switch-on

Switch-on and crossing over the reference points can vary depending on the machine tool.

Refer to your machine manual.

Switch on the power supply for TNC and machine. The TNC then displays the following dialog:

SYSTEM STARTUP

- TNC is started

POWER INTERRUPTED

CE

- TNC message that the power was interrupted—clear the message

COMPILE A PLC PROGRAM

- The PLC program of the TNC is automatically compiled

RELAY EXT. DC VOLTAGE MISSING

I

- Switch on external dc voltage. The TNC checks the functioning of the EMERGENCY STOP circuit

MANUAL OPERATION
TRAVERSE REFERENCE POINTS

- Cross the reference points manually in the displayed sequence: For each axis press the machine START button, or

X+ Y+

- Cross the reference points in any sequence: Press and hold the machine axis direction button for each axis until the reference point has been traversed

If your machine is equipped with absolute encoders, you can leave out crossing the reference marks. In such a case, the TNC is ready for operation immediately after the machine control voltage is switched on.

The TNC is now ready for operation in the **Manual Operation** mode.

The reference points need only be crossed if the machine axes are to be moved. If you intend only to write, edit or test programs, you can select the **Programming** or **Test Run** mode of operation immediately after switching on the control voltage.

You can cross the reference points later by pressing the **PASS OVER REFERENCE** soft key in the **MANUAL OPERATION** mode.

Switch-off

Deactivation is a machine-dependent function.
Refer to your machine manual.

To prevent data from being lost at switch-off, you need to shut down the operating system of the TNC as follows:

- Select the **Manual Operation** mode

- Select the function for shutting down

- Confirm with the **SHUT DOWN** soft key
- When the TNC displays the message **Now you can switch off the TNC** in a pop-up window, you may cut off the power supply to the TNC

Caution: Data may be lost!

Inappropriate switch-off of the TNC can lead to data loss!

The control restarts after pressing the **RESTART** soft key. Switch-off during a restart can also result in data loss!

12.2 Moving the machine axes

Note

Traversing with the machine axis direction buttons can vary depending on the machine tool. Refer to your machine manual.

Moving the axis with the machine axis direction buttons

- Select the **Manual Operation** mode
- Press the machine axis direction button and hold it as long as you wish the axis to move, or
- Move the axis continuously: Press and hold the machine axis direction button, then press the machine START button
- Stop the axis: Press the machine STOP button

You can change the feed rate at which the axes are traversed with the **F** soft key, see "Spindle speed S, feed rate F and miscellaneous function M", page 300.

If a traverse task is active on the machine, the control displays the control-in-operation symbol.

Incremental jog positioning

With incremental jog positioning you can move a machine axis by a preset distance.

- Select the **Manual Operation** or **El. Handwheel** mode of operation
- Shift the soft-key row
- Select incremental jog positioning: Switch the **INCREMENT** soft key to ON

JOG INCREMENT =

- Enter the jog increment in mm, and confirm with the **ENT** key
- Press the machine axis direction button as often as desired

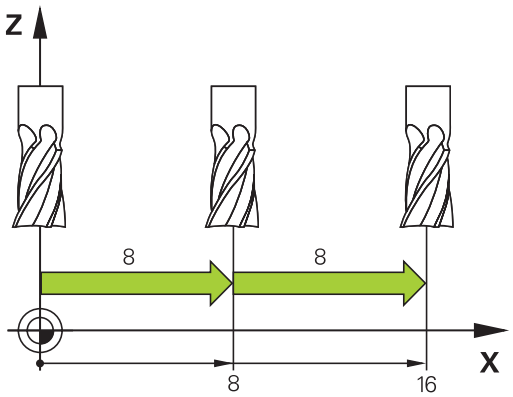

The maximum permissible value for infeed is 10 mm.

Traverse with the HR 410 electronic handwheel

The portable HR 410 handwheel is equipped with two permissive buttons. The permissive buttons are located below the star grip.

You can only move the machine axes when a permissive button is depressed (machine-dependent function).

The HR 410 handwheel features the following operating elements:

1 EMERGENCY STOP button
2 Handwheel
3 Permissive buttons
4 Axis address keys
5 Keys for defining the feed rate (slow, medium, fast; the feed rates are set by the machine tool builder)
6 Direction in which the TNC moves the selected axis
7 Machine functions (set by the machine tool builder)

Traversing axes

The red indicator lights show the axis and feed rate you have selected.

- ▶ Select the Electronic handwheel operating mode
- ▶ Press and hold a permissive button
- X ▶ Select the axis
- ▶ Select the feed rate
- + ▶ Move the active axis in the positive direction, or
- – ▶ Move the active axis in the negative direction

12.3 Spindle speed S, feed rate F and miscellaneous function M

Application

In the **Manual Operation** and **El. Handwheel** operating modes, you can enter the spindle speed S, feed rate F and the miscellaneous functions M with soft keys. The miscellaneous functions are described in page 266.

The machine tool builder determines which miscellaneous functions M are available on your control and what effects they have.

Entering values

Spindle speed S, miscellaneous function M

- Enter the spindle speed: Press the S soft key

SPINDLE SPEED S=

- Enter **1000** (spindle speed) and confirm your entry with the machine START button.

The spindle speed S with the entered rpm is started with a miscellaneous function M. Proceed in the same way to enter a miscellaneous function M.

Feed rate F

After entering a feed rate F, confirm your entry with the **ENT** key.

The following is valid for feed rate F:

- If you enter F=0, then the lowest feed rate from the machine parameter **manualFeed** is effective.
- If the feed rate entered exceeds the value defined in the machine parameter **maxFeed**, then the parameter value is effective.
- F is not lost during a power interruption
- The control displays the feed rate.

Adjusting spindle speed and feed rate

With the override knobs you can vary the spindle speed S and feed rate F from 0% to 150% of the set value.

The override knob for spindle speed is only functional on machines with infinitely variable spindle drive.

12.4 Datum management with the preset table

Note

You should definitely use the preset table if:

- Up to now you have been working with older TNC controls with REF-based datum tables

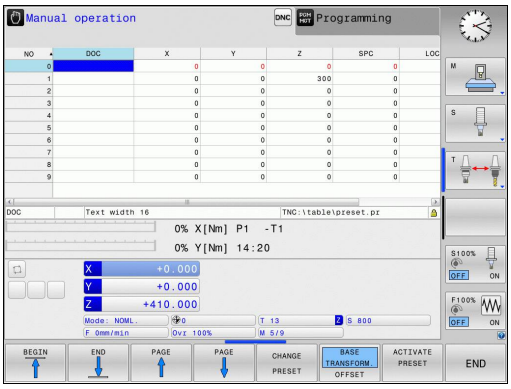

The preset table can contain any number of lines (datums). To optimize the file size and the processing speed, you should use only as many lines as you need for preset management.

For safety reasons, new lines can be inserted only at the end of the preset table.

Saving the datums in the preset table

The preset table has the name **PRESET.PR**, and is saved in the directory **TNC:\table**. **PRESET.PR** is editable in the **Manual Operation** and **El. Handwheel** modes only if the **CHANGE PRESET** soft key was pressed. You can open the **PRESET.PR** preset table in the **Programming** mode of operation, but you cannot edit it.

It is permitted to copy the preset table into another directory (for data backup). Lines are also always write-protected in the copied tables. You therefore cannot edit them.

Never change the number of lines in the copied tables! That could cause problems when you want to reactivate the table.

To activate the preset table copied to another directory you have to copy it back to the directory **TNC:**table\.

There are several methods for saving datums and/or basic rotations in the preset table:

- Via touch probe cycles in the **Manual Operation** and **El. Handwheel** modes
- Manual entry (see description below)

The line 0 in the preset table is write protected. In line 0, the TNC always saves the datum that you most recently set manually via the axis keys or via soft key. If the datum set manually is active, the TNC displays the text **PR MAN(0)** in the status display.

Manually saving the datums in the preset table

In order to save datums in the preset table, proceed as follows:

- Select the **Manual Operation** mode
- Move the tool slowly until it touches (scratches) the workpiece surface, or position the measuring dial correspondingly
- Display the preset table: The TNC opens the preset table and sets the cursor to the active table row
- Select functions for entering the presets: The TNC displays the available possibilities for entry in the soft-key row. See the table below for a description of the entry possibilities
- Select the line in the preset table that you want to change (the line number is the preset number)
- If needed, select the column (axis) in the preset table that you want to change
- Use the soft keys to select one of the available entry possibilities (see the following table)

Soft key	Function
	Directly transfer the actual position of the tool (the measuring dial) as the new preset: This function only saves the preset in the axis which is currently highlighted
ENTER NEW PRESET	Assign any value to the actual position of the tool (the measuring dial): This function only saves the preset in the axis which is currently highlighted. Enter the desired value in the pop-up window
CORRECT THE PRESET	Incrementally shift a preset already stored in the table: This function only saves the preset in the axis which is currently highlighted. Enter the desired corrective value with the correct sign in the pop-up window. If inch display is active: Enter the value in inches, and the TNC will internally convert the entered values to mm
SAVE PRESET	Write the currently active datum to a selectable line in the table: This function saves the datum in all axes, and then activates the appropriate row in the table automatically. If inch display is active: Enter the value in inches, and the TNC will internally convert the entered values to mm

Editing the preset table

Soft key	Editing function in table mode
BEGIN	Select the table start
END	Select the table end
PAGE	Select the previous page in the table
PAGE	Select the next page in the table
CHANGE PRESET	Select the functions for preset entry
ACTIVATE PRESET	Activate the datum of the selected line of the preset table
APPEND N LINES	Add the entered number of lines to the end of the table (2nd soft-key row)
COPY FIELD	Copy the highlighted field (2nd soft-key row)
PASTE FIELD	Insert the copied field (2nd soft-key row)
RESET LINE	Reset the selected line: The TNC enters - in all columns (2nd soft-key row)
INSERT LINE	Insert a single line at the end of the table (2nd soft-key row)
DELETE LINE	Delete a single line at the end of the table (2nd soft-key row)

Overwrite protection for datum

The line 0 in the preset table is write protected. The TNC saves the last manually set datum in line 0.

You can overwrite-protect further lines in the preset table with the **LOCKED** column. The overwrite-protected lines are color-highlighted in the preset table.

> **!** **Caution: Data may be lost!**
>
> If you forget the password, you can no longer reset the write-protection of a password-protected line.
>
> Make note of the password when you password-protect lines.
>
> Preferentially use simple protection with the soft key.

Proceed as follows to protect a datum from overwriting:

CHANGE PRESET

- Press the **CHANGE PRESET** soft key

→

- Select the **LOCKED** column

EDIT CURRENT FIELD

- Press the **EDIT CURRENT FIELD** soft key

Protection for datum without using password:

LOCK / UNLOCK

- Press the soft key. The TNC writes an **L** in the LOCKED column.

Protection for datum with password:

LOCK / UNLOCK PASSWORD

- Press the soft key
- Enter the password into the pop-up window

OK

- Confirm with the **OK** soft key or the **ENT** key: The TNC writes **###** in the LOCKED column.

Rescind write-protection

To edit a line you have previously write-protected, proceed as follows:

CHANGE PRESET

- Press the **CHANGE PRESET** soft key

→

- Select the **LOCKED** column

EDIT CURRENT FIELD

- Press the **EDIT CURRENT FIELD** soft key

Datum protected without password:

LOCK / UNLOCK

- Press the soft key. The TNC rescinds write-protection.

Datum protected with password:

LOCK / UNLOCK PASSWORD

- Press the soft key

- Enter the password into the pop-up window

OK

- Confirm with the **OK** soft key or the **ENT** key: The TNC rescinds write-protection.

Activating the datum

Activating a datum from the preset table in the Manual Operation mode

When activating a datum from the preset table, the TNC resets the active datum shift, mirroring and scaling factor.

- Select the **Manual Operation** mode
- Display the preset table
- Select the datum number you want to activate, or
- With the GOTO key, select the datum number that you want to activate. Confirm with the ENT key
- Activate the datum
- Confirm activation of the datum. The TNC sets the display and—if defined—the basic rotation
- Exit the preset table

Activating a datum from the preset table in an NC program

Use Cycle 247 in order to activate datums from the preset table during program run. In Cycle 247 you simply define the number of the datum to be activated.

12.5 Datum setting without a 3-D touch probe

Note

Setting the datum with a 3-D touch probe: see "Datum setting with 3-D touch probe (option 17)", page 323.

You fix a datum by setting the TNC position display to the coordinates of a known position on the workpiece.

Preparation

- Clamp and align the workpiece
- Insert the zero tool with known radius into the spindle
- Ensure that the TNC is showing the actual position values

Setting datum with an end mill

Protective measure

If the workpiece surface must not be scratched, you can lay a metal shim of known thickness d on it. Then enter a tool axis datum value that is larger than the desired datum by the value d.

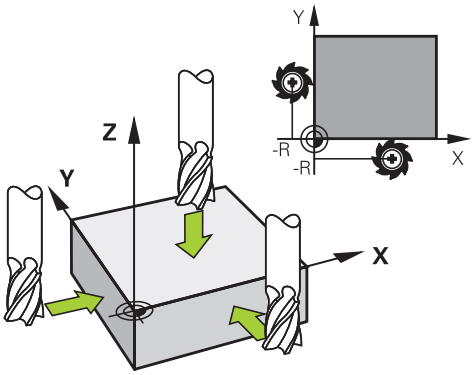

- Select the **Manual Operation** mode

X+ Y+ Z–

- Move the tool slowly until it touches (scratches) the workpiece surface

Z

- Select the axis

DATUM SETTING Z=

0 ENT

- Zero tool in spindle axis: Set the display to a known workpiece position (e.g. 0) or enter the thickness d of the shim. In the tool axis, offset the tool radius

Repeat the process for the remaining axes.

If you are using a preset tool, set the display of the tool axis to the length L of the tool or enter the sum Z=L+d

The TNC automatically saves the datum set with the axis keys in line 0 of the preset table.

Using touch probe functions with mechanical probes or measuring dials

If you do not have an electronic 3-D touch probe on your machine, you can also use all the previously described manual touch probe functions (exception: calibration function) with mechanical probes or by simply touching the workpiece with the tool, see page 311.

In place of the electronic signal generated automatically by a 3-D touch probe during probing, you can manually initiate the trigger signal for capturing the **probing position** by pressing a key. Proceed as follows:

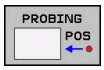

- Select any touch probe function by soft key
- Move the mechanical probe to the first position to be captured by the TNC

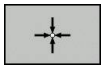

- Confirm the position: Press the actual-position-capture soft key for the TNC to save the current position
- Move the mechanical probe to the next position to be captured by the TNC

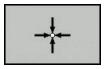

- Confirm the position: Press the actual-position-capture soft key for the TNC to save the current position
- If required, move to additional positions and capture as described previously
- **Datum**: In the menu window, enter the coordinates of the new datum, confirm with the **SET DATUM** soft key, or write the values to a table (see "Writing measured values from the touch probe cycles in a datum table", page 316, or see "Writing measured values from the touch probe cycles in the preset table", page 317)
- Terminate the probing function: Press the **END** key

12.6 Using 3-D touch probes (option 17)

Overview

The following touch probe cycles are available in the **Manual Operation** mode:

HEIDENHAIN only gives warranty for the function of the probing cycles if HEIDENHAIN touch probes are used.

The TNC must be specially prepared by the machine tool builder for the use of a 3-D touch probe. Refer to your machine manual.

The touch probe cycles are available only with option number 17. If you are using a HEIDENHAIN touch probe, this option is available automatically.

Soft key	Function	Page
CALIBRATE TS	Calibrating the 3-D touch probe	318
PROBING POS	Setting a datum in any axis	323
PROBING CC	Setting a circle center as datum	324
PROBING CL	Setting the centerline as datum	326
TCH PROBE TABLE	Touch probe system data management	496

Functions in touch probe cycles

Soft keys that are used to select the probing direction or a probing routine are displayed in the manual touch probe cycles. The soft keys displayed vary depending on the respective cycle:

Soft key	Function
X +	Select the probing direction
	Capture the actual position
	Probe hole (inside circle) automatically
	Probe stud (outside circle) automatically
	Select axis-parallel probing direction for automatic probing of holes or studs

Automatic probing routine for holes and studs

> **!** If you use a function for probing a circle automatically, the TNC automatically positions the touch probe to the respective touch points. Ensure that the positions can be approached without collision.

If you use a probing routine for probing a hole or a stud automatically, the TNC opens a form with the required input fields.

Input fields in the Measure stud and Measure hole forms

Input field	Function
Stud diameter? or **Hole diameter?**	Diameter of probe contact (optional for holes)
Safety clearance?	Distance to the probe contact in the plane
Incr. clearance height?	Positioning of touch probe in spindle axis direction (starting from the current position)

Position the touch probe approximately in the center of the hole (inside circle) or near the first touch point on the stud (outside circle), and select the soft key for the first probing direction. Once you press the machine START button to start the touch probe cycle, the TNC automatically performs all prepositioning movements and probing operations.

The TNC positions the touch probe to the individual touch points, taking the safety clearance into account. If a clearance height has been defined, the TNC positions the touch probe to clearance height in the spindle axis beforehand.

The TNC approaches the position at the feed rate **FMAX** defined in the touch probe table. The defined probing feed rate **F** is used for the actual probing operation.

Before starting the automatic probing routine, you need to preposition the touch probe near the first touch point. Offset the touch probe by approximately the safety clearance (value from touch probe table + value from input form) opposite to the probing direction.

Selecting touch probe cycles

- Select the **Manual Operation** or **El. Handwheel** mode of operation

- Select the touch probe functions by pressing the **TOUCH PROBE** soft key. The TNC displays additional soft keys (see overview table).

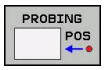

- Select the touch probe cycle by pressing the appropriate soft key, for example **PROBING POS**, for the TNC to display the associated menu

When you select a manual probing function, the TNC opens a form displaying all data required. The content of the forms varies depending on the respective function.

You can also enter values in some of the fields. Use the arrow keys to move to the desired input field. You can position the cursor only in fields that can be edited. Fields that cannot be edited appear dimmed.

Recording measured values from the touch-probe cycles

The TNC must be specially prepared by the machine tool builder for use of this function. Refer to your machine manual.

After executing any selected touch probe cycle, the TNC displays the soft key **WRITE LOG TO FILE**. If you press this soft key, the TNC will record the current values determined in the active touch probe cycle.

If you store the measuring results, the TNC creates the text file TCHPRMAN.TXT. If you have not defined a path in the machine parameter **fn16DefaultPath**, the TNC will store the TCHPRMAN.TXT and TCHPRMAN.html files in the main directory **TNC:**.

The TNC writes the measured values to the TCHPRMAN.TXT file. If you run several touch probes cycles in a row, the TNC adds the data to the existing log.

Format and content of the TCHPRMAN.TXT file are preset by the machine tool builder.

Writing measured values from the touch probe cycles in a datum table

Use this function if you want to save measured values in the workpiece coordinate system. If you want to save measured values in the machine-based coordinate system (REF coordinates), press the **ENTER IN PRESET TABLE SOFT KEY,** see "Writing measured values from the touch probe cycles in the preset table", page 317.

With the **ENTER IN DATUM TABLE** soft key, the TNC can write the values measured during a touch probe cycle in a datum table:

- Select any probe function
- Enter the desired coordinates of the datum in the appropriate input boxes (depends on the touch probe cycle being run)
- Enter the datum number in the **Number in table=** input box
- Press the **ENTER IN DATUM TABLE** soft key. The TNC saves the datum in the indicated datum table under the entered number

Writing measured values from the touch probe cycles in the preset table

> Use this function if you want to save measured values in the machine-based coordinate system (REF coordinates). If you want to save measured values in the workpiece coordinate system, use the **ENTER IN DATUM TABLE SOFT KEY,** see "Writing measured values from the touch probe cycles in a datum table", page 316.

With the **ENTER IN PRESET TABLE** soft key, the TNC can write the values measured during a probe cycle in the preset table. The measured values are then stored referenced to the machine-based coordinate system (REF coordinates). The preset table has the name PRESET.PR, and is saved in the directory TNC:\table\.

- Select any probe function
- Enter the desired coordinates of the datum in the appropriate input boxes (depends on the touch probe cycle being run)
- Enter the preset number in the **Number in table:** input box
- Press the **ENTER IN PRESET TABLE** soft key. The TNC saves the datum in the preset table under the entered number

12.7 Calibrating a 3-D touch trigger probe (option 17)

Introduction

In order to precisely specify the actual trigger point of a 3-D touch probe, you must calibrate the touch probe, otherwise the TNC cannot provide precise measuring results.

Always calibrate a touch probe in the following cases:
- Commissioning
- Stylus breakage
- Stylus exchange
- Change in the probe feed rate
- Irregularities caused, for example, when the machine heats up
- Change of active tool axis

When you press the **OK** soft key after calibration, the calibration values are applied to the active touch probe. The updated tool data become effective immediately, and a new tool call is not necessary.

During calibration, the TNC finds the effective length of the stylus and the effective radius of the ball tip. To calibrate the 3-D touch probe, clamp a ring gauge or a stud of known height and known radius to the machine table.

The TNC provides calibration cycles for calibrating the length and the radius:

- Press the **TOUCH PROBE** soft key

- Display the calibration cycles: Press **CALIBRATE TS**.
- Select the calibration cycle

Calibration cycles of the TNC

Soft key	Function	Page
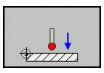	Calibrating the length	319
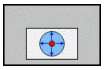	Measure the radius and the center offset using a calibration ring	page 321
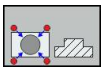	Measure the radius and the center offset using a stud or a calibration pin	page 321
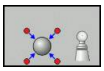	Measure the radius and the center offset using a calibration sphere	page 322

Calibrating the effective length

HEIDENHAIN only gives warranty for the function of the probing cycles if HEIDENHAIN touch probes are used.

The effective length of the touch probe is always referenced to the tool datum. The machine tool builder usually defines the spindle tip as the tool datum.

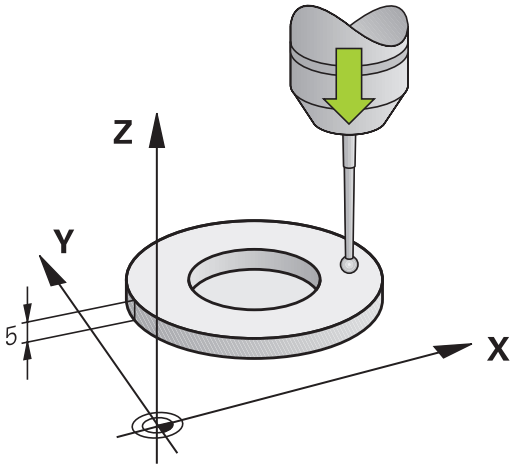

- Set the datum in the spindle axis such that for the machine tool table Z=0.

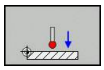

- Select the calibration function for the touch probe length: Press the **CAL. L** soft key. The TNC displays the current calibration data.
- Datum for length: Enter the height of the ring gauge in the menu window
- Move the touch probe to a position just above the ring gauge
- To change the traverse direction (if necessary), press a soft key or an arrow key
- To probe the upper surface of the ring gauge, press the machine START button
- Checking the results
- Press the **OK** soft key for the values to take effect
- Press the **CANCEL** soft key to terminate the calibrating function. The TNC logs the calibration process in TCHPRMAN.html.

Calibrating the effective radius and compensating center misalignment

> **!** HEIDENHAIN only gives warranty for the function of the probing cycles if HEIDENHAIN touch probes are used.

> ⇨ The center offset can be determined only with a suitable touch probe.
> If you want to calibrate using the outside of an object, you need to preposition the touch probe above the center of the calibration sphere or calibration pin. Ensure that the touch points can be approached without collision.

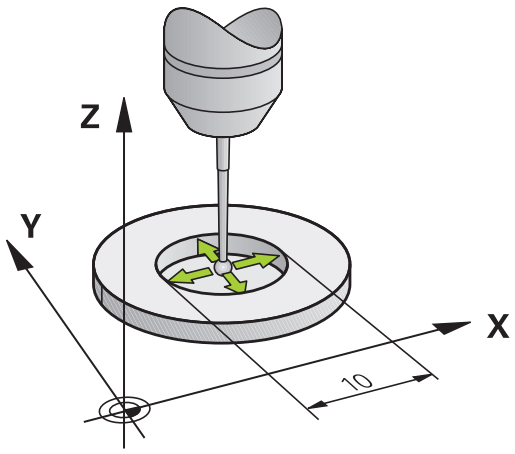

When calibrating the ball tip radius, the TNC executes an automatic probing routine. During the first probing cycle, the TNC determines the center of the calibration ring or stud (coarse measurement) and positions the touch probe in the center. Then the ball tip radius is determined during the actual calibration process (fine measurement). If the touch probe allows probing from opposite orientations, the center offset is determined during another cycle.

The characteristic of whether and how your touch probe can be oriented is already defined in HEIDENHAIN touch probes. Other touch probes are configured by the machine tool builder.

The calibration routine varies depending on how your touch probe can be oriented:

- No orientation possible or orientation possible in only one direction: The TNC executes one approximate and one fine measurement and determines the effective ball tip radius (column R in tool.t)
- Orientation possible in two directions (e.g.. HEIDENHAIN touch probes with cable): The TNC executes one approximate and one fine measurement, rotates the touch probe by 180° and then executes one more probing operation. The center offset (CAL_OF in tchprobe.tp) is determined in addition to the radius by probing from opposite orientations.
- Any orientation possible (e.g. HEIDENHAIN infrared touch probes): For probing routine, see "orientation possible in two directions."

Calibration using a calibration ring

Proceed as follows for manual calibration using a calibration ring:

- In the **Manual Operation** mode, position the ball tip inside the bore of the ring gauge

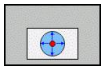

- Select the calibration function: Press the **CAL. R** soft key. The TNC displays the current calibration data.
- Enter the diameter of the ring gauge
- Start the probing procedure: Press the machine START button. The 3-D touch probe probes all required touch points in an automatic probing routine and calculates the effective ball-tip radius. If probing from opposite orientations is possible, the TNC calculates the center offset
- Checking the results
- Press the **OK** soft key for the values to take effect
- Press the **END** soft key to terminate the calibrating function. The TNC logs the calibration process in TCHPRMAN.html.

In order to be able to determine the ball-tip center misalignment, the TNC needs to be specially prepared by the machine manufacturer. Refer to your machine manual.

Calibration with a stud or calibration pin

Proceed as follows for manual calibration with a stud or calibration pin:

- In the **Manual operation** mode, position the ball tip above the center of the calibration pin

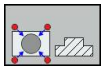

- Select the calibration function: Press the **CAL. R** soft key
- Enter the diameter of the stud
- Enter the safety clearance
- Start the probing procedure: Press the machine START button. The 3-D touch probe probes all required touch points in an automatic probing routine and calculates the effective ball-tip radius. If probing from opposite orientations is possible, the TNC calculates the center offset
- Checking the results
- Press the **OK** soft key for the values to take effect
- Press the **END** soft key to terminate the calibrating function. The TNC logs the calibration process in TCHPRMAN.html.

In order to be able to determine the ball-tip center misalignment, the TNC needs to be specially prepared by the machine manufacturer.

Refer to your machine manual.

Calibration using a calibration sphere

Proceed as follows for manual calibration using a calibration sphere:

- In the **Manual Operation** mode, position the ball tip above the center of the calibration sphere

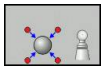

- Select the calibration function: Press the **CAL. R** soft key
- Enter the diameter of the sphere
- Enter the safety clearance
- Select Length measurement, if applicable
- Enter Datum for length, if applicable
- Start the probing procedure: Press the machine START button. The 3-D touch probe probes all required touch points in an automatic probing routine and calculates the effective ball-tip radius. If probing from opposite orientations is possible, the TNC calculates the center offset
- Checking the results
- Press the **OK** soft key for the values to take effect
- Press the **END** soft key to terminate the calibrating function. The TNC logs the calibration process in TCHPRMAN.html.

In order to be able to determine the ball-tip center misalignment, the TNC needs to be specially prepared by the machine manufacturer.

Refer to your machine manual.

Displaying calibration values

The TNC saves the effective length and effective radius of the touch probe in the tool table. The TNC saves the ball-tip center misalignment in the touch-probe table, in the **CAL_OF1** (principal axis) and **CAL_OF2** (minor axis) columns. You can display the values on the screen by pressing the **TOUCH PROBE TABLE** soft key.

During calibration, the TNC automatically creates the TCHPRMAN.html log file to which the calibration values are saved.

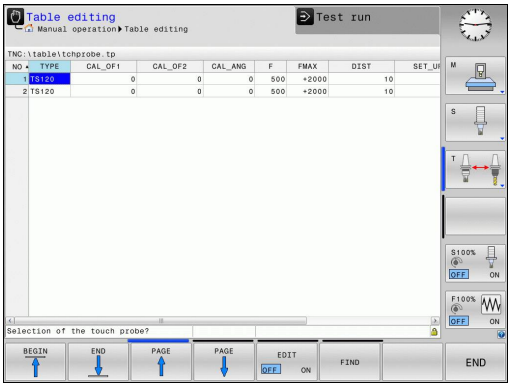

Make sure that you have activated the correct tool number before using the touch probe, regardless of whether you wish to run the touch probe cycle in automatic mode or in the **Manual Operation** operating mode.

12.8 Datum setting with 3-D touch probe (option 17)

Overview

The following soft-key functions are available for setting the datum on an aligned workpiece:

Soft key	Function	Page
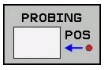	Datum setting in any axis with	323
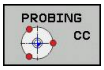	Setting a circle center as datum	324
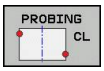	Center line as datum Setting the center line as datum	326

> **!** HEIDENHAIN only gives warranty for the function of the probing cycles if HEIDENHAIN touch probes are used.

Datum setting in any axis

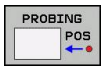

- Select the probing function: Press the **PROBING POS** soft key
- Move the touch probe to a position near the touch point
- Use the soft keys to select the probe axis and direction in which you want to set the preset, such as Z in direction Z–
- Start the probing procedure: Press the machine START button
- **Datum**: Enter the nominal coordinate and confirm your entry with the **SET DATUM** soft key, see "Writing measured values from the touch probe cycles in a datum table", page 316
- To terminate the probe function, press the **END** soft key

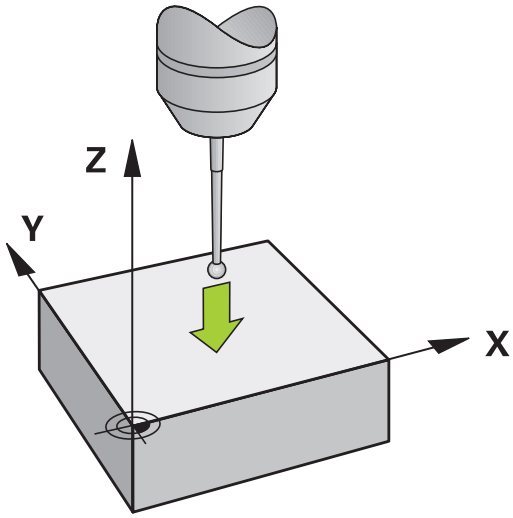

Circle center as datum

With this function, you can set the datum at the center of bore holes, circular pockets, cylinders, studs, circular islands, etc.

Inside circle:

The TNC probes the inside wall of a circle in all four coordinate axis directions.

For incomplete circles (circular arcs) you can choose the appropriate probing direction.

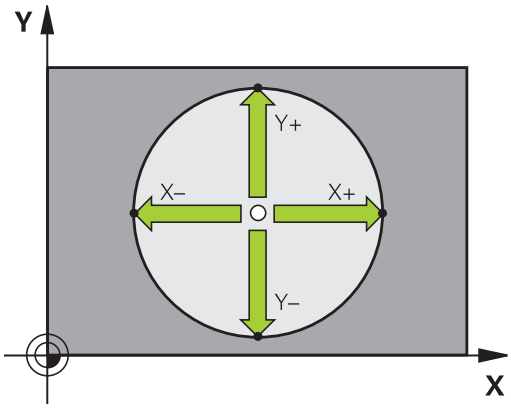

- Position the touch probe approximately in the center of the circle

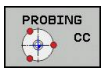

- Select the touch probe function: Press the **PROBING CC** soft key
- Select the probing direction or press the soft key for the automatic probing routine
- Probing: Press the machine START button. The touch probe probes the inside wall of the circle in the selected direction. If you are not using the automatic probing routine, you need to repeat this procedure. After the third probing operation, you can have the TNC calculate the center (four touch points are recommended)
- Terminate the probing procedure and switch to the evaluation menu: Press the **EVALUATE** soft key
- **Datum**: In the menu window, enter both coordinates of the circle center, confirm with the **SET DATUM** soft key, or write the values to a table (see "Writing measured values from the touch probe cycles in a datum table", page 316, or see "Writing measured values from the touch probe cycles in the preset table", page 317)
- Terminate the probing function: Press the **END** soft key

> The TNC needs only three touch points to calculate outside or inside circles, e.g. for circle segments. More precise results are obtained if you measure circles using four touch points, however. You should always preposition the touch probe in the center, or as close to the center as possible.

Outside circle:

- Position the touch probe at a position near the first touch point outside of the circle
- Select the probing direction or press the soft key for the automatic probing routine
- Probing: Press the machine START button. If you are not using the automatic probing routine, you need to repeat this procedure. After the third probing operation, you can have the TNC calculate the center (four touch points are recommended)
- Terminate the probing procedure and switch to the evaluation menu: Press the **EVALUATE** soft key
- **Datum**: Enter the coordinates of the datum and confirm your entry with the **SET DATUM** soft key, or write the values to a table (see "Writing measured values from the touch probe cycles in a datum table", page 316, or see "Writing measured values from the touch probe cycles in the preset table", page 317)
- To terminate the probe function, press the **END** soft key

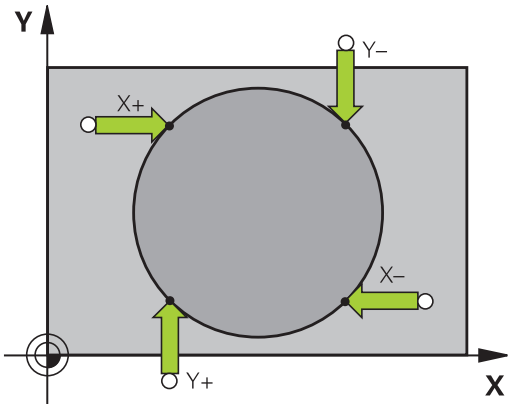

After the probing procedure is completed, the TNC displays the current coordinates of the circle center and the circle radius PR.

Setting the datum using multiple holes/cylindrical studs

A second soft-key row provides a soft key for using multiple holes or cylindrical studs to set the datum. You can set the intersection of two or more elements as datum.

Select the probing function for the intersection of holes/cylindrical studs:

- Select the touch probe function: Press the **PROBING CC** soft key

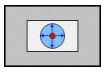

- Hole is to be probed automatically: Define by soft key

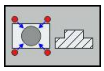

- Circular stud is to be probed automatically: Define by soft key

Preposition the touch probe approximately in the center of the hole or near the first touch point of the circular stud. After you have pressed the NC Start key, the TNC automatically probes the points on the circle.

Move the touch probe to the next hole, repeat the probing operation and have the TNC repeat the probing procedure until all the holes have been probed to set the datum.

Setting the datum in the intersection of multiple holes:

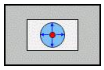

- Preposition the touch probe approximately in the center of the hole
- Hole is to be probed automatically: Define by soft key
- To probe the workpiece, press the machine START button. The touch probe probes the circle automatically.
- Repeat the probing procedure for the remaining elements
- Terminate the probing procedure and switch to the evaluation menu: Press the **EVALUATE** soft key
- **Datum**: In the menu window, enter both coordinates of the circle center, confirm with the **SET DATUM** soft key, or write the values to a table (see "Writing measured values from the touch probe cycles in a datum table", page 316, or see "Writing measured values from the touch probe cycles in the preset table", page 317)
- Terminate the probing function: Press the **END** soft key

Setting a center line as datum

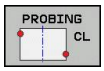

- Select the probing function: Press the **PROBING CL** soft key
- Position the touch probe at a position near the first touch point
- Select the probing direction by soft key
- Start the probing procedure: Press the NC Start button
- Position the touch probe at a position near the second touch point
- Start the probing procedure: Press the NC Start button
- **Datum**: Enter the coordinate of the datum in the menu window, confirm with the **SET DATUM** soft key, or write the value to a table (see "Writing measured values from the touch probe cycles in a datum table", page 316, or see "Writing measured values from the touch probe cycles in the preset table", page 317.
- Terminate the probing function: Press the **END** soft key

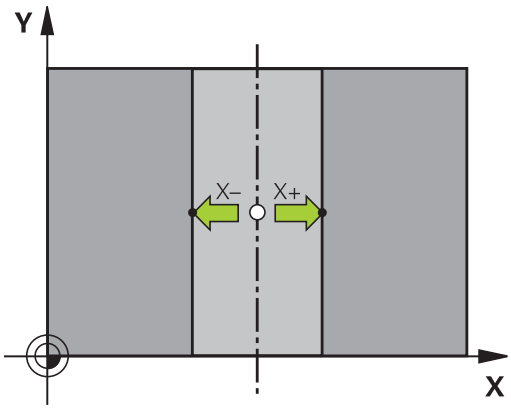

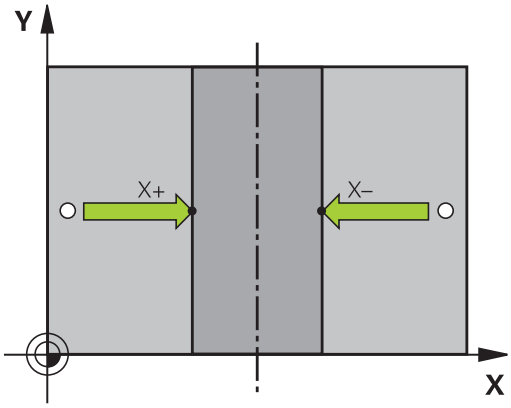

After you have measured the second touch point, you can use the evaluation menu to change the direction of the centerline. You can choose by soft key whether the datum or zero point should be set in the reference axis, minor axis or tool axis. This can be necessary if, for example, you would like to save the measured position in the reference and minor axis.

Measuring workpieces with a 3-D touch probe

You can also use the touch probe in the **Manual Operation** and **El. Handwheel** operating modes to make simple measurements on the workpiece. With a 3-D touch probe you can determine:

- Position coordinates, and from them,
- Dimensions on the workpiece

Finding the coordinates of a position on an aligned workpiece

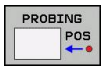

- Select the probing function: Press the **PROBING POS** soft key
- Move the touch probe to a position near the touch point
- Select the probe direction and axis of the coordinate. Use the corresponding soft keys for selection
- Start the probing procedure: Press the machine START button

The TNC shows the coordinates of the touch point as reference point.

Measuring workpiece dimensions

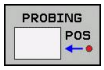

- Select the probing function: Press the **PROBING POS** soft key
- Position the touch probe at a position near the first touch point A
- Select the probing direction by soft key
- Start the probing procedure: Press the machine START button
- If you need the current datum later, write down the value that appears in the Datum display
- Datum: Enter "0"
- Cancel the dialog: Press the **END** key
- Select the probing function again: Press the **PROBING POS** soft key
- Position the touch probe at a position near the second touch point B
- Select the probe direction with the soft keys: Same axis but from the opposite direction
- Start the probing procedure: Press the machine START button

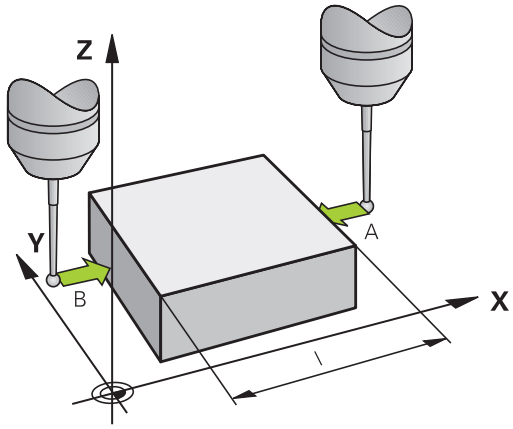

The value displayed as datum is the distance between the two points on the coordinate axis.

To return to the datum that was active before the length measurement:

- Select the probing function: Press the **PROBING POS** soft key
- Probe the first touch point again
- Set the datum to the value that you wrote down previously
- Cancel the dialog: Press the **END** key

13

Positioning with Manual Data Input

13.1 Programming and executing simple machining operations

The **Positioning with Manual Data Input** mode of operation is particularly convenient for simple machining operations or to pre-position the tool. It enables you to write a short program in HEIDENHAIN conversational programming and execute it immediately. You can also call TNC cycles. The program is stored in the file $MDI. In the **Positioning with MDI** mode of operation, the additional status display can also be activated.

Positioning with manual data input (MDI)

Limitation

The following functions are not available in the **Positioning with MDI** operating mode:

- Program section repeats
- Subprogramming
- Path compensations
- The programming graphics
- Program call **PGM CALL**
- The program-run graphics

- Select the **Positioning with MDI** mode of operation. Program the file $MDI as you wish

- To start program run, press the machine START button.

Example 1

A hole with a depth of 20 mm is to be drilled into a single workpiece. After clamping and aligning the workpiece and setting the datum, you can program and execute the drilling operation in a few lines.

First you pre-position the tool with straight-line blocks to the hole center coordinates at a setup clearance of 5 mm above the workpiece surface. Then drill the hole with Cycle **200 DRILLING**.

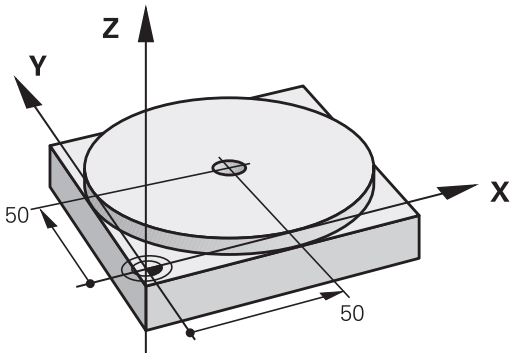

0 BEGIN PGM $MDI MM		
1 TOOL CALL 1 Z S2000		Call the tool: tool axis Z,
		spindle speed 2000 rpm
2 Z+200 R0 FMAX		Retract the tool (F MAX = rapid traverse)
3 Y+50 R0 FMAX M3		Move the tool at F MAX to a position above the hole, spindle on
4 X+50 R0 FMAX		Move the tool at F MAX to a position above the hole
5 CYCL DEF 200		Define the DRILLING cycle
Q200=5	**;SET-UP CLEARANCE**	Set-up clearance of the tool above the hole
Q201=-15	**;DEPTH**	Hole depth (algebraic sign=working direction)
Q206=250	**;FEED RATE FOR PLNGNG**	Feed rate for drilling
Q202=5	**;**	Depth of each infeed before retraction
Q210=0	**;DWELL TIME AT TOP**	Dwell time after every retraction in seconds
Q203=-10	**;SURFACE COORDINATE**	Coordinate of the workpiece surface
Q204=20	**;2ND SET-UP CLEARANCE**	Set-up clearance of the tool above the hole
Q211=0.2	**;DWELL TIME AT DEPTH**	Dwell time in seconds at the hole bottom
Q395=0	**;**	Depth referenced to the tool tip or the cylindrical part of the tool
6 CYCL CALL		Call the DRILLING cycle
7Z+200 R0 FMAX M2		Retract the tool
8 END PGM $MDI MM		End of program

DRILLING cycle: see page 415.

Protecting and erasing programs in $MDI

The $MDI file is generally intended for short programs that are only needed temporarily. Nevertheless, you can store a program, if necessary, by proceeding as described below:

- Select the **Programming** mode of operation
- To call the file manager, press the **PGM MGT** key.
- Move the highlight to the **$MD** file
- Copy a file: Press the **COPY** soft key

DESTINATION FILE =

- Enter the name under which you want to save the current contents of the $MDI file, e.g. **BORE**.
- Press the **OK** soft key
- Close the file manager: **END** soft key

For more information: see "Copying a single file", page 105.

14

Test run and program run

14.1 Graphics

Application

In the **Program Run, Single Block** and **Program Run, Full Sequence** operating modes as well as in the **Test Run** operating mode, the TNC simulates the machining of the workpiece.

The TNC features the following views:

- Plan view
- Projection in three planes
- 3-D view

> In the **Test Run** operating mode, you can also use the 3-D line graphics.

The TNC graphic depicts the workpiece as if it were being machined with a cylindrical end mill.

If a tool table is active, the TNC also considers the entries in the LCUTS, T-ANGLE and R2 columns.

The TNC will not show a graphic if

- the current program has no valid workpiece blank definition
- no program is selected
- if the BLK FORM block was not yet executed during the workpiece blank definition with the aid of a subprogram

Speed of the setting test runs

The most recently set speed stays active until a power interruption. After the control is switched on the speed is set to FMAX.

After you have started a program, the TNC displays the following soft keys with which you can set the simulation speed:

Soft key	Functions
	Perform the test run at the same speed at which the program will be run (programmed feed rates are taken into account)
	Increase the simulation speed incrementally
	Decrease the simulation speed incrementally
	Test run at the maximum possible speed (default setting)

You can also set the simulation speed before you start a program:

- Select the function for setting the simulation speed

- Select the desired function by soft key, e.g. incrementally increasing the simulation speed

Overview: Display modes

In the **Program Run, Single Block** and **Program Run, Full Sequence** operating modes as well as in the **Test Run** operating mode, the TNC displays the following soft keys:

Soft key	View
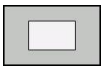	Plan view
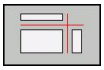	Projection in three planes
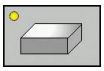	3-D view

The position of the soft keys depends on the selected operating mode.

The **Test Run** operating mode additionally offers the following views:

Soft key	View
	Volume view
	Volume view and tool paths
	Tool paths

Limitations during program run

The result of the simulation can be faulty if the TNC's computer is overloaded with complicated processing tasks.

Plan view

Select the plan view in the **Test Run** operating mode:

- Press the **FURTHER VIEW OPTIONS** soft key

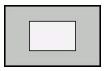

- Press the plan-view soft key

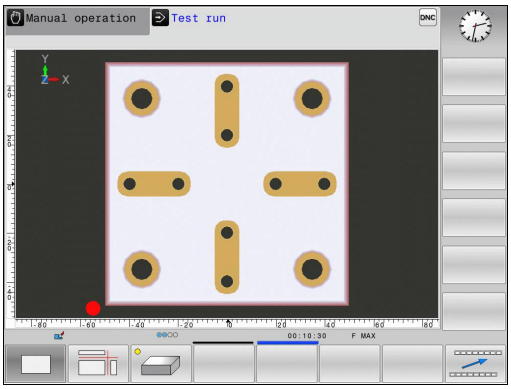

Select the plan view in the **Program Run, Single Block** and **Program Run, Full Sequence** operating modes:

- Press the **GRAPHICS** soft key

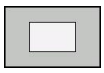

- Press the plan-view soft key

Projection in three planes

The simulation shows three sectional planes and a 3-D model, similar to a technical drawing.

Select projection in three planes in the **Test Run** operating mode:

- Press the **FURTHER VIEW OPTIONS** soft key

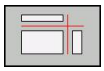

- Press the view-in-three-planes soft key

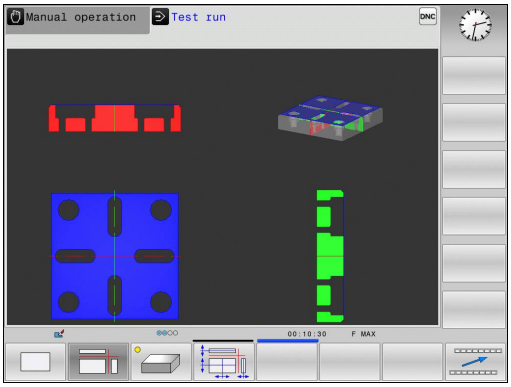

Select projection in three planes in the **Program Run, Single Block** and **Program Run, Full Sequence** operating modes:

- Press the **FURTHER VIEW OPTIONS** soft key

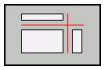

- Press the view-in-three-planes soft key

Move the sectional planes

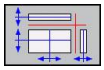

- Select the functions for shifting the sectional plane. The TNC offers the following soft keys:

Soft keys	Function
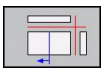 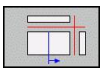	Shift the vertical sectional plane to the right or left
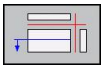 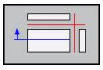	Shift the vertical sectional plane forward or backward
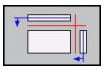 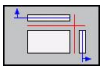	Shift the horizontal sectional plane upwards or downwards

The position of the sectional planes is visible during shifting.

The default setting of the sectional plane is selected so that it lies in the working plane in the workpiece center and in the tool axis on the top surface.

Return sectional planes to default setting:

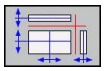

- Select the function for resetting the sectional planes.

3-D view

Choose 3-D view:

The high-resolution 3-D view enables you to display the surface of the machined workpiece in greater detail. With a simulated light source, the TNC creates realistic light and shadow conditions.

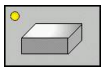

- Press the 3-D view soft key

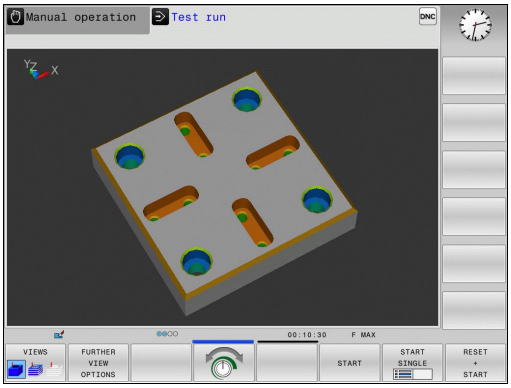

Rotating, enlarging, reducing and shifting the 3-D view

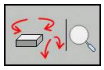

- Select the functions for rotating and enlarging/reducing: The TNC displays the following soft keys:

Soft keys	Function
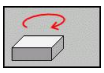 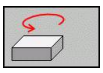	Rotate in 5° steps about the vertical axis
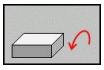 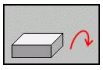	Tilt in 5° steps about the horizontal axis
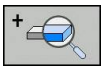	Enlarge the graphic stepwise
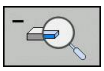	Reduce the graphic stepwise
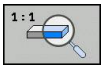	Reset the graphic to its original size and angle

- Shift the soft-key row

Soft keys	Function
 	Move the graphic upward or downward
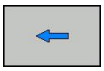 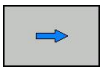	Move the graphic to the left or right
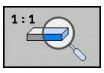	Reset the graphic to its original position and angle

You can also use the mouse to change the graphic display. The following functions are available:

- In order to rotate the model shown in three dimensions you hold the right mouse button down and move the mouse. If you simultaneously press the shift key, you can only rotate the model horizontally or vertically.
- To shift the model shown: Hold the center mouse button or the wheel button down and move the mouse. If you simultaneously press the shift key, you can only move the model horizontally or vertically.
- To zoom in on a certain area: Mark a zoom area by holding the left mouse button down. After you release the left mouse button, the TNC zooms in on the defined area.
- To rapidly magnify or reduce any area: Rotate the mouse wheel backwards or forwards.
- To return to the standard display: Press the shift key and simultaneously double-click with the right mouse key. The rotation angle is maintained if you only double-click with the right mouse key.

3-D view in the Test Run mode of operation

The **Test Run** operating mode additionally offers the following views:

Soft keys	Function
VIEWS	Volume view
VIEWS	Volume view and tool paths
VIEWS	Tool paths

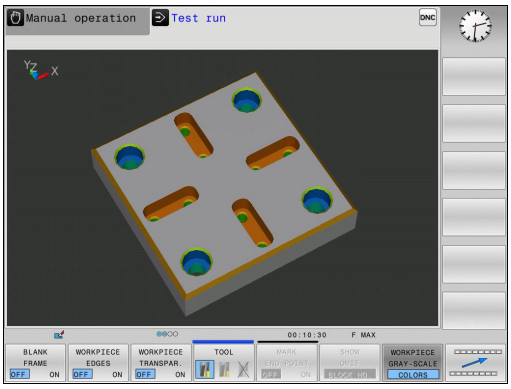

The **Test Run** operating mode additionally offers the following functions:

Soft keys	Function
BLANK FRAME OFF ON	Show workpiece blank frame
WORKPIECE EDGES OFF ON	Highlight workpiece edges
WORKPIECE TRANSPAR. OFF ON	Show a transparent workpiece
MARK END POINT OFF ON	Show the end points of the tool paths
BLOCK NUMBERS OFF ON	Show the block numbers of the tool paths
WORKPIECE GRAY-SCALE COLORS	Show the workpiece in color

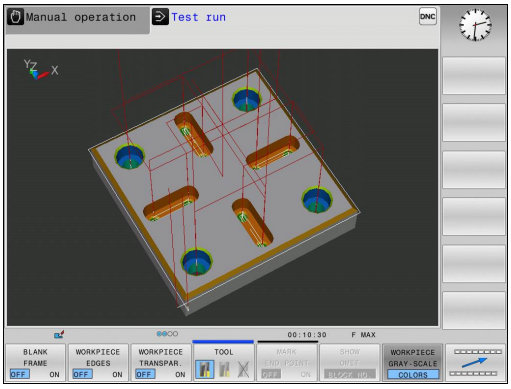

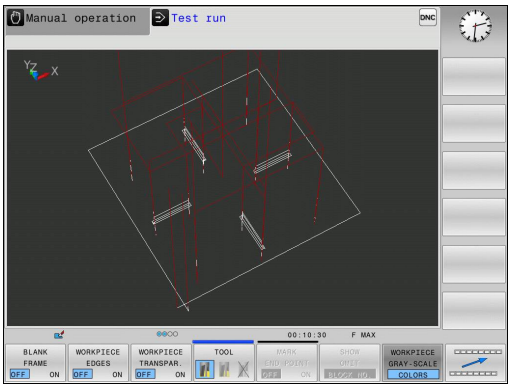

Note that the range of functions depends on the model quality selected. You can select the model quality in the MOD function **Graphic settings**.

By showing the tool paths you can depict the programmed paths of the TNC in three dimensions. A powerful zoom function is available for recognizing details quickly.

In particular, you can use the tool paths display to inspect programs created externally for irregularities before machining. This can help you to avoid undesirable traces of the machining process on the workpiece. Such traces of machining can occur when points are output incorrectly by the postprocessor.

The TNC shows traverse movements in rapid traverse in red.

Repeating graphic simulation

A part program can be graphically simulated as often as desired. To do so you can reset the graphic to the workpiece blank.

Soft key	Function
RESET BLK FORM	Show the unmachined workpiece blank

Tool display

You can show the tools during the simulation.

Soft key	Function
TOOLS DISPLAY HIDE	**Program Run, Full Sequence** / **Program Run, Single Block**
TOOL	**Test Run**

Measurement of machining time

Machining time in the Test Run mode of operation

The control calculates the duration of the tool movements and displays this as machining time in the test run. The control takes feed movements and dwell times into account.

The time calculated by the control can only conditionally be used for calculating the production time because the control does not account for machine-dependent times, such as tool change.

Machining time in the machine operating modes

Time display from program start to program end. The timer stops whenever machining is interrupted.

Activating the stopwatch function

- Shift the soft-key row until the soft-key for the stopwatch functions appears

- Select the stopwatch functions

- Select the desired function via soft key, e.g. saving the displayed time

Soft key	Stopwatch functions
	Store displayed time
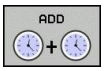	Display the sum of stored time and displayed time
	Clear displayed time

14.2 Showing the workpiece blank in the working space

Application

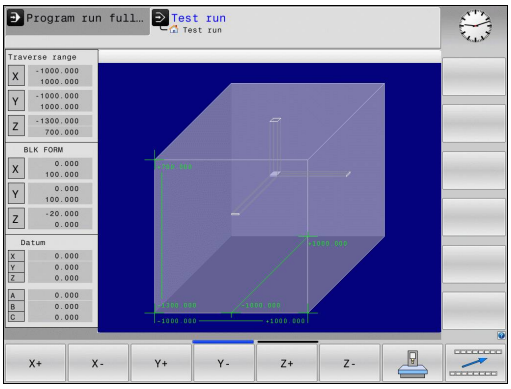

In the **Test Run** operating mode, you can graphically check the position of the workpiece blank or reference point in the machine's working space and activate work space monitoring in the **Test Run** mode: Press the **BLANK IN WORK SPACE** soft key to activate this function. You can use the soft key **SW LIMIT MONITORING** (2nd soft-key row) to activate or deactivate the function.

A transparent cuboid represents the workpiece blank. Its dimensions are shown in the **BLK FORM** table. The TNC takes the dimensions from the workpiece blank definition of the selected program. The workpiece cuboid defines the coordinate system. Its datum lies within the traverse-range cuboid.

For a test run it normally does not matter where the workpiece blank is located within the working space. However, if you activate working-space monitoring, you must graphically shift the workpiece blank so that it lies within the working space. Use the soft keys shown in the table.

You can also activate the current datum for the **Test Run** operating mode (see the following table).

Soft keys		Function
X+	X-	Shift workpiece blank in positive/negative X direction
Y+	Y-	Shift workpiece blank in positive/negative Y direction
Z+	Z-	Shift workpiece blank in positive/negative Z direction
		Show workpiece blank referenced to the set datum
SW limit monitoring		Switch monitoring function on or off

Note that even with **BLK FORM CYLINDER**, a cuboid is shown in the working space as workpiece blank.

14.3 Functions for program display

Overview

In the **Program Run, Single Block** and **Program Run, Full Sequence** modes of operation, the TNC displays the following soft keys for displaying a part program in pages:

Soft key	Functions
	Go back in the program by one screen
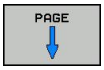	Go forward in the program by one screen
	Go to the start of the program
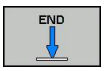	Go to the end of the program

14.4 Test run

Application

In the **Test Run** mode of operation, you can simulate programs and program sections to reduce programming errors during program run. The TNC checks the programs for the following:

- Geometrical incompatibilities
- Missing data
- Impossible jumps
- Violation of the machine's working space

The following functions are also available:

- Blockwise test run
- Interruption of test at any block
- Optional block skip
- Functions for graphic simulation
- Machining time, measuring the
- Additional status display

Danger of collision!

The TNC cannot graphically simulate all traverse motions actually performed by the machine. These include

- Traverse motions during tool change, if the machine manufacturer defined them in a tool-change macro or via the PLC
- Positioning movements that the machine manufacturer defined in an M-function macro
- Positioning movements that the machine manufacturer performs via the PLC

HEIDENHAIN therefore recommends proceeding with caution for every new program, even when the program test did not output any error message, and no visible damage to the workpiece occurred.

With cuboid workpiece blanks, the TNC starts a program test run after a tool call at the following position:

- In the working plane in the center of the defined **BLK FORM**
- In the tool axis, 1 mm above the **MAX** point defined in the **BLK FORM**

In order to ensure unambiguous behavior during program run, after a tool change you should always move to a position from which the TNC can position the tool for machining without causing a collision.

Your machine tool builder can also define a tool-change macro for the **Test Run** operating mode. This macro will simulate the exact behavior of the machine. Refer to your machine manual.

Execute test run

> If the central tool file is active, a tool table must be active (status S) to conduct a test run. Select a tool table via the file manager in the **Test Run** mode of operation.

You can select any preset table (status S) for the test run.

After **RESET + START**, line 0 of the temporarily loaded preset table automatically displays the momentarily active datum from **Preset.pr** (execution). Line 0 is selected when starting the test run until you define another datum in the NC program. All datums from lines > 0 are read by the control from the selected preset table of the test run.

With the **BLANK IN WORK SPACE** function, you activate working space monitoring for the test run, see "Showing the workpiece blank in the working space ", page 343..

- Select the **Test Run** operating mode
- Call the file manager with the **PGM MGT** key and select the file you wish to test

The TNC then displays the following soft keys:

Soft key	Functions
RESET + START	Reset the blank form and test the entire program
START	Test the entire program
START SINGLE	Test each program block individually
STOP	Halt test run (soft key only appears once you have started the test run)

You can interrupt the test run and continue it again at any point —even within a fixed cycle. In order to continue the test, the following actions must not be performed:

- Selecting another block with the arrow keys or the **GOTO** key
- Making changes to the program
- Selecting a new program

14.5 Program run

Application

In the **Program Run, Full Sequence** mode of operation the TNC executes a part program continuously to its end or up to a program stop.

In the **Program Run, Single Block** mode of operation you must start each block separately by pressing the machine **START** button. With point pattern cycles and **CYCL CALL PAT**, the control stops after each point.

You can use the following TNC functions in the **Program Run, Single Block** and **Program Run, Full Sequence** operating modes:

- Interrupt program run
- Start the program run from a certain block
- Optional block skip
- Edit the tool table TOOL.T
- Checking and changing Q parameters
- Superimposing handwheel positioning
- Functions for graphic simulation
- Additional status display

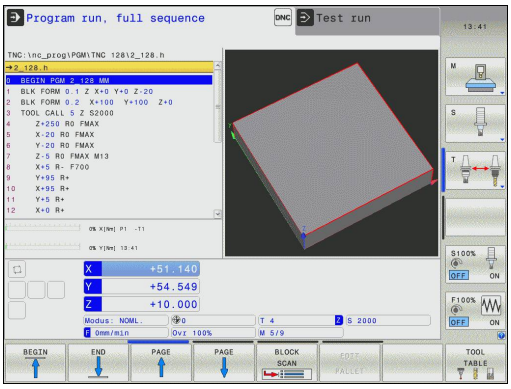

Running a part program

Preparation

1 Clamp the workpiece to the machine table.
2 Set the datum
3 Select the necessary tables (status M)
4 Select the part program (status M)

You can adjust the feed rate and spindle speed with the override knobs.

It is possible to reduce the feed rate when starting the NC program using the **FMAX** soft key. The reduction applies to all rapid traverse and feed rate movements. The value you enter is no longer in effect after the machine has been turned off and on again. In order to re-establish the respectively defined maximum feed rate after switch-on, you need to re-enter the corresponding value.

The behavior of this function varies depending on the respective machine. Refer to your machine manual.

Program Run, Full Sequence

- Start the part program with the machine **START** button

Program Run, Single Block

- Start each block of the part program individually with the machine **START** button

Interrupt machining

There are several ways to interrupt a program run:

- Programmed interruptions
- Pressing the machine **STOP** button
- Switching to **Program Run, Single Block** mode

If the TNC registers an error during program run, it automatically interrupts the machining process.

Programmed interruptions

You can define interruptions directly in the part program. The TNC interrupts the program run at a block containing one of the following entries:

- Miscellaneous function **M0**, **M2** or **M30**
- Miscellaneous function **M6** (determined by the machine tool builder)

Interruption through the machine STOP button

- Press the machine **STOP** button: The block that the TNC is currently executing is not completed. The NC stop signal in the status display blinks (see table)
- If you do not wish to continue the machining process, you can reset the TNC with the **INTERNAL STOP** soft key. The NC stop signal in the status display goes out. In this case, the program must be restarted from the program beginning

Icon	Meaning
	Program run is stopped

Interruption of machining by switching to the Program Run, Single Block mode of operation

You can interrupt a program that is being run in the **Program Run, Full Sequence** mode of operation by switching to the **Program Run, Single Block mode**. The TNC interrupts the machining process at the end of the current block.

Moving the machine axes during an interruption

You can move the machine axes during an interruption in the same way as in the **Manual Operation** mode.

Example:
Retracting the spindle after tool breakage

- Interrupt machining
- Enable the external direction keys: Press the **MANUAL TRAVERSE** soft key
- Move the axes with the machine axis direction buttons.

On some machines you may have to press the machine **START** button after the **MANUAL OPERATION** soft key to enable the axis direction buttons. Refer to your machine manual.

Resuming program run after an interruption

If you cancel a program with INTERNAL STOP, you have to start the program with the **RESTORE POS. AT N** function or with GOTO "0".

If a program run is interrupted during a fixed cycle, the program must be resumed from the beginning of the cycle. This means that some machining operations will be repeated.

If you interrupt a program run during execution of a subprogram or program section repeat, use the **RESTORE POS AT N** function to return to the position at which the program run was interrupted.

14.5 Program run

When a program run is interrupted, the TNC stores:

- The data of the last defined tool
- Active coordinate transformations (e.g. datum shift, mirroring)
- The coordinates of the circle center that was last defined

> Note that the stored data remain active until they are reset (e.g. if you select a new program).

The stored data are used for returning the tool to the contour after manual machine axis positioning during an interruption (**RESTORE POSITION** soft key).

Resuming program run with the START button

You can resume program run by pressing the machine **START** button if the program was interrupted in one of the following ways:

- Machine **STOP** button pressed
- Programmed interruption

Resuming program run after an error

With an erasable error message:

- Remove the cause of the error
- Clear the error message from the screen: Press the **CE** key
- Restart the program, or resume program run where it was interrupted

With an non-erasable error message

- Press and hold the **END** key for two seconds. This induces a TNC system restart
- Remove the cause of the error
- Restart

If you cannot correct the error, write down the error message and contact your service agency.

Retraction after a power interruption

The **Retraction** mode of operation must be enabled and adapted by the machine tool builder. Refer to your machine manual.

With the **Retraction** mode of operation you can disengage the tool from the workpiece after an interruption in power.

The **Retraction** mode of operation is selectable in the following conditions:

- Power interruption
- Relay external DC voltage missing
- Traverse reference points

The **Retraction** operating mode offers the following modes of traverse:

Mode	Function
Machine axes	Movement of all axes in the original coordinate system
Thread	Movements of the tool axis in the active coordinate system with compensating movement of the spindle Effective parameters: Thread pitch and direction of rotation

The TNC selects the mode of traverse and the associated parameters automatically. If the traverse mode or the parameters were not correctly chosen, you can change them manually.

Danger of collision!

For nonreferenced axes, the TNC adopts the most recently saved axis values. These values generally are not the exact actual axis positions!

As a result, for example, the tool might not move exactly along the actual tool direction. If the tool is still in contact with the workpiece, it can cause stress or damage to the tool and workpiece. Stress or damage to the workpiece or tool can also be caused by uncontrolled coasting or braking of axes after a power interruption. Move the axes carefully if the tool is still in contact with the workpiece. Set the feed rate override to the smallest values possible. If you use the handwheel, use a small feed rate factor.

The traverse range monitoring is not available for nonreferenced axes. Observe the axes while you move them. Do not move to the limits of traverse.

Example

The power failed while a thread cutting cycle was being performed. You have to retract the tap:

- Switch on the power supply for control and machine. The TNC starts the operating system. This process may take several minutes. Then the TNC will display the message "Power interrupted" in the screen header

- Activate the **Retraction** mode: Press the **RETRACT** soft key. The TNC displays the message **RETRACT**.

- Acknowledge the power interruption: Press the **CE** key. The TNC compiles the PLC program.

- Switch on the control voltage: The TNC checks the functioning of the EMERGENCY STOP circuit. If at least one axis is not referenced, you have to compare the displayed position values with the actual axis value and confirm their agreement. Follow the dialog, if required.

- Check the preselected traversing mode: if required, select **THREAD**
- Check the preselected thread pitch: if required, enter the thread pitch
- Check the preselected direction of rotation: if required, select the direction of thread rotation.
  Right-handed thread: The spindle turns in clockwise direction when moving into the workpiece and counterclockwise when retracting
  Left-hand thread: The spindle turns in counterclockwise direction when moving into the workpiece and clockwise when retracting

- Activate retraction: Press the **RETRACT** soft key

- Retraction: Retract the tool with the machine axis keys or the electronic handwheel
  Axis key Z+: Retraction from the workpiece
  Axis key Z-: Moving into the workpiece

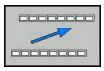

- Exit retraction: Return to the original soft-key level

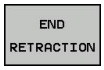

- End the **Retraction** mode: Press the **END RETRACTION** soft key. The TNC checks whether the **Retraction** mode can be ended. If necessary, follow the dialog.

- Answer the confirmation request: If the tool was not correctly retracted, press the **NO** soft key. If the tool was correctly retracted, press the **YES** soft key. The TNC hides the **retraction** dialog.
- Initialize the machine: if required, scan the reference points
- Establish the desired machine condition: if required, reset the tilted working plane

Any entry into program (mid-program startup)

The **RESTORE POS AT N** feature must be enabled and adapted by the machine tool builder. Refer to your machine manual.

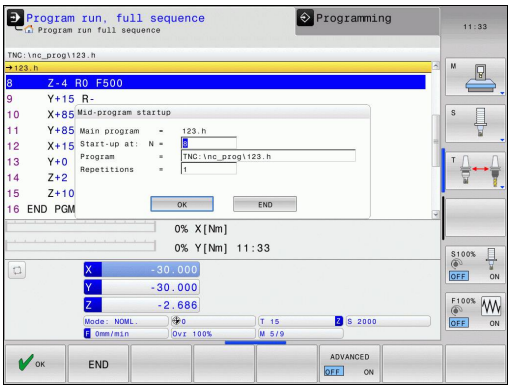

With the **RESTORE POS AT N** feature (block scan) you can start a part program at any block you desire. The TNC scans the program blocks up to that point. Machining can be graphically simulated.

If you have interrupted a part program with an **INTERNAL STOP**, the TNC automatically offers the interrupted block N for mid-program startup.

Mid-program startup must not begin in a subprogram.

All necessary programs, tables and pallet files must be selected in the **Program Run, Single Block** and **Program Run, Full Sequence** operating modes (status M).

If the program contains a programmed interruption before the startup block, the block scan is interrupted. Press the machine **START** button to continue the block scan.

After a block scan, return the tool to the calculated position with **RESTORE POSITION**.

Tool length compensation does not take effect until after the tool call and a following positioning block. This also applies if you have only changed the tool length.

- Go to the first block of the current program to start a block scan: Enter **GOTO** "0"

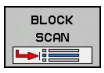

- Select mid-program startup: Press the **MID-PROGRAM STARTUP** soft key
- **Start-up at N**: Enter the block number N at which the block scan should end
- **Program**: Enter the name of the program containing block N
- **Repetitions**: If block N is located in a program section repeat or in a subprogram that is to be run repeatedly, enter the number of repetitions to be calculated in the block scan
- Start mid-program startup: Press the machine **START** button
- Contour approach (see following section)

Entering a program with the GOTO key

> **!** If you use the **GOTO** block number key for going into a program, neither the TNC nor the PLC will execute any functions that ensure a safe start.
>
> If you use the GOTO block number key for going into a subprogram,
>
> - the TNC will skip the end of the subprogram ((**LBL 0**))
>
> In such cases you must always use the mid-program startup function.

Returning to the contour

With the **RESTORE POSITION** function, the TNC returns to the workpiece contour in the following situations:

- Return to the contour after the machine axes were moved during a program interruption that was not performed with the **INTERNAL STOP** function
- Return to the contour after a block scan with **RESTORE POS AT N**, for example after an interruption with **INTERNAL STOP**
- Depending on the machine, if the position of an axis has changed after the control loop has been opened during a program interruption

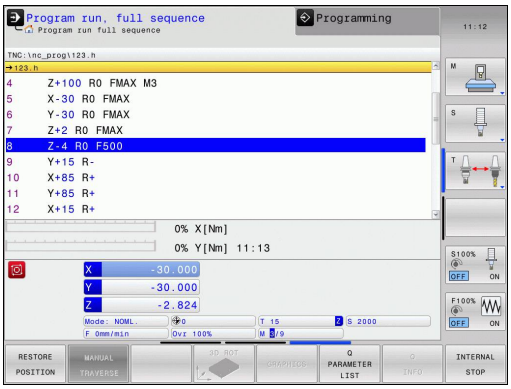

- ▶ To select a return to contour, Press the **RESTORE POSITION** soft key
- ▶ Restore machine status, if required
- ▶ To move the axes in the sequence that the TNC suggests on the screen, press the machine START button, or
- ▶ To move the axes in any sequence: press the soft keys **RESTORE X**, **RESTORE Z**, etc., and activate each axis with the machine **START** button.
- ▶ To resume machining, press the machine **START** button.

14.6 Optional block skip

Application

In a test run or program run, the control can skip over blocks that begin with a slash "/":

- To run or test the program without the blocks preceded by a slash, set the soft key to **ON**

- To run or test the program with the blocks preceded by a slash, set the soft key to **OFF**

> This function does not work for **TOOL DEF** blocks.
> After a power interruption the TNC returns to the most recently selected setting.

Inserting the "/" character

- In the **Programming** mode you select the block in which the character is to be inserted

- Select the **INSERT** soft key

Erasing the "/" character

- In the **Programming** mode you select the block in which the character is to be deleted

- Select the **REMOVE** soft key

14.7 Optional program-run interruption

Application

The behavior of this function varies depending on the respective machine.

Refer to your machine manual.

The TNC optionally interrupts program run at blocks containing M1. If you use M1 in the Program Run mode, the TNC does not switch off the spindle or coolant.

- Do not interrupt program run or test run at blocks containing M1: Set soft key to **OFF**

- Interrupt program run or test run at blocks containing M1: Set soft key to **ON**

15

MOD functions

15.1 MOD function

The MOD functions provide additional input possibilities and displays. In addition you can enter code numbers to enable access to protected areas.

The available MOD functions depend on the selected operating mode.

Selecting MOD functions

Open the pop-up window with the MOD functions:

MOD

- To select the MOD functions, press the **MOD** key. The TNC opens a pop-up window displaying the available MOD functions.

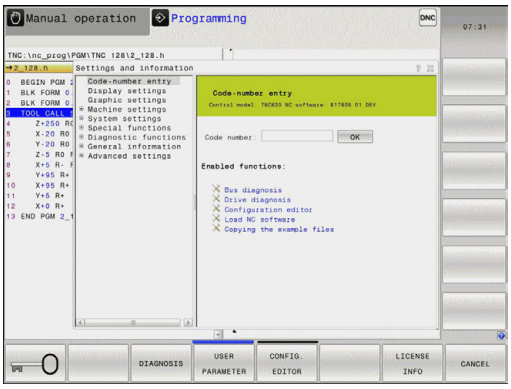

Changing the settings

There are three possibilities for changing a setting, depending on the function selected:

- Enter a numerical value directly, e.g. when determining the traverse range limit
- Change a setting by pressing the **ENT** key, e.g. when setting program input
- Change a setting via a selection window

> If more than one possibility is available for a particular setting, you can superimpose a window listing all of the given possibilities by pressing the **GOTO** key. Select the setting with the **ENT** key. If you don't want to change the setting, close the window again with the **END** key.

Exiting MOD functions

- Exit the MOD functions: Press the **CANCEL** soft key or the **END** key

Overview of MOD functions

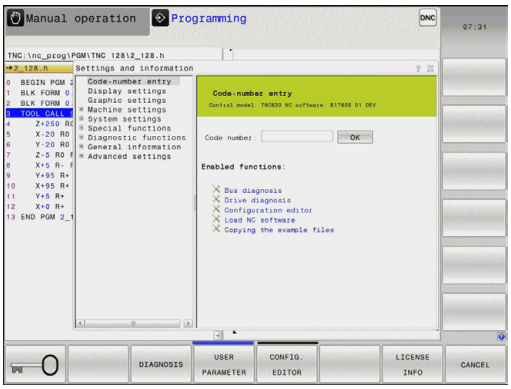

The following functions are available regardless of the selected operating mode:

Code-number entry

- Code number

Display settings

- Position displays
- Unit of measurement (mm/inches) for position display
- Program entry for MDI
- Show time of day
- Show the info bar

Graphic settings

- Model type
- Model quality

Machine settings

- Kinematics selection
- Tool-usage file
- External access

System settings

- Set the system time
- Define the network connection
- Network: IP configuration

Diagnostic functions

- HEROS information

General information

- Software version
- FCL information
- License information
- Machine times

15.2 Graphic settings

With the MOD function **Graphic settings**, you can select the model type and model quality for the **Test Run** mode of operation.

Select the graphic settings:

- In the MOD menu, select the **Graphic settings** group
- Select the model type
- Select the model quality
- Press the **APPLY** soft key
- Press the **OK** soft key

You have the following simulation parameters for the graphic settings:

Model type

Displayed symbol	Choice	Properties	Application
	3-D	Very true to detail, heavy time and processor consumption	Milling with undercuts,
	2.5 D	Fast	Milling without undercuts
	No model	Very fast	Line graphics

Model quality

Displayed symbol	Choice	Properties
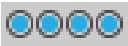	Very high	High data transfer rate, exact depiction of tool geometry, depiction of block end points and block numbers possible
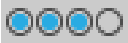	High	High data transfer rate, exact depiction of tool geometry
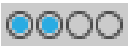	Medium	Medium data transfer rate, approximation of tool geometry
	Low	Low data transfer rate, coarse approximation of tool geometry

15.3 Machine settings

External access

The machine tool builder can configure the external access options. Refer to your machine manual.

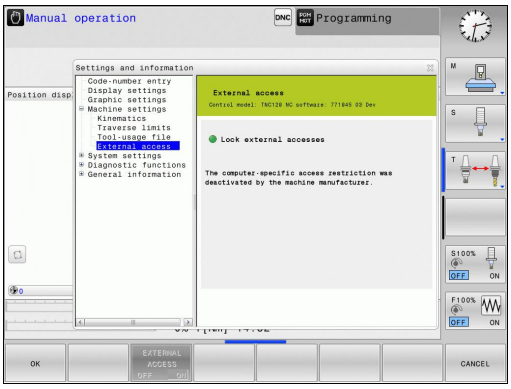

With the MOD function **External access** you can grant or restrict access to the TNC. If you have restricted the external access it is no longer possible to connect to the TNC and exchange data via a network or a serial connection, e.g. with the TNCremo data transfer software.

Restricting external access:

- In the MOD menu select the **Machine settings** group
- Select the **External access** menu
- Set the **EXTERNAL ACCESS SOFT KEY TO OFF**
- Press the **OK** soft key

Entering traverse limits

The **Traverse limits** function must be enabled and adapted by the machine tool builder.

Refer to your machine manual.

The MOD function **Traverse limits** enables you to limit the actually usable tool path within the maximum traverse range. This enables you to define protection zones in each axis to protect a component from collision for example.

To enter traverse limits:

- In the MOD menu select the **Machine settings** group
- Select the **Traverse limits** menu
- Enter the values of the desired axes as a reference value or load the momentary position with the **ACTUAL POSITION CAPTURE** soft key
- Press the **APPLY** soft key
- Press the **OK** soft key

The protection zone becomes active automatically as soon as you set a limit in an axis. Settings are kept even after restarting the control.

You can only deactivate the protection zone by deleting all values or pressing the **CLEAR ALL** soft key.

Tool usage file

The tool usage test function must be enabled by your machine manufacturer. Refer to your machine manual.

With the MOD function **Tool usage file** you can select whether the TNC never, once, or always uses a tool usage file.

To generate a tool usage file:

- In the MOD menu select the **Machine settings** group
- Select the **Tool usage file** menu
- Select the desired setting for the **Program Run, Full Sequence/ Single Block** and **Test Run** operating modes
- Press the **APPLY** soft key
- Press the **OK** soft key

Select kinematics

The **Select Kinematics** function must be enabled and adapted by the machine manufacturer.

Refer to your machine manual.

You can use this function to test programs whose kinematics does not match the active machine kinematics. If your machine manufacturer saved different kinematic configurations in your machine, you can activate one of these kinematics configurations with the MOD function. When you select a kinematics model for the test run this does not affect machine kinematics.

Danger of collision!

When you switch the kinematics model for machine operation, the TNC implements all of subsequent movements with modified kinematics.

Ensure that you have selected the correct kinematics in the test run for checking your workpiece.

15.4 System settings

Set the system time

With the **Set system time** MOD function you can set the time zone, data and time manually or with the aid of an NTP server synchronization.

To set the system time manually:

- In the MOD menu, select the **System settings** group
- Press the **SET DATE/TIME** soft key
- Select your time zone in the **Time zone** area
- Press the **LOCAL/NTP** soft key in order to select the **Set time manually** entry
- If required, change the datum and the time
- Press the **OK** soft key

To set the system time with the aid of an NTP server:

- In the MOD menu, select the **System settings** group
- Press the **SET DATE/TIME** soft key
- Select your time zone in the **Time zone** area
- Press the **LOCAL/NTP** soft key in order to synchronize the time entry through the NTP server
- Enter the host name or the URL of an NTP server
- Press the **ADD** soft key
- Press the **OK** soft key

15.5 Select the position display

Application

In the **Manual Operation** mode and the **Program Run, Full Sequence** and **Program Run, Single Block** modes of operation, you can select the type of coordinates to be displayed:

The figure at right shows the different tool positions:

- Initial position
- Target position of the tool
- Workpiece datum
- Machine datum

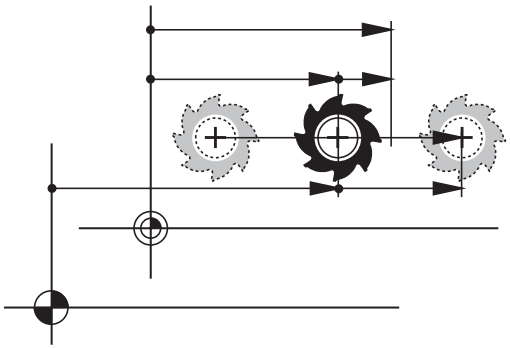

The TNC position displays can show the following coordinates:

Function	Display
Nominal position: the value presently commanded by the TNC	NOML.
Actual position; current tool position	ACTL.
Reference position; the actual position relative to the machine datum	REF ACTL
Reference position; the nominal position relative to the machine datum	REF NOML
Servo lag; difference between nominal and actual positions (following error)	LAG
Distance remaining to the programmed position in the input system; difference between actual and target positions	ACTDST
Distance remaining to the programmed position with reference to the machine datum; difference between reference and target positions	REFDST
Traverses that were carried out with handwheel superimpositioning (M118)	M118

With the MOD function **Position display 1**, you can select the position display in the status display.

With the MOD function **Position display 2**, you can select the position display in the additional status display.

15.6 Setting the unit of measure

Application

This MOD function determines whether the coordinates are displayed in millimeters (metric system) or inches.

- Metric system: e.g. X = 15.789 (mm), the value is displayed to 3 decimal places
- Inch system: e.g. X = 0.6216 (inches), value is displayed to 4 decimal places

If you would like to activate the inch display, the TNC shows the feed rate in inch/min. In an inch program you must enter the feed rate larger by a factor of 10.

15.7 Displaying operating times

Application

The **MACHINE TIME** MOD function enables you to see various types of operating times:

Operating time	Meaning
Control on	Operating time of the control since being put into service
Machine on	Operating time of the machine tool since being put into service
Program run	Duration of controlled operation since being put into service

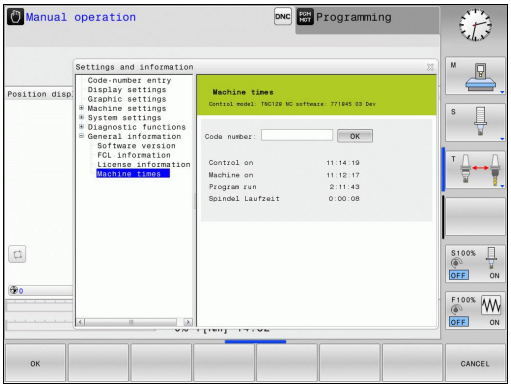

The machine tool builder can provide further operating time displays. Refer to your machine manual.

15.8 Software numbers

Application

The following software numbers are displayed on the TNC screen after the "Software version" MOD function has been selected:

- **Control model**: Designation of the control (managed by HEIDENHAIN)
- **NC SW**: Number of the NC software (managed by HEIDENHAIN)
- **NCK**: Number of the NC software (managed by HEIDENHAIN)
- **PLC SW**: Number and name of the PLC software (managed by your machine tool builder)

In the "FCL information" MOD function, the TNC shows the following information:

- **Development level (FCL=Feature Content Level):** Development level of the software installed on the control, see "Feature Content Level (upgrade functions)", page 9

15.9 Entering the code number

Application

The TNC requires a code number for the following functions:

Function	Code number
Selecting user parameters	123
Configuring an Ethernet card	NET123
Enabling special functions for Q parameter programming	555343

15.10 Setting up data interfaces

Serial interfaces on the TNC 128

The TNC 128 automatically uses the LSV2 transmission protocol for serial data transfer. The LSV2 protocol is permanent and cannot be changed except for setting the baud rate (machine parameter **baudRateLsv2**). You can also specify another type of transmission (interface). The settings described below are therefore effective only for the respective newly defined interface.

Application

To set up a data interface, press the MOD key. Enter the code number 123. In the **CfgSerialInterface** user parameter, you can enter the following settings:

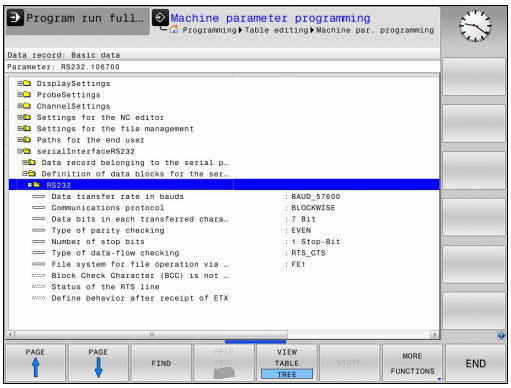

Setting the RS-232 interface

Open the RS232 folder. The TNC then displays the following settings:

Setting the BAUD RATE (baudRate)

You can set the BAUD RATE (data transfer speed) from 110 to 115 200 baud.

Setting the protocol (protocol)

The data transfer protocol controls the data flow of a serial transmission (comparable to MP5030 of the iTNC 530).

> Here, the BLOCKWISE setting designates a form of data transfer where data is transmitted in blocks. This is not to be confused with the blockwise data reception and simultaneous blockwise processing by older TNC contouring controls. Blockwise reception of an NC program and simultaneous machining of the program is not possible!

Data transmission protocol	Selection
Standard data transmission (transmission line-by-line)	STANDARD
Packet-based data transfer	BLOCKWISE
Transmission without protocol (only character-by-character)	RAW_DATA

Setting data bits (dataBits)

By setting the data bits you define whether a character is transmitted with 7 or 8 data bits.

Check parity (parity)

The parity bit helps the receiver to detect transmission errors. The parity bit can be formed in three different ways:

- No parity (NONE): There is no error detection
- Even parity (EVEN): Here there is an error if the receiver finds that it has received an odd number of set bits
- Odd parity (ODD): Here there is an error if the receiver finds that it has received an even number of set bits

Setting the stop bits (stopBits)

The start bit and one or two stop bits enable the receiver to synchronize each transmitted character during serial data transmission.

Setting handshaking (flowControl)

By handshaking, two devices control data transfer between them. A distinction is made between software handshaking and hardware handshaking.

- No data flow checking (NONE): Handshaking is not active
- Hardware handshaking (RTS_CTS): Transmission stop is active through RTS
- Software handshaking (XON_XOFF): Transmission stop is active through DC3 (XOFF)

File system for file operations (fileSystem)

In **fileSystem** you define the file system for the serial interface. This machine parameter is not required if you don't need a special file system.

- EXT: Minimum file system for printers or non-HEIDENHAIN transmission software. Corresponds to the EXT1 and EXT2 modes of earlier TNC controls.
- FE1: Communication with the TNCserver PC software or an external floppy disk unit.

Block Check Character (bccAvoidCtrlChar)

With Block Check Character (optional) no control character, you determine whether the checksum can correspond to a control character.

- TRUE: The checksum does not correspond to a control character
- FALSE: The checksum can correspond to a control character

Condition of RTS line (rtsLow)

With Condition of RTS line (optional) you determine whether the "low" level is active in idle state.

- TRUE: Level is "low" in idle state
- FALSE: Level is not "low" in idle state

Define behavior after reception of ETX (noEotAfterEtx)

With define behavior after reception of ETX (optional) you determine whether the EOT character is sent after the ETX character was received.

- TRUE: The EOT character is not sent
- FALSE: The EOT character is sent

Settings for data transfer with the TNCserver PC software

Enter the following settings in the user parameters (**serialInterfaceRS232 / definition of data blocks for the serial ports / RS232**):

Parameters	Selection
Data transfer rate in baud	Has to match the setting in TNCserver
Data transmission protocol	BLOCKWISE
Data bits in each transferred character	7 bits
Type of parity checking	EVEN
Number of stop bits	1 stop bit
Specify type of handshake:	RTS_CTS
File system for file operations	FE1

Setting the operating mode of the external device (fileSystem)

The functions "Transfer all files," "Transfer selected file," and "Transfer directory" are not available in the FE2 and FEX modes.

Icon	External device	Operating mode
	PC with HEIDENHAIN TNCremo data transfer software	LSV2
	HEIDENHAIN floppy disk units	FE1
	Non-HEIDENHAIN devices such as printers, scanners, punchers, PC without TNCremo	FEX

Data transfer software

For transfer of files to and from the TNC, we recommend using the HEIDENHAIN TNCremo data transfer software. With TNCremo, data transfer is possible with all HEIDENHAIN controls via the serial interface or the Ethernet interface.

> ⇨ You can download the current version of TNCremo free of charge from the HEIDENHAIN Filebase (www.heidenhain.de, <Documentation and Information>, <Software>, <Download area>, <PC Software>, <TNCremo>).

System requirements for TNCremo:

- PC with 486 processor or higher
- Windows XP, Windows Vista, Windows 7, Windows 8 operating system
- 16 MB RAM
- 5 MB free memory space on your hard disk
- An available serial interface or connection to the TCP/IP network

Installation under Windows

- ▶ Start the SETUP.EXE installation program with the file manager (Explorer)
- ▶ Follow the setup program instructions

Starting TNCremo under Windows

- ▶ Click on <Start>, <Programs>, <HEIDENHAIN Applications>, <TNCremo>

When you start TNCremo for the first time, TNCremo automatically tries to set up a connection with the TNC.

Data transfer between the TNC and TNCremo

> Before you transfer a program from the TNC to the PC, you must make absolutely sure that you have already saved the program currently selected on the TNC. The TNC saves changes automatically when you switch the mode of operation on the TNC, or when you select the file manager via the PGM MGT key.

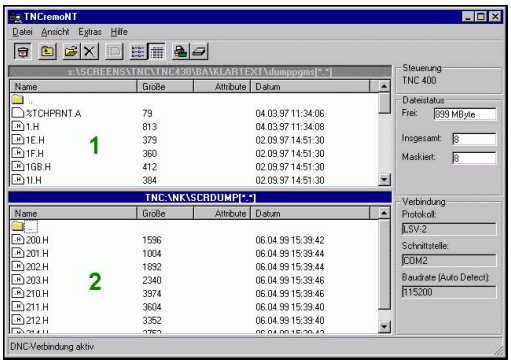

Check whether the TNC is connected to the correct serial port on your PC or to the network.

Once you have started TNCremo, you will see a list of all files that are stored in the active directory in the upper section of the main window **1**. Using <File>, <Change directory>, you can select any drive or another directory on your PC.

If you want to control data transfer from the PC, establish the connection with your PC in the following manner:

- Select <File>, <Setup connection>. TNCremo now receives the file and directory structure from the TNC and displays this at the bottom left of the main window **2**
- To transfer a file from the TNC to the PC, select the file in the TNC window with a mouse click and drag and drop the highlighted file into the PC window **1**
- To transfer a file from the PC to the TNC, select the file in the PC window with a mouse click and drag and drop the highlighted file into the TNC window **2**

If you want to control data transfer from the TNC, establish the connection with your PC in the following manner:

- Select <Extras>, <TNCserver>. TNCremo is now in server mode. It can receive data from the TNC and send data to the TNC
- You can now call the file management functions on the TNC by pressing the key **PGM MGT**see "Data transfer to/from an external data medium", page 119, in order to transfer the desired files

End TNCremo

Select <File>, <Exit>

> Refer also to the TNCremo context-sensitive help texts where all of the functions are explained in more detail. The help texts must be called with the F1 key.

15.11 Ethernet interface

Introduction

The TNC is shipped with a standard Ethernet card to connect the control as a client in your network. The TNC transmits data via the Ethernet card with

- the **smb** protocol (Server Message Block) for Windows operating systems, or
- the **TCP/IP** protocol family (Transmission Control Protocol/ Internet Protocol) and with support from the NFS (Network File System)

Connection options

You can connect the Ethernet card in your TNC to your network through the RJ45 connection (X26, 100BaseTX or 10BaseT), or directly to a PC. The connection is metallically isolated from the control electronics.

For a 100BaseTX or 10BaseT connection you need a Twisted Pair cable to connect the TNC to your network.

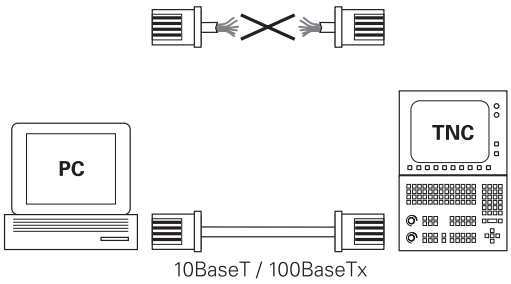

> The maximum cable length between TNC and a node depends on the quality grade of the cable, the sheathing and the type of network (100BaseTX or 10BaseT).
>
> No great effort is required to connect the TNC directly to a PC that has an Ethernet card. Simply connect the TNC (port X26) and the PC with an Ethernet crossover cable (trade names: crossed patch cable or STP cable).

Configuring the TNC

> Make sure that the person configuring your TNC is a network specialist.

- Press the MOD key in the **Programming** operating mode and enter the code number NET123
- In the file manager, press the **NETWORK** soft key **NET**

General network settings

- Press the **CONFIGURE NETWORK** soft key: The TNC displays the network settings in a pop-up window. The **Computer name** tab is active:

Setting	Meaning
Primary interface	Name of the Ethernet interface to be integrated in your company network. Only active if a second, optional Ethernet interface is available on the control hardware
Computer name	Name displayed for the TNC in your company network
Host file	**Only required for special applications**: Name of a file in which the assignments of IP addresses to computer names is defined

- Select the **Interfaces** tab to enter the interface settings:

Setting	Meaning
Interface list	List of the active Ethernet interfaces. Select one of the listed interfaces (via mouse or arrow keys) ■ **Activate** button: Activate the selected interface (an **X** appears in the **Active** column) ■ **Deactivate** button: Deactivate the selected interface (**-** in the **Active** column) ■ **Configuration** button: Open the configuration menu
Allow IP forwarding	**This function must be kept deactivated**. Only activate this function if external access via the second, optional Ethernet interface of the TNC is necessary for diagnostic purposes. Only do so after instruction by our Service Department

15.11 Ethernet interface

- Press the **Configuration** button to open the Configuration menu:

Setting	Meaning
Status	■ **Active interface**: Connection status of the selected Ethernet interface ■ **Name**: Name of the interface you are currently configuring ■ **Plug connection**: Number of the plug connection of this interface on the logic unit of the control
Profile	Here you can create or select a profile in which all settings shown in this window are stored. HEIDENHAIN provides two standard profiles: ■ **DHCP-LAN**: Settings for the standard TNC Ethernet interface, should work in a standard company network ■ **MachineNet**: Settings for the second, optional Ethernet interface; for configuration of the machine network Press the corresponding buttons to save, load and delete profiles
IP address	■ **Automatically procure IP address**: The TNC is to procure the IP address from the DHCP server ■ **Manually set IP address**: Manually define the IP address and subnet mask. Input: Four numerical values separated by points, in each field, e.g. **160.1.180.20** and **255.255.0.0**
Domain Name Server (DNS)	■ **Automatically procure DNS**: The TNC is to automatically procure the IP address of the domain name server ■ **Manually configure DNS**: Manually enter the IP addresses of the servers and the domain name
Default gateway	■ **Automatically procure default GW**: The TNC is to automatically procure the default gateway ■ **Manually configure default GW**: Manually enter the IP addresses of the default gateway

- Apply the changes with the **OK** button, or discard them with the **Cancel** button

- The **Internet** tab currently has no function.

Setting	Meaning
Proxy	■ **Direct connection to Internet /NAT**: The control forwards Internet inquiries to the default gateway and from there they must be forwarded through network address translation (e.g.. if a direct connection to a modem is available) ■ **Use proxy**: Define the **Address** and **Port** of the Internet router in your network, ask your network administrator for the correct address and port
Telemaintenance	The machine manufacturer configures the server for telemaintenance here. Changes must always be made in agreement with your machine tool builder

- Select the **Ping/Routing** tab to enter the ping and routing settings:

Setting	Meaning
Ping	In the **Address:** field, enter the IP number for which you want to check the network connection. Input: four numerical values separated by periods, e.g. **160.1.180.20**. As an alternative, you can enter the name of the computer whose connection you want to check ■ Press the **Start** button to begin the test. The TNC shows the status information in the Ping field ■ Press the **Stop** button to conclude the test
Routing	For network specialists: Status information of the operating system for the current routing ■ Press the **Update** button to refresh the routing information

- Select the **NFS UID/GID** tab to enter the user and group identifications:

Setting	Meaning
Set UID/GID for NFS shares	■ **User ID**: Definition of which user identification the end user uses to access files in the network. Ask your network specialist for the proper value ■ **Group ID**: Definition of the group identification with which you access files in the network. Ask your network specialist for the proper value

- **DHCP server**: Settings for automatic network configuration

Setting	Meaning
DHCP server	■ **IP addresses from:**: Define the IP address as of which the TNC is to derive the pool of dynamic IP addresses. The TNC transfers the values that appear dimmed from the static IP address of the defined Ethernet interface; these values cannot be edited. ■ **IP addresses to**: Define the IP address up to which the TNC is to derive the pool of dynamic IP addresses ■ **Lease Time (hours)**: Time within which the dynamic IP address is to remain reserved for a client. If a client logs on within this time, the TNC reassigns the same dynamic IP address. ■ **Domain name**: Here you can define a name for the machine network if required. This is necessary if the same names are assigned in the machine network and in the external network, for example. ■ **Forward DNS externally**: If **IP Forwarding** is active (Interfaces tab) and the option is active, you can specify that the name resolution for devices in the machine network can also be used by the external network. ■ **Forward DNS from outside**: If **IP Forwarding** is active (Interfaces tab) and the option is active, you can specify that the TNC is to forward DNS inquiries from devices within the machine network to the name server of the external network if the DNS server of the MC cannot answer the inquiry. ■ **Status** button: Call an overview of the devices that are provided with a dynamic IP address in the machine network. You can also select settings for these devices. ■ **Additional options** button: Additional settings for the DNS/DHCP server. ■ **Set standard values** button: Set factory settings.

- **Sandbox**: Changes must always be made in agreement with your machine tool builder

Network settings specific to the device

- Press the **DEFINE NETWORK CONNECTN.** soft key to enter the network settings for a specific device. You can define any number of network settings, but you can manage only seven at one time

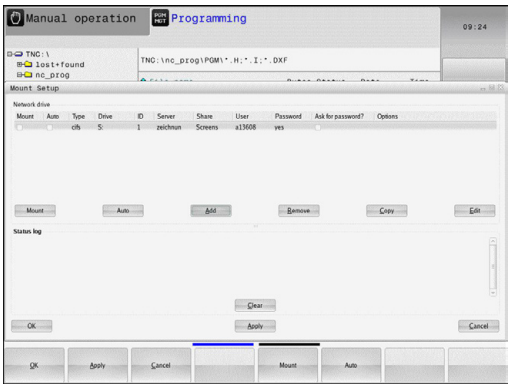

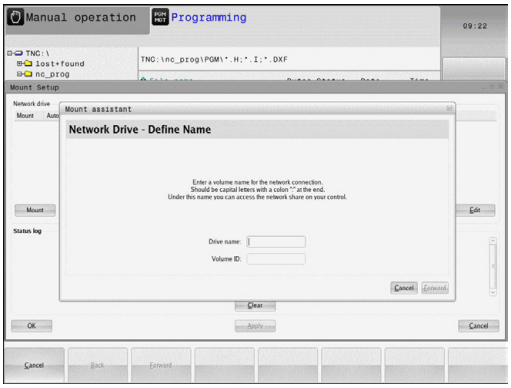

Setting	Meaning
Network drive	List of all connected network drives. The TNC shows the respective status of the network connections in the columns: ■ **Mount**: Network drive connected / not connected ■ **Auto**: Network drive is to be connected automatically/manually ■ **Type**: Type of network connection. cifs and nfs are possible ■ **Drive**: Designation of the drive on the TNC ■ **ID**: Internal ID that identifies if a mount point has been used for more than one connection ■ **Server**: Name of the server ■ **Authorization name**: Name of the directory on the server that the TNC is to access ■ **User**: User name with which the user logs on to the network ■ **Password**: Network drive password protected / not protected ■ **Request password?**: Request / Do not request password during connection ■ **Options**: Display additional connection options To manage the network drives, use the screen buttons. To add network drives, use the **Add** button: The TNC then starts the connection wizard, which guides you by dialog through the required definitions.
Status log	Display of status information and error messages. Press the Clear button to delete the contents of the Status Log window.

15.12 Firewall

Application

You can set up a firewall for the primary network interface of the control. It can be configured so that incoming network traffic is blocked and/or a message is displayed depending on the sender and the service. However, the firewall cannot be started for the second network interface of the control if it is active as DHCP server.

Once the firewall has been activated, a symbol appears at the lower right in the taskbar. The symbol changes depending on the safety level that the firewall was activated with, and informs about the level of the safety settings:

Icon	Meaning
	No firewall protection provided although it was activated in the configuration. This can happen, for example, if PC names were used in the configuration for which there are no equivalent IP addresses as yet.
	Firewall active with medium safety level.
	Firewall active with high safety level. (All services except for the SSH are blocked)

> Have the standard settings checked by your network specialist and change them if necessary.
>
> The settings in the additional tab **SSH settings** are in preparation for future enhancements and currently have no function.

Configuring the firewall

Make your firewall settings as follows:

- Use the mouse to open the task bar at the bottom edge of the screen(see "Window manager", page 76)
- Press the green HEIDENHAIN button to open the JH menu.
- Select the **Settings** menu item
- Select the **Firewall** menu item

HEIDENHAIN recommends activating the firewall with the prepared default settings:

- Set the **Active** option to enable the firewall
- Press the **Set standard values** button to activate the default settings recommended by HEIDENHAIN.
- Close the dialog with **OK**

Firewall settings

Option	Meaning
Active	Switching the firewall on or off
Interface:	Selection of the **eth0** interface usually corresponds to X26 of the MC main computer. **eth1** corresponds to X116. You can check this in the network settings in the Interfaces tab. On main computer units with two Ethernet interfaces, the DHCP server is active by default for the second (non-primary) interface for the machine network. With this setting it is not possible to activate the firewall for **eth1** because the firewall and the DHCP server exclude themselves mutually
Report other inhibited packets:	Firewall active with high safety level. (All services except for the SSH are blocked)
Inhibit ICMP echo answer:	If this option is set, the control no longer answers to a PING request.
Service	This column contains the short names of the services that are configured with this dialog. For the configuration it is not important here whether the services themselves have been started ■ **LSV2** contains the functionality for TNCRemoNT and Teleservice, as well as the HEIDENHAIN DNC interface (ports 19000 to 19010) ■ **SMB** only refers to incoming SMB connections, i.e. if a Windows release is made on the NC. Outgoing SMB connections (i.e. if a Windows release is connected to the NC) cannot be prevented. ■ **SSH** stands for the Secure Shell protocol (port 22). As of HEROS 504, the LSV2 can be executed safely tunneled via this SSH protocol. ■ **VNC** protocol means access to the screen contents. If this service is blocked, the screen content can no longer be accessed, not even with the Teleservice programs from HEIDENHAIN (e.g. screenshot). If this service is blocked, the VNC configuration dialog shows a warning from HEROS that VNC is disabled in the firewall.

Option	Meaning
Method	Under **Method** you can configure whether the service should not be available to anyone (**Prohibit all**), available to everyone (**Permit all**) or only available to some (Permit some). If you set **Permit some** you must also specify the computer (under Computer) that you wish to grant access to the respective service. If you do not specify any computer under **Computer**, the setting **Prohibit all** will become active automatically when the configuration is saved.
Log	If **Log** is activated, a "red" message is output if a network package for this service was blocked. A "blue" message is output if a network package for this service was accepted.
Computer	If the setting **Permit some** is selected under **Method**, the relevant computers can be specified here. The computers can be entered with their IP addresses or host names separated by commas. If a host name is used, the system checks upon closing or saving of the dialog whether the host name can be translated into an IP address. If this is not the case, the user receives an error message and the dialog box is not closed. If you enter a valid host name, this host name will be translated into an IP address upon every startup of the control. If a computer that was entered with its name changes its IP address, you may have to restart the control or formally change the firewall configuration to ensure that the control uses the new IP address for a host name in the firewall.
Advanced options	These settings are only intended for your network specialists.
Set standard values	Resets the settings to the default values recommended by HEIDENHAIN

15.13 Load machine configuration

Application

> **!** Caution: Data loss!
> The TNC overwrites your machine configuration when you load (restore) a backup. The overwritten machine data will be lost in the process. You can no longer undo this process!

Your machine tool builder can provide you a backup with a machine configuration. After entering the keyword **RESTORE**, you can load the backup on your machine or programming station. Proceed as follows to load the backup:

- In the MOD dialog, enter the keyword **RESTORE**
- In the TNC's file manager, select the backup file (e.g. BKUP-2013-12-12_.zip). The TNC opens a pop-up window for the backup
- Press the emergency stop
- Press the **OK** soft key to start the backup process

16

Fundamentals / Overviews

16.1 Introduction

Frequently recurring machining cycles that comprise several working steps are stored in the TNC memory as standard cycles. Coordinate transformations and several special functions are also available as cycles. Most cycles use Q parameters as transfer parameters.

Danger of collision!

Cycles sometimes execute extensive operations. For safety reasons, you should run a graphical program test before machining.

If you use indirect parameter assignments in cycles with numbers greater than 200 (e.g. **Q210 = Q1**), any change in the assigned parameter (e.g. Q1) will have no effect after the cycle definition. Define the cycle parameter (e.g. **Q210**) directly in such cases.

If you define a feed-rate parameter for fixed cycles greater than 200, then instead of entering a numerical value you can use soft keys to assign the feed rate defined in the **TOOL CALL** block (**FAUTO** soft key). You can also use the feed-rate alternatives **FMAX** (rapid traverse), **FZ** (feed per tooth) and **FU** (feed per rev), depending on the respective cycle and the function of the feed-rate parameter.

Note that, after a cycle definition, a change of the **FAUTO** feed rate has no effect, because internally the TNC assigns the feed rate from the **TOOL CALL** block when processing the cycle definition.

If you want to delete a block that is part of a cycle, the TNC asks you whether you want to delete the whole cycle.

16.2 Available Cycle Groups

Overview of fixed cycles

CYCL DEF

- The soft-key row shows the available groups of cycles

Cycle group	Soft key	Page
Cycles for pecking, reaming, boring, tapping and counterboring	DRILLING/ THREAD	412
Cycles for milling rectangular pockets and rectangular studs	POCKETS/ STUDS/ SLOTS	446
Coordinate transformation cycles which enable datum shift, rotation, mirror image, enlarging and reducing for various contours	COORD. TRANSF.	470
Cycles for producing point patterns	PATTERN	404
Special cycles such as dwell time, program call, oriented spindle stop	SPECIAL CYCLES	486

▷

- If required, switch to machine-specific fixed cycles. These fixed cycles can be integrated by your machine tool builder.

16.3 Working with fixed cycles

Machine-specific cycles

In addition to the HEIDENHAIN cycles, many machine tool builders offer their own cycles in the TNC. These cycles are available in a separate cycle-number range:

- Cycles 300 to 399
  Machine-specific cycles that are to be defined through the **CYCLE DEF** key
- Cycles 500 to 599
  Machine-specific touch probe cycles that are to be defined through the **CYCL DEF** key

Refer to your machine manual for a description of the specific function.

Sometimes machine-specific cycles use transfer parameters that HEIDENHAIN already uses in standard cycles. The TNC executes DEF-active cycles as soon as they are defined (see "Calling a cycle", page 396). It executes CALL-active cycles only after they have been called (see "Calling a cycle", page 396). When DEF-active cycles and CALL-active cycles are used simultaneously, it is important to prevent overwriting of transfer parameters already in use. Use the following procedure:

- As a rule, always program DEF-active cycles before CALL-active cycles
- If you do want to program a DEF-active cycle between the definition and call of a CALL-active cycle, do it only if there is no common use of specific transfer parameters

Defining a cycle using soft keys

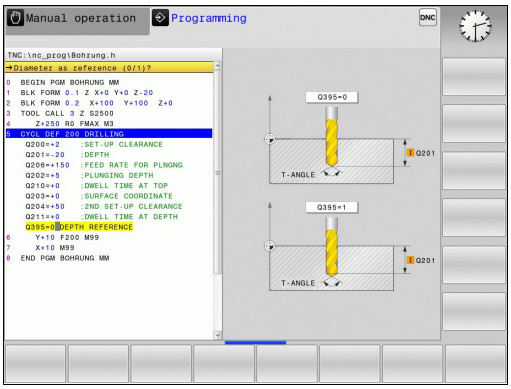

CYCL DEF

- The soft-key row shows the available groups of cycles

DRILLING/ THREAD

- Press the soft key for the desired group of cycles, for example DRILLING for the drilling cycles

262

- Select the cycle, e.g. DRILLING. The TNC initiates the programming dialog and asks for all required input values. At the same time a graphic of the input parameters is displayed in the right screen window.
- Enter all parameters requested by the TNC and conclude each entry with the **ENT** key
- The TNC ends the dialog when all required data has been entered

Defining a cycle using the GOTO function

CYCL DEF

- The soft-key row shows the available groups of cycles

GOTO

- The TNC shows an overview of cycles in a pop-up window
- Choose the desired cycle with the arrow keys, or
- Enter the cycle number and confirm it with the **ENT** key. The TNC then initiates the cycle dialog as described above

Example NC blocks

7 CYCL DEF 200	
Q200=2	;
Q201=3	;
Q206=150	;FEED RATE FOR PLNGNG
Q202=5	;
Q210=0	;
Q203=+0	;SURFACE COORDINATE
Q204=50	;
Q211=0.25	;
Q395=0	;DEPTH REFERENCE

Calling a cycle

Prerequisites

The following data must always be programmed before a cycle call:

- **BLK FORM** for graphic display (needed only for test graphics)
- Tool call
- Direction of spindle rotation (M functions M3/M4)
- Cycle definition (CYCL DEF)

For some cycles, additional prerequisites must be observed. They are detailed in the descriptions for each cycle.

The following cycles become effective automatically as soon as they are defined in the part program. These cycles cannot and must not be called:

- Cycle 220 for point patterns on circles and Cycle 221 for point patterns on lines
- Coordinate transformation cycles
- Cycle 9 DWELL TIME
- All touch probe cycles

You can call all other cycles with the functions described as follows.

Calling a cycle with CYCL CALL

The **CYCL CALL** function calls the most recently defined fixed cycle once. The starting point of the cycle is the position that was programmed last before the CYCL CALL block.

CYCL CALL

- To program the cycle call, press the **CYCL CALL** key
- Press the **CYCL CALL M** soft key to enter a cycle call
- If necessary, enter the miscellaneous function M (for example **M3** to switch the spindle on), or end the dialog by pressing the **END** key

Calling a cycle with CYCL CALL PAT

The **CYCL CALL PAT** function calls the most recently defined fixed cycle at all positions that you defined in a PATTERN DEF pattern definition (see "PATTERN DEF pattern definition", page 398) or in a point table (see "Point tables", page 408).

Cycle call with M99/M89

The **M99** function, which is active only in the block in which it is programmed, calls the last defined fixed cycle once. You can program **M99** at the end of a positioning block. The TNC moves to this position and then calls the last defined fixed cycle.

If the TNC is to run the cycle automatically after every positioning block, program the first cycle call with **M89**.

To cancel the effect of **M89**, program:

- **M99** in the positioning block in which you move to the last starting point, or
- Use **CYCL DEF** to define a new fixed cycle

16.4 PATTERN DEF pattern definition

Application

You use the **PATTERN DEF** function to easily define regular machining patterns, which you can call with the **CYCL CALL PAT** function. As with the cycle definitions, support graphics that illustrate the respective input parameter are also available for pattern definitions.

> **!** **PATTERN DEF** is to be used only in connection with the tool axis Z.

The following machining patterns are available:

Machining patterns	Soft key	Page
POINT Definition of up to any 9 machining positions	POINT	399
ROW Definition of a single row, straight or rotated	ROW	400
PATTERN Definition of a single pattern, straight, rotated or distorted	PATTERN	401
FRAME Definition of a single frame, straight, rotated or distorted	FRAME	402
CIRCLE Definition of a full circle	CIRCLE	403
PITCH CIRCLE Definition of a pitch circle	PITCH CIR	403

Entering PATTERN DEF

- Select the **Programming** mode of operation
- Press the SPEC FCT key
- Select the functions for contour and point machining
- Open a **PATTERN DEF** block
- Select the desired machining pattern, e.g. a single row
- Enter the required definitions, and confirm each entry with the ENT key

Using PATTERN DEF

As soon as you have entered a pattern definition, you can call it with the **CYCL CALL PAT** function "Calling a cycle", page 396. The TNC then performs the most recently defined machining cycle on the machining pattern you defined.

> A machining pattern remains active until you define a new one, or select a point table with the **SEL PATTERN** function.
>
> You can use the mid-program startup function to select any point at which you want to start or continue machining see "Any entry into program (mid-program startup)", page 355.

Defining individual machining positions

> You can enter up to 9 machining positions. Confirm each entry with the **ENT** key.
>
> If you have defined a **workpiece surface in Z** not equal to 0, then this value is effective in addition to the workpiece surface **Q203** that you defined in the machining cycle.

POINT

- **X coord. of machining position** (absolute): Enter X coordinate
- **Y coord. of machining position** (absolute): Enter Y coordinate
- **Coordinate of workpiece surface** (absolute): Enter Z coordinate at which machining is to begin

NC blocks

```
10 Z+100 R0 FMAX
11 PATTERN DEF POS1
   (X+25 Y+33.5 Z+0) POS2 (X+50 Y
   +75 Z+0)
```

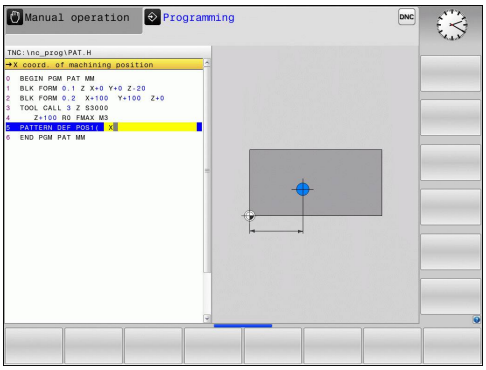

Defining a single row

If you have defined a **workpiece surface in Z** not equal to 0, then this value is effective in addition to the workpiece surface **Q203** that you defined in the machining cycle.

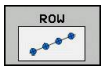

- **Starting point in X** (absolute): Coordinate of the starting point of the row in the X axis
- **Starting point in Y** (absolute): Coordinate of the starting point of the row in the Y axis
- **Spacing of machining positions (incremental)**: Distance between the machining positions. You can enter a positive or negative value
- **Number of repetitions**: Total number of machining operations
- **Rot. position of entire pattern (absolute)**: Angle of rotation around the entered starting point. Reference axis: Reference axis of the active machining plane (e.g. X for tool axis Z). You can enter a positive or negative value
- **Coordinate of workpiece surface** (absolute): Enter Z coordinate at which machining is to begin

NC blocks

```
10 Z+100 R0 FMAX
11 PATTERN DEF ROW1
   (X+25 Y+33.5 D+8 NUM5 ROT+0 Z
   +0)
```

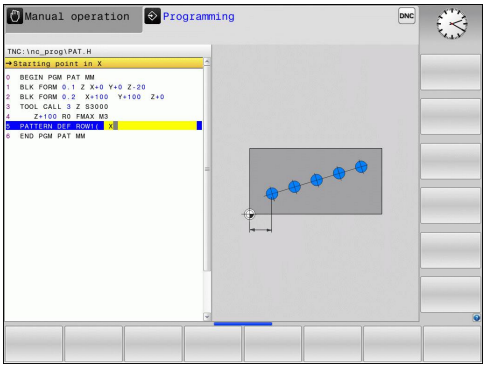

Defining a single pattern

If you have defined a **workpiece surface in Z** not equal to 0, then this value is effective in addition to the workpiece surface **Q203** that you defined in the machining cycle.

The **Rotary pos. ref. ax.** and **Rotary pos. minor ax.** parameters are added to a previously performed **rotated position** of the entire pattern.

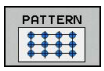

- **Starting point in X** (absolute): Coordinate of the starting point of the pattern in the X axis
- **Starting point in Y** (absolute): Coordinate of the starting point of the pattern in the Y axis
- **Spacing of machining positions X (incremental)**: Distance between the machining positions in the X direction. You can enter a positive or negative value
- **Spacing of machining positions Y (incremental)**: Distance between the machining positions in the Y direction. You can enter a positive or negative value
- **Number of columns**: Total number of columns in the pattern
- **Number of lines**: Total number of rows in the pattern
- **Rot. position of entire pattern (absolute)**: Angle of rotation by which the entire pattern is rotated around the entered starting point. Reference axis: Reference axis of the active machining plane (e.g. X for tool axis Z). You can enter a positive or negative value
- **Rotary pos. ref. ax.**: Angle of rotation around which only the reference axis of the machining plane is distorted with respect to the entered starting point. You can enter a positive or negative value.
- **Rotary pos. minor ax.**: Angle of rotation around which only the minor axis of the machining plane is distorted with respect to the entered starting point. You can enter a positive or negative value.
- **Workpiece surface coordinate** (absolute): Enter Z coordinate at which machining is to begin

NC blocks

```
10 Z+100 R0 FMAX
11 PATTERN DEF PAT1 (X+25 Y+33.5
   DX+8 DY+10 NUMX5 NUMY4 ROT+0
   ROTX+0 ROTY+0 Z+0)
```

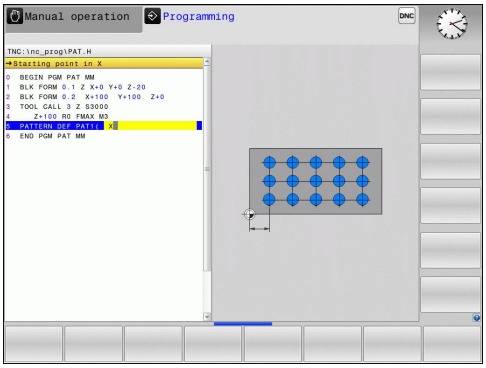

Defining individual frames

If you have defined a **workpiece surface in Z** not equal to 0, then this value is effective in addition to the workpiece surface **Q203** that you defined in the machining cycle.

The **Rotary pos. ref. ax.** and **Rotary pos. minor ax.** parameters are added to a previously performed **rotated position** of the entire pattern.

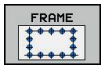

- **Starting point in X** (absolute): Coordinate of the starting point of the frame in the X axis
- **Starting point in Y** (absolute): Coordinate of the starting point of the frame in the Y axis
- **Spacing of machining positions X (incremental)**: Distance between the machining positions in the X direction. You can enter a positive or negative value
- **Spacing of machining positions Y (incremental)**: Distance between the machining positions in the Y direction. You can enter a positive or negative value
- **Number of columns**: Total number of columns in the pattern
- **Number of lines**: Total number of rows in the pattern
- **Rot. position of entire pattern (absolute)**: Angle of rotation by which the entire pattern is rotated around the entered starting point. Reference axis: Reference axis of the active machining plane (e.g. X for tool axis Z). You can enter a positive or negative value
- **Rotary pos. ref. ax.**: Angle of rotation around which only the reference axis of the machining plane is distorted with respect to the entered starting point. You can enter a positive or negative value
- **Rotary pos. minor ax.**: Angle of rotation around which only the minor axis of the machining plane is distorted with respect to the entered starting point. You can enter a positive or negative value.
- **Coordinate of workpiece surface** (absolute): Enter Z coordinate at which machining is to begin

NC blocks

```
10 Z+100 R0 FMAX
11 PATTERN DEF FRAME1
   (X+25 Y+33.5 DX+8 DY+10 NUMX5
   NUMY4 ROT+0 ROTX+0 ROTY+0 Z
   +0)
```

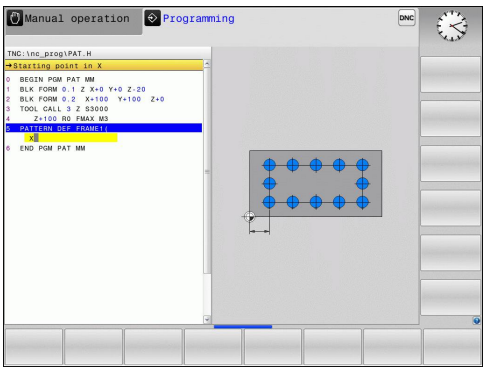

Defining a full circle

If you have defined a **workpiece surface in Z** not equal to 0, then this value is effective in addition to the workpiece surface **Q203** that you defined in the machining cycle.

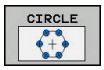

- **Bolt-hole circle center X** (absolute): Coordinate of the circle center in the X axis
- **Bolt-hole circle center Y** (absolute): Coordinate of the circle center in the Y axis
- **Bolt-hole circle diameter**: Diameter of the bolt-hole circle
- **Starting angle**: Polar angle of the first machining position. Reference axis: Reference axis of the active machining plane (e.g. X for tool axis Z). You can enter a positive or negative value
- **Number of repetitions**: Total number of machining positions on the circle
- **Coordinate of workpiece surface** (absolute): Enter Z coordinate at which machining is to begin

NC blocks

```
10 Z+100 R0 FMAX
11 PATTERN DEF CIRC1
   (X+25 Y+33 D80 START+45 NUM8 Z
   +0)
```

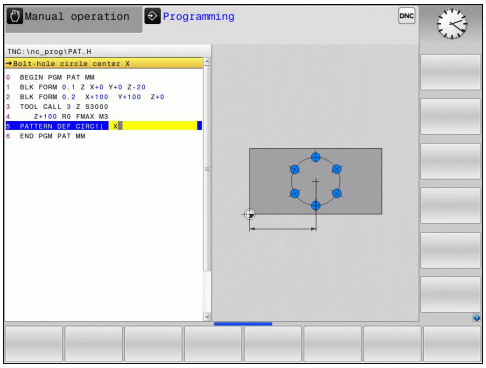

Defining a pitch circle

If you have defined a **workpiece surface in Z** not equal to 0, then this value is effective in addition to the workpiece surface **Q203** that you defined in the machining cycle.

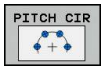

- **Bolt-hole circle center X** (absolute): Coordinate of the circle center in the X axis
- **Bolt-hole circle center Y** (absolute): Coordinate of the circle center in the Y axis
- **Bolt-hole circle diameter**: Diameter of the bolt-hole circle
- **Starting angle**: Polar angle of the first machining position. Reference axis: Major axis of the active machining plane (e.g. X for tool axis Z). You can enter a positive or negative value
- **Stepping angle/end angle**: Incremental polar angle between two machining positions. You can enter a positive or negative value As an alternative you can enter the end angle (switch via soft key).
- **Number of repetitions**: Total number of machining positions on the circle
- **Coordinate of workpiece surface** (absolute): Enter Z coordinate at which machining is to begin

NC blocks

```
10 Z+100 R0 FMAX
11 PATTERN DEF PITCHCIRC1
   (X+25 Y+33 D80 START+45 STEP30
   NUM8 Z+0)
```

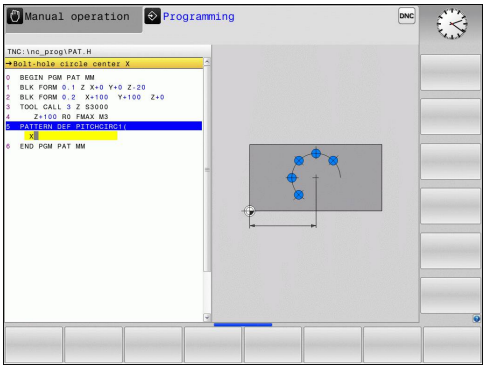

16.5 POLAR PATTERN (Cycle 220)

Cycle run

1 At rapid traverse, the TNC moves the tool from its current position to the starting point for the first machining operation.

Sequence:

- 2. Move to the 2nd set-up clearance (spindle axis)
- Approach the starting point in the spindle axis.
- Move to the set-up clearance above the workpiece surface (spindle axis).

2 From this position, the TNC executes the last defined fixed cycle.

3 The tool then approaches on a straight line the starting point for the next machining operation. The tool stops at the set-up clearance (or the 2nd set-up clearance).

4 This process (1 to 3) is repeated until all machining operations have been executed.

Please note while programming:

Cycle 220 is DEF active, which means that Cycle 220 automatically calls the last defined fixed cycle.

If you combine Cycle 220 with one of the fixed cycles 200 to 207 and 251, 253 and 256, the set-up clearance, workpiece surface and 2nd set-up clearance from Cycle 220 will be effective for the selected fixed cycle.

If you run this cycle in the Single Block mode of operation, the control stops between the individual points of a point pattern.

Cycle parameters

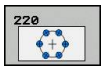

- **Center in 1st axis** Q216 (absolute): Center of the pitch circle in the reference axis of the working plane. Input range -99999.9999 to 99999.9999
- **Center in 2nd axis** Q217 (absolute): Center of the pitch circle in the minor axis of the working plane. Input range -99999.9999 to 99999.9999
- **Pitch circle diameter** Q244: Diameter of the pitch circle. Input range 0 to 99999.9999
- **Starting angle** Q245 (absolute): Angle between the reference axis of the working plane and the starting point for the first machining operation on the pitch circle. Input range -360.000 to 360.000
- **Stopping angle** Q246 (absolute): Angle between the reference axis of the working plane and the starting point for the last machining operation on the pitch circle (does not apply to full circles). Do not enter the same value for the stopping angle and starting angle. If you enter the stopping angle greater than the starting angle, machining will be carried out counterclockwise; otherwise, machining will be clockwise. Input range -360.000 to 360.000
- **Stepping angle** Q247 (incremental): Angle between two machining operations on a pitch circle. If you enter an angle step of 0, the TNC will calculate the angle step from the starting and stopping angles and the number of pattern repetitions. If you enter a value other than 0, the TNC will not take the stopping angle into account. The sign for the angle step determines the working direction (negative = clockwise). Input range -360.000 to 360.000
- **Number of repetitions** Q241: Number of machining operations on a pitch circle. Input range 1 to 99999
- **Set-up clearance** Q200 (incremental): Distance between tool tip and workpiece surface. Input range 0 to 99999.9999
- **2nd set-up clearance** Q204 (incremental): Coordinate in the spindle axis at which no collision between tool and workpiece (fixtures) can occur. Input range 0 to 99999.9999
- **Traversing to clearance height** Q301: Definition of how the touch probe is to move between machining operations:
  0: Move at set-up clearance between machining operations
  1: Move at 2nd set-up clearance between machining operations

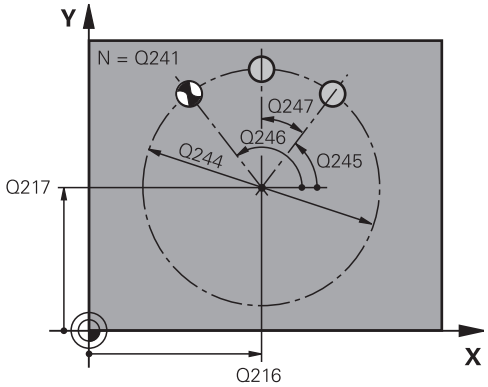

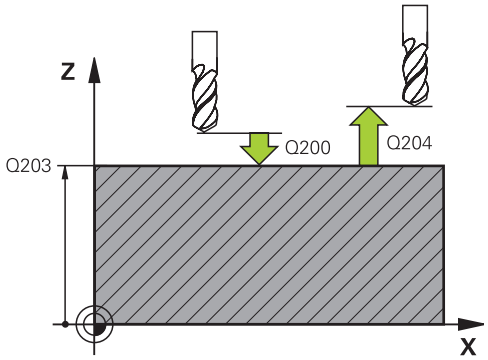

NC blocks

```
53 CYCL DEF 220 POLAR PATTERN
    Q216=+50   ;CENTER IN 1ST AXIS
    Q217=+50   ;CENTER IN 2ND AXIS
    Q244=80    ;PITCH CIRCLE DIA.
    Q245=+0    ;STARTING ANGLE
    Q246=+360;STOPPING ANGLE
    Q247=+0    ;STEPPING ANGLE
    Q241=8     ;NR OF REPETITIONS
    Q200=2     ;SET-UP CLEARANCE
    Q203=+30   ;SURFACE COORDINATE
    Q204=50    ;2ND SET-UP
               CLEARANCE
    Q301=1     ;MOVE TO CLEARANCE
```

16.6 LINEAR PATTERN (Cycle 221)

Cycle run

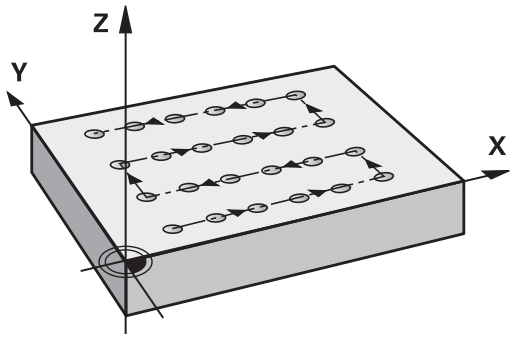

1 The TNC automatically moves the tool from its current position to the starting point for the first machining operation.
   Sequence:
   - 2. Move to the set-up clearance (spindle axis)
   - Approach the starting point in the machining plane
   - Move to the set-up clearance above the workpiece surface (spindle axis)
2 From this position, the TNC executes the last defined fixed cycle.
3 The tool then approaches the starting point for the next machining operation in the positive reference axis direction at set-up clearance (or 2nd set-up clearance).
4 This process (1 to 3) is repeated until all machining operations on the first line have been executed. The tool is located above the last point on the first line.
5 The tool subsequently moves to the last point on the second line where it carries out the machining operation.
6 From this position, the tool approaches the starting point for the next machining operation in the negative reference axis direction.
7 This process (6) is repeated until all machining operations in the second line have been executed.
8 The tool then moves to the starting point of the next line.
9 All subsequent lines are processed in a reciprocating movement.

Please note while programming:

Cycle 221 is DEF active, which means that Cycle 221 automatically calls the last defined fixed cycle.

If you combine Cycle 221 with one of the fixed cycles 200 to 207 and 251, 253 and 256, the set-up clearance, workpiece surface, 2nd set-up clearance and rotational position that you defined in Cycle 221 will be effective for the selected fixed cycle.

If you run this cycle in the Single Block mode of operation, the control stops between the individual points of a point pattern.

Cycle parameters

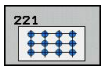

- **Starting point in 1st axis** Q225 (absolute): Coordinate of the starting point in the reference axis of the working plane.
- **Starting point 2nd axis** Q226 (absolute): Coordinate of the starting point in the minor axis of the machining plane
- **Spacing in 1st axis** Q237 (incremental): Spacing between each point on a line
- **Spacing in 2nd axis** Q238 (incremental): Spacing between each line
- **Number of columns** Q242: Number of machining operations on a line
- **Number of lines** Q243: Number of lines
- **Angle of rotation** Q224 (absolute): Angle by which the entire pattern is rotated. The center of rotation lies in the starting point
- **Set-up clearance** Q200 (incremental): Distance between tool tip and workpiece surface. Input range 0 to 99999.9999
- **Coordinate of workpiece surface** Q203 (absolute): Coordinate of the workpiece surface. Input range -99999.9999 to 99999.9999
- **2nd set-up clearance** Q204 (incremental): Coordinate in the spindle axis at which no collision between tool and workpiece (fixtures) can occur. Input range 0 to 99999.9999
- **Traversing to clearance height** Q301: Definition of how the touch probe is to move between machining operations:
  0: Move at set-up clearance between machining operations
  1: Move at 2nd set-up clearance between machining operations

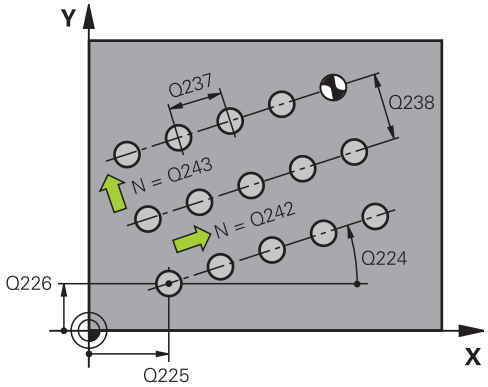

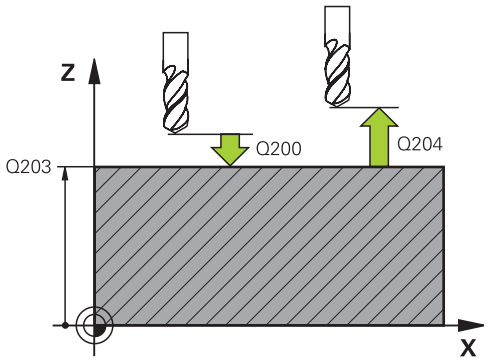

NC blocks

54 CYCL DEF 221 CARTESIAN PATTERN	
Q225=+15	;STARTNG PNT 1ST AXIS
Q226=+15	;STARTNG PNT 2ND AXIS
Q237=+10	;SPACING IN 1ST AXIS
Q238=+8	;SPACING IN 2ND AXIS
Q242=6	;NUMBER OF COLUMNS
Q243=4	;NUMBER OF LINES
Q224=+15	;ANGLE OF ROTATION
Q200=2	;SET-UP CLEARANCE
Q203=+30	;SURFACE COORDINATE
Q204=50	;2ND SET-UP CLEARANCE
Q301=1	;MOVE TO CLEARANCE

16.7 Point tables

Application

You should create a point table whenever you want to run a cycle, or several cycles in sequence, on an irregular point pattern.

If you are using drilling cycles, the coordinates of the working plane in the point table represent the hole centers. If you are using milling cycles, the coordinates of the working plane in the point table represent the starting-point coordinates of the respective cycle (e.g. center-point coordinates of a circular pocket). Coordinates in the spindle axis correspond to the coordinate of the workpiece surface.

Creating a point table

- Select the **Programming** mode of operation
- Call the file manager: Press the **PGM MGT** key.

FILE NAME?

- Enter the name and file type of the point table and confirm your entry with the **ENT** key.
- Select the unit of measure: Press the **MM** or **INCH** soft key. The TNC changes to the program blocks window and displays an empty point table.
- With the **INSERT LINE** soft key, insert new lines and enter the coordinates of the desired machining position.

Repeat the process until all desired coordinates have been entered.

> The name of the point table must begin with a letter.
> Use the soft keys **X OFF/ON**, **Y OFF/ON**, **Z OFF/ON** (second soft-key row) to specify which coordinates you want to enter in the point table.

Hiding single points from the machining process

In the **FADE** column of the point table you can specify if the defined point is to be hidden during the machining process.

- In the table, select the point to be hidden

- Select the **FADE** column

- Activate hiding, or

- Deactivate hiding

Selecting a point table in the program

In the **Programming** mode of operation, select the program for which you want to activate the point table:

- Press the **PGM CALL** key to call the function for selecting the point table

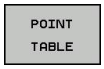

- Press the **POINT TABLE** soft key

Enter the name of the point table and confirm your entry with the **END** key. If the point table is not stored in the same directory as the NC program, you must enter the complete path.

Example NC block

```
7 SEL PATTERN "TNC:\DIRKT5\NUST35.PNT"
```

Calling a cycle in connection with point tables

> With **CYCL CALL PAT** the TNC runs the point table that you last defined (even if you defined the point table in a program that was nested with **CALL PGM).**

If you want the TNC to call the last defined fixed cycle at the points defined in a point table, then program the cycle call with **CYCLE CALL PAT**:

CYCL CALL

- To program the cycle call, press the **CYCL CALL** key
- Press the **CYCL CALL PAT** soft key to call a point table
- Enter the feed rate at which the TNC is to move from point to point (if you make no entry the TNC will move at the last programmed feed rate; **FMAX** is not valid)
- If required, enter a miscellaneous function M, then confirm with the **END** key

The TNC retracts the tool to the clearance height between the starting points. Depending on which is greater, the TNC uses either the spindle axis coordinate from the cycle call or the value from cycle parameter Q204 as the clearance height.

If you want to move at reduced feed rate when pre-positioning in the spindle axis, use the miscellaneous function M103.

Effect of the point table with Cycles 200 to 207

The TNC interprets the points of the working plane as coordinates of the hole centers. If you want to use the coordinate defined in the point table for the spindle axis as the starting point coordinate, you must define the workpiece surface coordinate (Q203) as 0.

Effect of the point table with Cycles 251, 253 and 256

The TNC interprets the points of the working plane as coordinates of the cycle starting point. If you want to use the coordinate defined in the point table for the spindle axis as the starting point coordinate, you must define the workpiece surface coordinate (Q203) as 0.

17

Drilling, boring and thread cycles

17.1 Fundamentals

Overview

The TNC offers the following cycles for all types of drilling and threading operations:

Cycle	Soft key	Page
240 CENTERING With automatic pre-positioning, 2nd set-up clearance, optional entry of the centering diameter or centering depth		413
200 DRILLING With automatic pre-positioning, 2nd set-up clearance		415
201 REAMING With automatic pre-positioning, 2nd set-up clearance		417
202 BORING With automatic pre-positioning, 2nd set-up clearance		419
203 UNIVERSAL DRILLING With automatic pre-positioning, 2nd set-up clearance, chip breaking, and decrementing		422
204 BACK BORING With automatic pre-positioning, 2nd set-up clearance		425
205 UNIVERSAL PECKING With automatic pre-positioning, 2nd set-up clearance, chip breaking, and advanced stop distance	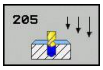	428
206 TAPPING With floating tap holder, 2nd set-up clearance, dwell time at depth		438
207 RIGID TAPPING With thread depth and thread pitch		440
241 SINGLE-LIP D.H.DRLNG With automatic pre-positioning to deepened starting point, shaft speed and coolant definition	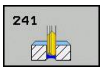	432

17.2 CENTERING (Cycle 240)

Cycle run

1 The TNC positions the tool in the tool axis at rapid traverse **FMAX** to set-up clearance above the workpiece surface.
2 The tool is centered at the programmed feed rate **F** to the programmed centering diameter or centering depth.
3 If defined, the tool remains at the centering depth.
4 Finally, the tool path is retraced to setup clearance or—if programmed—to the 2nd setup clearance at rapid traverse **FMAX**.

Please note while programming:

Program a positioning block for the starting point (hole center) in the working plane with radius compensation **R0**.

The algebraic sign for the cycle parameter **Q344** (diameter) or **Q201** (depth) determines the working direction. If you program the diameter or depth = 0, the cycle will not be executed.

Danger of collision!

Use the machine parameter **displayDepthErr** to define whether, if a positive depth is entered, the TNC should output an error message (on) or not (off).

Keep in mind that the TNC reverses the calculation for pre-positioning when a **positive diameter or depth is entered.** This means that the tool moves at rapid traverse in the tool axis to set-up clearance **below** the workpiece surface!

Cycle parameters

- **Set-up clearance** Q200 (incremental): Distance between tool tip and workpiece surface. Enter a positive value. Input range 0 to 99999.9999
- **Select depth/diameter (0/1)** Q343: Select whether centering is based on the entered diameter or depth. If the TNC is to center based on the entered diameter, the point angle of the tool must be defined in the **T ANGLE** column of the tool table TOOL.T.
  0: Centering based on the entered depth
  1: Centering based on the entered diameter
- **Depth** Q201 (incremental): Distance between workpiece surface and centering bottom (tip of centering taper). Only effective if Q343=0 is defined. Input range -99999.9999 to 99999.9999
- **Diameter (algebraic sign)** Q344: Centering diameter. Only effective if Q343=1 is defined. Input range -99999.9999 to 99999.9999
- **Feed rate for plunging** Q206: Traversing speed of the tool during centering in mm/min. Input range: 0 to 99999.999; alternatively **FAUTO**, **FU**
- **Dwell time at depth** Q211: Time in seconds that the tool remains at the hole bottom. Input range 0 to 3600.0000
- **Coordinate of workpiece surface** Q203 (absolute): Coordinate of the workpiece surface. Input range -99999.9999 to 99999.9999
- **2nd set-up clearance** Q204 (incremental): Coordinate in the spindle axis at which no collision between tool and workpiece (fixtures) can occur. Input range 0 to 99999.9999

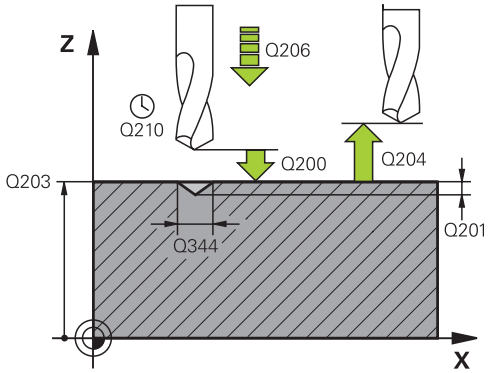

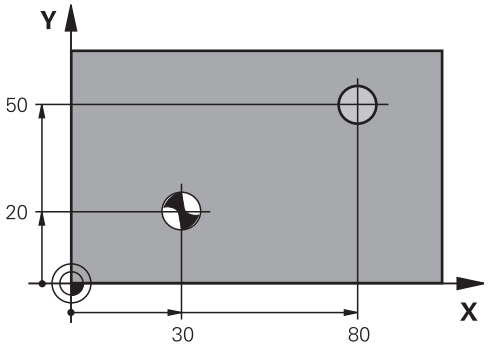

NC blocks

```
11 CYCL DEF 240
    Q200=2      ;
    Q343=1      ;SELECT DIA./DEPTH
    Q201=+0     ;
    Q344=-9     ;
    Q206=250    ;FEED RATE FOR
                PLNGNG
    Q211=0.1    ;
    Q203=+20    ;SURFACE COORDINATE
    Q204=100    ;
12 X+30 R0 FMAX
13 Y+20 R0 FMAX M3 M99
14 X+80 R0 FMAX
15 Y+50 R0 FMAX M99
```

17.3 DRILLING (Cycle 200)

Cycle run

1 The TNC positions the tool in the tool axis at rapid traverse **FMAX** to set-up clearance above the workpiece surface.
2 The tool drills to the first plunging depth at the programmed feed rate **F**.
3 The TNC returns the tool at **FMAX** to the set-up clearance, dwells there (if a dwell time was entered), and then moves at **FMAX** to the set-up clearance above the first plunging depth.
4 The tool then drills deeper by the plunging depth at the programmed feed rate F.
5 The TNC repeats this process (2 to 4) until the programmed total hole depth is reached.
6 Finally, the tool path is retraced to setup clearance from the hole bottom or—if programmed—to the 2nd setup clearance at **FMAX**.

Please note while programming:

Program a positioning block for the starting point (hole center) in the working plane with radius compensation **R0**.

The algebraic sign for the cycle parameter DEPTH determines the working direction. If you program DEPTH=0, the cycle will not be executed.

Danger of collision!

Use the machine parameter **displayDepthErr** to define whether, if a positive depth is entered, the TNC should output an error message (on) or not (off).

Keep in mind that the TNC reverses the calculation for pre-positioning when a **positive depth is entered**. This means that the tool moves at rapid traverse in the tool axis to set-up clearance **below** the workpiece surface!

Cycle parameters

- **Set-up clearance** Q200 (incremental): Distance between tool tip and workpiece surface. Enter a positive value. Input range 0 to 99999.9999
- **Depth** Q201 (incremental): Distance between workpiece surface and bottom of hole. Input range -99999.9999 to 99999.9999
- **Feed rate for plunging** Q206: Traversing speed of the tool in mm/min during drilling. Input range 0 to 99999.999, alternatively **FAUTO**, **FU**
- **Plunging depth** Q202 (incremental): Infeed per cut. Input range 0 to 99999.9999. The depth does not have to be a multiple of the plunging depth. The TNC will go to depth in one movement if:
  - the plunging depth is equal to the depth
  - the plunging depth is greater than the depth
- **Dwell time at top** Q210: Time in seconds that the tool remains at set-up clearance after having been retracted from the hole for chip removal. Input range 0 to 3600.0000
- **Coordinate of workpiece surface** Q203 (absolute): Coordinate of the workpiece surface. Input range -99999.9999 to 99999.9999
- **2nd set-up clearance** Q204 (incremental): Coordinate in the spindle axis at which no collision between tool and workpiece (fixtures) can occur. Input range 0 to 99999.9999
- **Dwell time at depth** Q211: Time in seconds that the tool remains at the hole bottom. Input range 0 to 3600.0000
- **Depth reference** Q395: Select whether the entered depth is referenced to the tool tip or the cylindrical part of the tool. If the TNC is to reference the depth to the cylindrical part of the tool, the point angle of the tool must be defined in the T ANGLE column of the tool table TOOL.T.
  0 = Depth referenced to the tool tip
  1 = Depth referenced to the cylindrical part of the tool

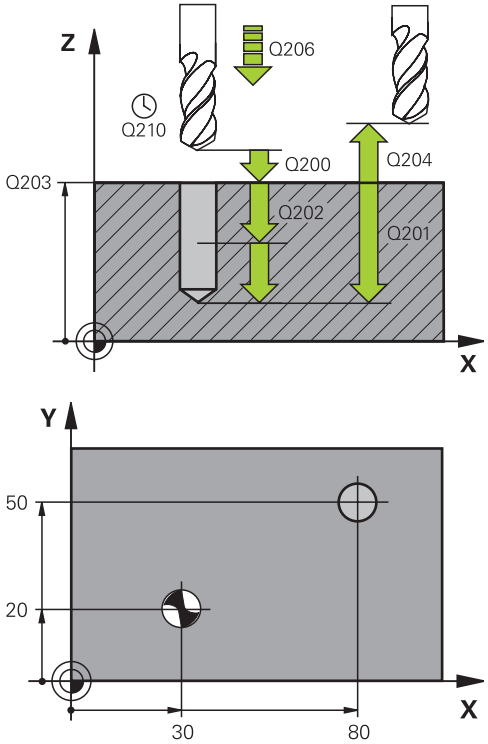

NC blocks

11 CYCL DEF 200 DRILLING	
Q200=2	;SET-UP CLEARANCE
Q201=-15	;DEPTH
Q206=250	;FEED RATE FOR PLNGNG
Q202=5	;PLUNGING DEPTH
Q211=0	;DWELL TIME AT TOP
Q203=+20	;SURFACE COORDINATE
Q204=100	;2ND SET-UP CLEARANCE
Q211=0.1	;DWELL TIME AT BOTTOM
Q395=0	;DEPTH REFERENCE
12 X+30 FMAX	
13 Y+20 FMAX M3 M99	
14 X+80 FMAX	
15 Y+50 FMAX M99	

17.4 REAMING (Cycle 201)

Cycle run

1 The TNC positions the tool in the tool axis at rapid traverse **FMAX** to the entered set-up clearance above the workpiece surface.
2 The tool reams to the entered depth at the programmed feed rate **F**.
3 If programmed, the tool remains at the hole bottom for the entered dwell time.
4 The tool then retracts to set-up clearance at the feed rate F, and from there—if programmed—to the 2nd set-up clearance in **FMAX**.

Please note while programming:

Program a positioning block for the starting point (hole center) in the working plane with radius compensation **R0**.

The algebraic sign for the cycle parameter DEPTH determines the working direction. If you program DEPTH=0, the cycle will not be executed.

Danger of collision!

Use the machine parameter **displayDepthErr** to define whether, if a positive depth is entered, the TNC should output an error message (on) or not (off).

Keep in mind that the TNC reverses the calculation for pre-positioning when a **positive depth is entered**. This means that the tool moves at rapid traverse in the tool axis to set-up clearance **below** the workpiece surface!

Cycle parameters

- **Set-up clearance** Q200 (incremental): Distance between tool tip and workpiece surface. Input range 0 to 99999.9999
- **Depth** Q201 (incremental): Distance between workpiece surface and bottom of hole. Input range -99999.9999 to 99999.9999
- **Feed rate for plunging** Q206: Traversing speed of the tool during reaming in mm/min. Input range 0 to 99999.999; alternatively **FAUTO**, **FU**
- **Dwell time at depth** Q211: Time in seconds that the tool remains at the hole bottom. Input range 0 to 3600.0000
- **Retraction feed rate** Q208: Traversing speed of the tool in mm/min when retracting from the hole. If you enter Q208 = 0, the tool retracts at the reaming feed rate. Input range 0 to 99999.999
- **Coordinate of workpiece surface** Q203 (absolute): Coordinate of the workpiece surface. Input range 0 to 99999.9999
- **2nd set-up clearance** Q204 (incremental): Coordinate in the spindle axis at which no collision between tool and workpiece (fixtures) can occur. Input range 0 to 99999.9999

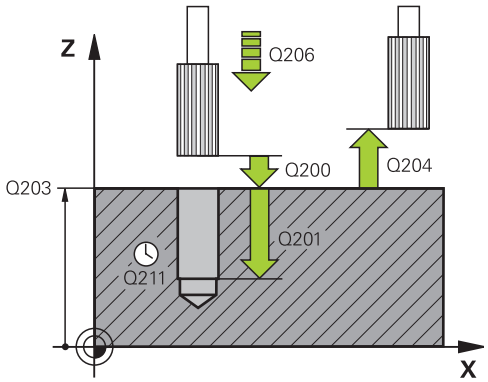

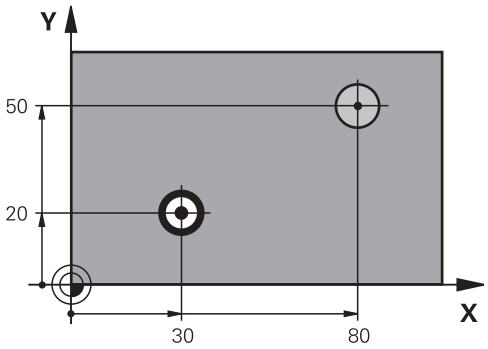

NC blocks

11 CYCL DEF 201 REAMING	
Q200=2	;SET-UP CLEARANCE
Q201=-15	;DEPTH
Q206=100	;FEED RATE FOR PLNGNG
Q211=0.5	;DWELL TIME AT BOTTOM
Q208=250	;RETRACTION FEED RATE
Q203=+20	;SURFACE COORDINATE
Q204=100	;2ND SET-UP CLEARANCE
12 X+30 FMAX	
13 Y+20 FMAX M3 M99	
14 X+80 FMAX	
15 Y+50 FMAX M9	

17.5 BORING (Cycle 202)

Cycle run

1 The TNC positions the tool in the tool axis at rapid traverse **FMAX** to set-up clearance above the workpiece surface.
2 The tool drills to the programmed depth at the feed rate for plunging.
3 If programmed, the tool remains at the hole bottom for the entered dwell time with active spindle rotation for cutting free.
4 The TNC then orients the spindle to the position that is defined in parameter Q336.
5 If retraction is selected, the tool retracts in the programmed direction by 0.2 mm (fixed value).
6 The tool then retracts to set-up clearance at the retraction rate, and from there—if programmed—to the 2nd set-up clearance at **FMAX**. If Q214=0 the tool point remains on the wall of the hole.

Please note while programming:

Machine and TNC must be specially prepared by the machine tool builder for use of this cycle.

This cycle is effective only for machines with servo-controlled spindle.

Program a positioning block for the starting point (hole center) in the working plane with radius compensation **R0**.

The algebraic sign for the cycle parameter DEPTH determines the working direction. If you program DEPTH=0, the cycle will not be executed.

After the cycle is completed, the TNC restores the coolant and spindle conditions that were active before the cycle call.

Danger of collision!

Use the machine parameter **displayDepthErr** to define whether, if a positive depth is entered, the TNC should output an error message (on) or not (off).

Keep in mind that the TNC reverses the calculation for pre-positioning when a **positive depth is entered**. This means that the tool moves at rapid traverse in the tool axis to set-up clearance **below** the workpiece surface!

Select a disengaging direction in which the tool moves away from the edge of the hole.

Check the position of the tool tip when you program a spindle orientation to the angle that you enter in Q336 (for example, in the **Positioning with Manual Data Input** mode of operation). Set the angle so that the tool tip is parallel to a coordinate axis.

During retraction the TNC automatically takes an active rotation of the coordinate system into account.

Cycle parameters

- **Set-up clearance** Q200 (incremental): Distance between tool tip and workpiece surface. Input range 0 to 99999.9999
- **Depth** Q201 (incremental): Distance between workpiece surface and bottom of hole. Input range -99999.9999 to 99999.9999
- **Feed rate for plunging** Q206: Traversing speed of the tool during boring at mm/min. Input range 0 to 99999.999; alternatively **FAUTO**, **FU**
- **Dwell time at depth** Q211: Time in seconds that the tool remains at the hole bottom. Input range 0 to 3600.0000
- **Retraction feed rate** Q208: Traversing speed of the tool in mm/min when retracting from the hole. If you enter Q208 = 0, the tool retracts at feed rate for plunging. Input range 0 to 99999.999, alternatively **FMAX**, **FAUTO**
- **Coordinate of workpiece surface** Q203 (absolute): Coordinate of the workpiece surface. Input range -99999.9999 to 99999.9999
- **2nd set-up clearance** Q204 (incremental): Coordinate in the spindle axis at which no collision between tool and workpiece (fixtures) can occur. Input range 0 to 99999.999
- **Disengaging direction (0/1/2/3/4)** Q214: Determine the direction in which the TNC retracts the
  tool on the hole bottom (after spindle orientation)
  0: Do not retract the tool
  1: Retract the tool in minus direction of the principle axis
  2: Retract the tool in minus direction of the minor axis
  3: Retract the tool in plus direction of the principle axis
  4: Retract the tool in plus direction of the minor axis
- **Angle for spindle orientation** Q336 (absolute): Angle at which the TNC positions the tool before retracting it. Input range -360.000 to 360.000

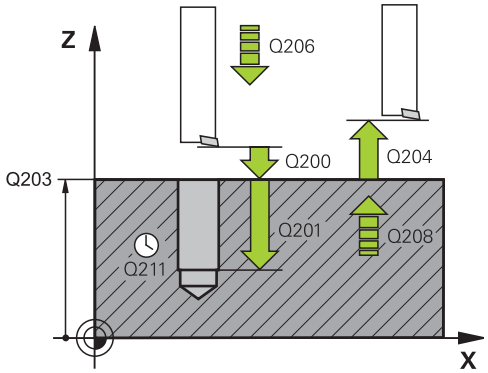

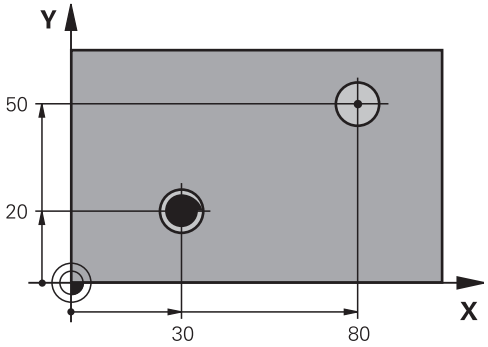

10 Z+100 R0 FMAX	
11 CYCL DEF 202 BORING	
Q200=2	;SET-UP CLEARANCE
Q201=-15	;DEPTH
Q206=100	;FEED RATE FOR PLNGNG
Q211=0.5	;DWELL TIME AT BOTTOM
Q208=250	;RETRACTION FEED RATE
Q203=+20	;SURFACE COORDINATE
Q204=100	;2ND SET-UP CLEARANCE
Q214=1	;DISENGAGING DIRECTN
Q336=0	;ANGLE OF SPINDLE
12 X+30 FMAX	
13 Y+20 FMAX M3 M99	
14 X+80 FMAX	
14 Y+50 FMAX M99	

17.6 UNIVERSAL DRILLING (Cycle 203)

Cycle run

1 The TNC positions the tool in the tool axis at rapid traverse **FMAX** to the entered set-up clearance above the workpiece surface.
2 The tool drills to the first plunging depth at the entered feed rate **F**.
3 If you have programmed chip breaking, the tool then retracts by the entered retraction value. If you are working without chip breaking, the tool retracts at the retraction feed rate to the set-up clearance, remains there—if programmed—for the entered dwell time, and advances again at **FMAX** to the set-up clearance above the first PLUNGING DEPTH.
4 The tool then advances with another infeed at the programmed feed rate. If programmed, the plunging depth is decreased after each infeed by the decrement.
5 The TNC repeats this process (2 to 4) until the programmed total hole depth is reached.
6 The tool remains at the hole bottom—if programmed—for the entered dwell time to cut free, and then retracts to set-up clearance at the retraction feed rate. If programmed, the tool moves to the 2nd set-up clearance at **FMAX**.

Please note while programming:

Program a positioning block for the starting point (hole center) in the working plane with radius compensation **R0**.

The algebraic sign for the cycle parameter DEPTH determines the working direction. If you program DEPTH=0, the cycle will not be executed.

Danger of collision!

Use the machine parameter **displayDepthErr** to define whether, if a positive depth is entered, the TNC should output an error message (on) or not (off).

Keep in mind that the TNC reverses the calculation for pre-positioning when a **positive depth is entered**. This means that the tool moves at rapid traverse in the tool axis to set-up clearance **below** the workpiece surface!

Cycle parameters

- **Set-up clearance** Q200 (incremental): Distance between tool tip and workpiece surface. Input range 0 to 99999.9999
- **Depth** Q201 (incremental): Distance between workpiece surface and bottom of hole. Input range -99999.9999 to 99999.9999
- **Feed rate for plunging** Q206: Traversing speed of the tool during drilling in mm/min. Input range 0 to 99999.999; alternatively **FAUTO**, **FU**
- **Plunging depth** Q202 (incremental): Infeed per cut. Input range 0 to 99999.9999. The depth does not have to be a multiple of the plunging depth. The TNC will go to depth in one movement if:
  - the plunging depth is equal to the depth
  - the plunging depth is greater than the depth and no chip breaking is defined
- **Dwell time at top** Q210: Time in seconds that the tool remains at set-up clearance after having been retracted from the hole for chip removal. Input range 0 to 3600.0000
- **Coordinate of workpiece surface** Q203 (absolute): Coordinate of the workpiece surface. Input range -99999.9999 to 99999.9999
- **2nd set-up clearance** Q204 (incremental): Coordinate in the spindle axis at which no collision between tool and workpiece (fixtures) can occur. Input range 0 to 99999.9999
- **Decrement** Q212 (incremental): Value by which the TNC decreases the plunging depth Q202 after each infeed. Input range 0 to 99999.9999
- **No. Breaks before retracting** Q213: Number of chip breaks after which the TNC is to withdraw the tool from the hole for chip removal. For chip breaking, the TNC retracts the tool each time by the value in Q256. Input range 0 to 99999
- **Minimum plunging depth** Q205 (incremental): If you have entered a decrement, the TNC limits the plunging depth to the value entered with Q205. Input range 0 to 99999.9999

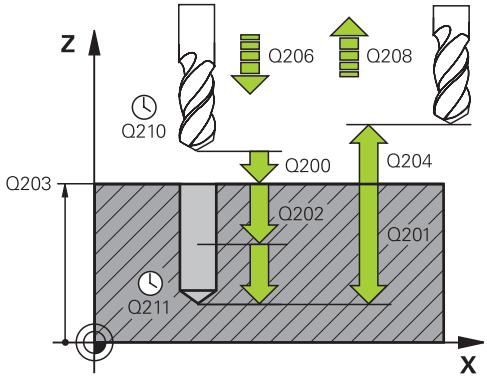

NC blocks

11 CYCL DEF 203 UNIVERSAL DRILLING	
Q200=2	;SET-UP CLEARANCE
Q201=-20	;DEPTH
Q206=150	;FEED RATE FOR PLNGNG
Q202=5	;PLUNGING DEPTH
Q211=0	;DWELL TIME AT TOP
Q203=+20	;SURFACE COORDINATE
Q204=50	;2ND SET-UP CLEARANCE
Q212=0.2	;DECREMENT
Q213=3	;CHIP BREAKING
Q205=3	;MIN. PLUNGING DEPTH
Q211=0.25	;DWELL TIME AT BOTTOM
Q208=500	;RETRACTION FEED RATE
Q256=0.2	;DIST. FOR CHIP BRKNG
Q395=0	;DEPTH REFERENCE

- **Dwell time at depth** Q211: Time in seconds that the tool remains at the hole bottom. Input range 0 to 3600.0000
- **Feed rate for retraction** Q208: Traversing speed of the tool in mm/min when retracting from the hole. If you enter Q208 = 0, the TNC retracts the tool at the feed rate Q206. Input range 0 to 99999.999, alternatively **FMAX**, **FAUTO**
- **Retraction rate for chip breaking** Q256 (incremental): Value by which the TNC retracts the tool during chip breaking. Input range 0.000 to 99999.999
- **Depth reference** Q395: Select whether the entered depth is referenced to the tool tip or the cylindrical part of the tool. If the TNC is to reference the depth to the cylindrical part of the tool, the point angle of the tool must be defined in the T ANGLE column of the tool table TOOL.T.
  0 = Depth referenced to the tool tip
  1 = Depth referenced to the cylindrical part of the tool

17.7 BACK BORING (Cycle 204)

Cycle run

This cycle allows holes to be bored from the underside of the workpiece.

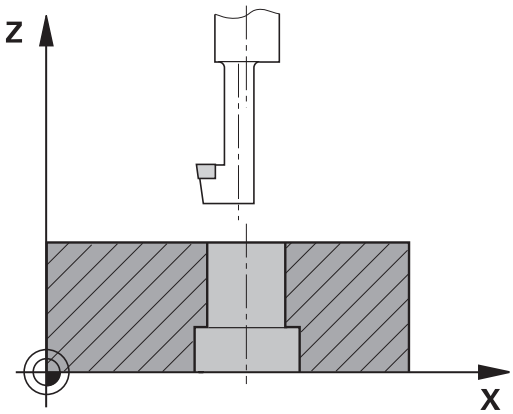

1 The TNC positions the tool in the tool axis at rapid traverse **FMAX** to set-up clearance above the workpiece surface.
2 The TNC then orients the spindle to the 0° position with an oriented spindle stop and displaces the tool by the off-center distance.
3 The tool is then plunged into the already bored hole at the feed rate for pre-positioning until the tooth has reached set-up clearance on the underside of the workpiece.
4 The TNC then centers the tool again over the bore hole, switches on the spindle and the coolant and moves at the feed rate for boring to the depth of bore.
5 If a dwell time is entered, the tool will pause at the top of the bore hole and will then be retracted from the hole again. The TNC carries out another oriented spindle stop and the tool is once again displaced by the off-center distance.
6 The tool then retracts to set-up clearance at the feed rate for pre-positioning, and from there—if programmed—to the 2nd set-up clearance at **FMAX**.

Please note while programming:

Machine and TNC must be specially prepared by the machine tool builder for use of this cycle.

This cycle is effective only for machines with servo-controlled spindle.

Special boring bars for upward cutting are required for this cycle.

Program a positioning block for the starting point (hole center) in the working plane with radius compensation **R0**.

The algebraic sign for the cycle parameter depth determines the working direction. Note: A positive sign bores in the direction of the positive spindle axis.

The entered tool length is the total length to the underside of the boring bar and not just to the tooth.

When calculating the starting point for boring, the TNC considers the tooth length of the boring bar and the thickness of the material.

Danger of collision!

Check the position of the tool tip when you program a spindle orientation to the angle that you enter in **Q336** (for example, in the **Positioning with Manual Data Input** mode of operation). Set the angle so that the tool tip is parallel to a coordinate axis. Select a disengaging direction in which the tool moves away from the edge of the hole.

Cycle parameters

- **Set-up clearance** Q200 (incremental): Distance between tool tip and workpiece surface. Input range 0 to 99999.9999
- **Depth of counterbore** Q249 (incremental): Distance between underside of workpiece and the top of the hole. A positive sign means the hole will be bored in the positive spindle axis direction. Input range -99999.9999 to 99999.9999
- **Material thickness** Q250 (incremental): Thickness of the workpiece. Input range 0.0001 to 99999.9999
- **Off-center distance** Q251 (incremental): Off-center distance for the boring bar; value from tool data sheet. Input range 0.0001 to 99999.9999
- **Tool edge height** Q252 (incremental): Distance between the underside of the boring bar and the main cutting tooth; value from tool data sheet. Input range 0.0001 to 99999.9999
- **Feed rate for pre-positioning** Q253: Traversing speed of the tool in mm/min when plunging into the workpiece, or when retracting from the workpiece. Input range 0 to 99999.999; alternatively **FMAX**, **FAUTO**
- **Feed rate for back boring** Q254: Traversing speed of the tool during back boring in mm/min. Input range 0 to 99999.999; alternatively **FAUTO**, **FU**
- **Dwell time** Q255: Dwell time in seconds at the top of the bore hole. Input range 0 to 3600.000
- **Coordinate of workpiece surface** Q203 (absolute): Coordinate of the workpiece surface. Input range -99999.9999 to 99999.9999
- **2nd set-up clearance** Q204 (incremental): Coordinate in the spindle axis at which no collision between tool and workpiece (fixtures) can occur. Input range 0 to 99999.9999
- **Disengaging direction (1/2/3/4)** Q214: Determine the direction in which the TNC displaces the tool by the off-center distance (after spindle orientation); programming 0 is not allowed
  1: Retract the tool in minus direction of the principle axis
  2: Retract the tool in minus direction of the minor axis
  3: Retract the tool in plus direction of the principle axis
  4: Retract the tool in plus direction of the minor axis
- **Angle for spindle orientation** Q336 (absolute): Angle at which the TNC positions the tool before it is plunged into or retracted from the bore hole. Input range -360.0000 to 360.0000

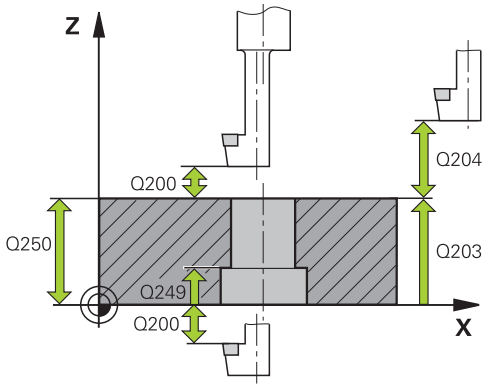

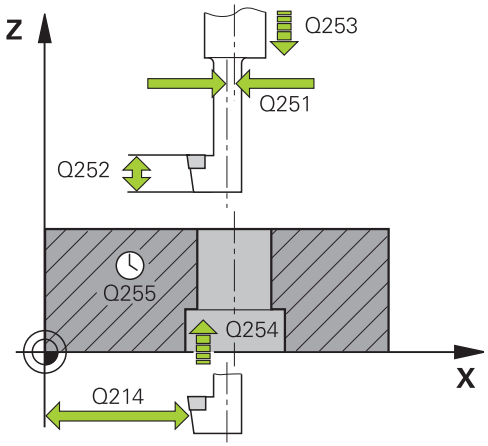

NC blocks

11 CYCL DEF 204 BACK BORING	
Q200=2	;SET-UP CLEARANCE
Q249=+5	;DEPTH OF COUNTERBORE
Q250=20	;MATERIAL THICKNESS
Q251=3.5	;OFF-CENTER DISTANCE
Q252=15	;TOOL EDGE HEIGHT
Q253=750	;F PRE-POSITIONING
Q254=200	;F COUNTERBORING
Q255=0	;DWELL TIME
Q203=+20	;SURFACE COORDINATE
Q204=50	;2ND SET-UP CLEARANCE
Q214=1	;DISENGAGING DIRECTN
Q336=0	;ANGLE OF SPINDLE

17.8 UNIVERSAL PECKING (Cycle 205)

Cycle run

1 The TNC positions the tool in the tool axis at rapid traverse **FMAX** to the entered set-up clearance above the workpiece surface.
2 If you enter a deepened starting point, the TNC move at the defined positioning feed rate to the set-up clearance above the deepened starting point.
3 The tool drills to the first plunging depth at the entered feed rate **F**.
4 If you have programmed chip breaking, the tool then retracts by the entered retraction value. If you are working without chip breaking, the tool is moved at rapid traverse to the set-up clearance, and then at **FMAX** to the entered starting position above the first plunging depth.
5 The tool then advances with another infeed at the programmed feed rate. If programmed, the plunging depth is decreased after each infeed by the decrement.
6 The TNC repeats this process (2 to 4) until the programmed total hole depth is reached.
7 The tool remains at the hole bottom—if programmed—for the entered dwell time to cut free, and then retracts to set-up clearance at the retraction feed rate. If programmed, the tool moves to the 2nd set-up clearance at **FMAX**.

Please note while programming:

Program a positioning block for the starting point (hole center) in the working plane with radius compensation **R0**.

The algebraic sign for the cycle parameter DEPTH determines the working direction. If you program DEPTH=0, the cycle will not be executed.

If you enter different advance stop distances for **Q258** and **Q259**, the TNC will change the advance stop distances between the first and last plunging depths at the same rate.

If you use **Q379** to enter a deepened starting point, the TNC merely changes the starting point of the infeed movement. Retraction movements are not changed by the TNC, therefore they are calculated with respect to the coordinate of the workpiece surface.

Danger of collision!

Use the machine parameter **displayDepthErr** to define whether, if a positive depth is entered, the TNC should output an error message (on) or not (off).

Keep in mind that the TNC reverses the calculation for pre-positioning when a **positive depth is entered**. This means that the tool moves at rapid traverse in the tool axis to set-up clearance **below** the workpiece surface!

Cycle parameters

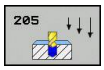

- **Set-up clearance** Q200 (incremental): Distance between tool tip and workpiece surface. Input range 0 to 99999.9999
- **Depth** Q201 (incremental): Distance between workpiece surface and bottom of hole (tip of drill taper). Input range -99999.9999 to 99999.9999
- **Feed rate for plunging** Q206: Traversing speed of the tool during drilling in mm/min. Input range 0 to 99999.999; alternatively **FAUTO**, **FU**
- **Plunging depth** Q202 (incremental): Infeed per cut. Input range 0 to 99999.9999. The depth does not have to be a multiple of the plunging depth. The TNC will go to depth in one movement if:
  - the plunging depth is equal to the depth
  - the plunging depth is greater than the depth
- **Coordinate of workpiece surface** Q203 (absolute): Coordinate of the workpiece surface. Input range -99999.9999 to 99999.9999
- **2nd set-up clearance** Q204 (incremental): Coordinate in the spindle axis at which no collision between tool and workpiece (fixtures) can occur. Input range 0 to 99999.9999
- **Decrement** Q212 (incremental): Value by which the TNC decreases the plunging depth Q202. Input range 0 to 99999.9999
- **Minimum plunging depth** Q205 (incremental): If you have entered a decrement, the TNC limits the plunging depth to the value entered with Q205. Input range 0 to 99999.9999
- **Upper advanced stop distance** Q258 (incremental): Set-up clearance for rapid traverse positioning when the TNC moves the tool again to the current plunging depth after retraction from the hole; value for the first plunging depth. Input range 0 to 99999.9999
- **Lower advanced stop distance** Q259 (incremental): Set-up clearance for rapid traverse positioning when the TNC moves the tool again to the current plunging depth after retraction from the hole; value for the last plunging depth. Input range 0 to 99999.9999
- **Infeed depth for chip breaking** Q257 (incremental): Depth at which the TNC carries out chip breaking. No chip breaking if 0 is entered. Input range 0 to 99999.9999
- **Retraction rate for chip breaking** Q256 (incremental): Value by which the TNC retracts the tool during chip breaking. Input range 0.000 to 99999.999
- **Dwell time at depth** Q211: Time in seconds that the tool remains at the hole bottom. Input range 0 to 3600.0000

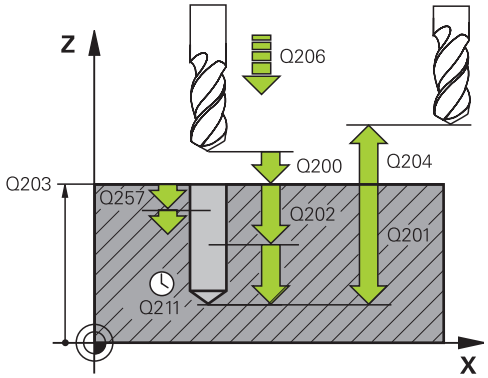

NC blocks

11 CYCL DEF 205 UNIVERSAL PECKING	
Q200=2	;SET-UP CLEARANCE
Q201=-80	;DEPTH
Q206=150	;FEED RATE FOR PLNGNG
Q202=15	;PLUNGING DEPTH
Q203=+100	;SURFACE COORDINATE
Q204=50	;2ND SET-UP CLEARANCE
Q212=0.5	;DECREMENT
Q205=3	;MIN. PLUNGING DEPTH
Q258=0.5	;UPPER ADV. STOP DIST.
Q259=1	;LOWER ADV. STOP DIST.
Q257=5	;DEPTH FOR CHIP BRKNG
Q256=0.2	;DIST. FOR CHIP BRKNG
Q211=0.25	;DWELL TIME AT BOTTOM
Q379=7.5	;START POINT
Q253=750	;F PRE-POSITIONING
Q208=9999	;RETRACTION FEED RATE
Q395=0	;DEPTH REFERENCE

- **Deepened starting point** Q379 (incremental with respect to the workpiece surface): Starting position for actual drilling operation. The TNC moves at the **feed rate for pre-positioning** from the set-up clearance above the workpiece surface to the set-up clearance above the deepened starting point. Input range 0 to 99999.9999
- **Feed rate for pre-positioning** Q253: Defines the traversing speed of the tool when returning to the plunging depth after having retracted for chip breaking (Q256). This feed rate is also effective when the tool is positioned to a deepened starting point (Q379 not equal to 0). Entry in mm/min. Input range 0 to 99999.9999 alternatively **FMAX**, **FAUTO**
- **Feed rate for retraction** Q208: Traversing speed of the tool in mm/min when retracting after the machining operation. If you enter Q208 = 0, the TNC retracts the tool at the feed rate Q206. Input range 0 to 99999.9999, alternatively **FMAX,FAUTO**
- **Depth reference** Q395: Select whether the entered depth is referenced to the tool tip or the cylindrical part of the tool. If the TNC is to reference the depth to the cylindrical part of the tool, the point angle of the tool must be defined in the T ANGLE column of the tool table TOOL.T.
  0 = Depth referenced to the tool tip
  1 = Depth referenced to the cylindrical part of the tool

17.9 SINGLE-LIP DEEP-HOLE DRILLING (Cycle 241)

Cycle run

1 The TNC positions the tool in the tool axis at rapid traverse **FMAX** to the entered set-up clearance above the workpiece surface.
2 Then the TNC moves the tool at the defined positioning feed rate to the set-up clearance above the deepened starting point and activates the drilling speed (**M3**) and the coolant. The TNC executes the approach motion with the direction of rotation defined in the cycle, with clockwise, counterclockwise or stationary spindle.
3 The tool drills to the hole depth at the feed rate **F**, or to the plunging depth if a smaller infeed value has been entered. The plunging depth is decreased after each infeed by the decrement. If you have entered a dwell depth, the TNC reduces the feed rate by the feed rate factor after the dwell depth has been reached.
4 If programmed, the tool remains at the hole bottom for chip breaking.
5 The TNC repeats this process (3 to 4) until the programmed total hole depth is reached.
6 After the TNC has reached the hole depth, the TNC switches off the coolant and resets the drilling speed to the value defined for retraction.
7 The tool is retracted to the set-up clearance at the retraction feed rate. If programmed, the tool moves to the 2nd set-up clearance at **FMAX**.

Please note while programming:

Program a positioning block for the starting point (hole center) in the working plane with radius compensation **R0**.

The algebraic sign for the cycle parameter DEPTH determines the working direction. If you program DEPTH=0, the cycle will not be executed.

Danger of collision!

Use the machine parameter **displayDepthErr** to define whether, if a positive depth is entered, the TNC should output an error message (on) or not (off).

Keep in mind that the TNC reverses the calculation for pre-positioning when a **positive depth is entered**. This means that the tool moves at rapid traverse in the tool axis to set-up clearance **below** the workpiece surface!

Cycle parameters

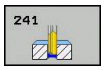

- **Set-up clearance** Q200 (incremental): Distance between tool tip and workpiece surface. Input range 0 to 99999.9999
- **Depth** Q201 (incremental): Distance between workpiece surface and bottom of hole. Input range -99999.9999 to 99999.9999
- **Feed rate for plunging** Q206: Traversing speed of the tool during drilling in mm/min. Input range 0 to 99999.999; alternatively **FAUTO**, **FU**
- **Dwell time at depth** Q211: Time in seconds that the tool remains at the hole bottom. Input range 0 to 3600.0000
- **Coordinate of workpiece surface** Q203 (absolute): Coordinate of the workpiece surface. Input range -99999.9999 to 99999.9999
- **2nd set-up clearance** Q204 (incremental): Coordinate in the spindle axis at which no collision between tool and workpiece (fixtures) can occur. Input range 0 to 99999.9999
- **Deepened starting point** Q379 (incremental with respect to the workpiece surface): Starting position for actual drilling operation. The TNC moves at the **feed rate for pre-positioning** from the set-up clearance above the workpiece surface to the set-up clearance above the deepened starting point. Input range 0 to 99999.9999
- **Feed rate for pre-positioning** Q253: Defines the traversing speed of the tool when returning to the plunging depth after having retracted for chip breaking (Q256). This feed rate is also effective when the tool is positioned to a deepened starting point (Q379 not equal to 0). Entry in mm/min. Input range 0 to 99999.9999 alternatively **FMAX**, **FAUTO**
- **Retraction feed rate** Q208: Traversing speed of the tool in mm/min when retracting from the hole. If you enter Q208 = 0, the TNC retracts the tool at the feed rate in Q206. Input range 0 to 99999.999, alternatively **FMAX**, **FAUTO**
- **Rotat. dir. of entry/exit (3/4/5)** Q426: Desired direction of spindle rotation when tool moves into and retracts from the hole. Input:
  3: Turn the spindle with M3
  4: Turn the spindle with M4
  5: Move with stationary spindle
- **Spindle speed of entry/exit** Q427: Desired spindle speed when tool moves into and retracts from the hole. Input range 0 to 99999
- **Drilling speed** Q428: Desired speed for drilling. Input range 0 to 99999

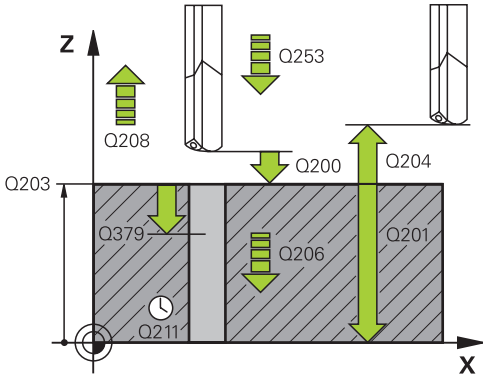

NC blocks

```
11 CYCL DEF 241 SINGLE-LIP
   D.H.DRLNG
   Q200=2      ;SET-UP CLEARANCE
   Q201=-80    ;DEPTH
   Q206=150    ;FEED RATE FOR
               PLNGNG
   Q211=0.25   ;DWELL TIME AT
               BOTTOM
   Q203=+100;SURFACE COORDINATE
   Q204=50     ;2ND SET-UP
               CLEARANCE
   Q379=7.5    ;START POINT
   Q253=750    ;F PRE-POSITIONING
   Q208=1000;RETRACTION FEED
               RATE
   Q426=3      ;DIR. OF SPINDLE ROT.
   Q427=25     ;ROT. SPEED INFEED/
               OUT
   Q428=500    ;DRILLING SPEED
   Q429=8      ;COOLANT ON
   Q430=9      ;COOLANT OFF
   Q435=0      ;DWELL DEPTH
   Q401=100    ;FEED RATE FACTOR
   Q202=9999;MAX. PLUNGING
               DEPTH PLUNGING
               DEPTH
   Q212=0      ;DECREMENT
   Q205=0      ;MIN. PLUNGING DEPTH
               PLUNGING DEPTH
```

- **M function for coolant on?** Q429: M function for switching on the coolant. The TNC switches the coolant on if the tool is in the hole at the deepened starting point. Input range 0 to 999
- **M function for coolant off?** Q430: M function for switching off the coolant. The TNC switches the coolant off if the tool is at the hole depth. Input range 0 to 999
- **Dwell depth** Q435 (incremental): Coordinate in the spindle axis at which the tool is to dwell. If 0 is entered, the function is not active (standard setting). Application: During machining of through-holes some tools require a short dwell time before exiting the bottom of the hole in order to transport the chips to the top. Define a value smaller than the hole depth Q201; input range 0 to 99999.9999.
- **Feed rate factor** Q401: Factor by which the TNC reduces the feed rate after the dwell depth has been reached. Input range 0 to 100
- **Plunging depth** Q202 (incremental): Infeed per cut. The depth does not have to be a multiple of the plunging depth. Input range 0 to 99999.9999
- **Decrement** Q212 (incremental): Value by which the TNC decreases the plunging depth Q202 after each infeed. Input range 0 to 99999.9999
- **Minimum plunging depth** Q205 (incremental): If you have entered a decrement, the TNC limits the plunging depth to the value entered with Q205. Input range 0 to 99999.9999

17.10 Programming Examples

Example: Drilling cycles

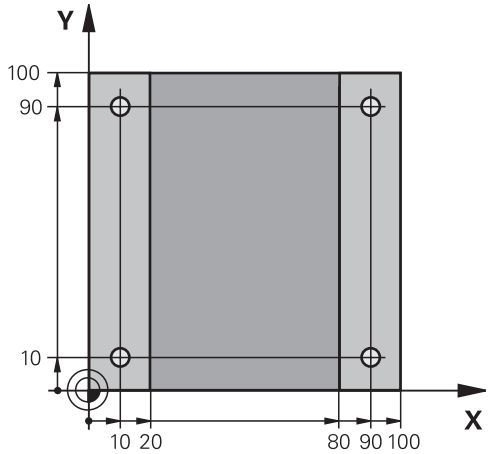

0 BEGIN PGM C200 MM		
1 BLK FORM 0.1 Z X+0 Y+0 Z-20		Definition of workpiece blank
2 BLK FORM 0.2 X+100 Y+100 Z+0		
3 TOOL CALL 1 Z S4500		Tool call (tool radius 3)
4 Z+250 R0 FMAX		Retract the tool
5 CYCL DEF 200 DRILLING		Cycle definition
Q200=2	;SET-UP CLEARANCE	
Q201=-15	;DEPTH	
Q206=250	;FEED RATE FOR PLNGNG	
Q202=5	;PLUNGING DEPTH	
Q210=0	;DWELL TIME AT TOP	
Q203=-10	;SURFACE COORDINATE	
Q204=20	;2ND SET-UP CLEARANCE	
Q211=0.2	;DWELL TIME AT BOTTOM	
Q395=0	;DEPTH REFERENCE	
6 X+10 R0 FMAX M3		Approach hole 1, spindle ON
7 Y+10 R0 FMAX M99		Approach hole 1, call cycle
8 X+90 R0 FMAX M99		Approach hole 2, call cycle
9 Y+90 R0 FMAX M99		Approach hole 3, call cycle
10 X+10 R0 FMAX M99		Approach hole 4, call cycle
11 Z+250 R0 FMAX M2		Retract the tool, end program
12 END PGM C200 MM		

Example: Using drilling cycles in connection with PATTERN DEF

The drill hole coordinates are stored in the pattern definition PATTERN DEF POS and are called by the TNC with CYCL CALL PAT.

The tool radii are selected so that all work steps can be seen in the test graphics.

Program sequence

- Centering (tool radius 4)
- Drilling (tool radius 2.4)
- Tapping (tool radius 3)

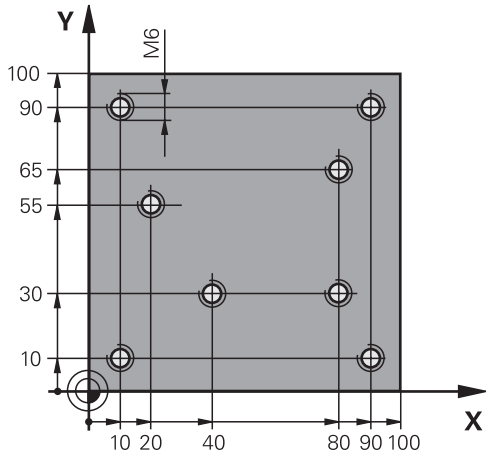

0 BEGIN PGM 1 MM	
1 BLK FORM 0.1 Z X+0 Y+0 Z-20	Definition of workpiece blank
2 BLK FORM 0.2 X+100 Y+100 Y+0	
3 TOOL CALL 1 Z S5000	Call the centering tool (tool radius 4)
4 Z+10 R0 F5000	Move tool to clearance height (enter a value for F): the TNC positions to the clearance height after every cycle
5 PATTERN DEF	Define all drilling positions in the point pattern
POS1(X+10 Y+10 Z+0)	
POS2(X+40 Y+30 Z+0)	
POS3(X+20 Y+55 Z+0)	
POS4(X+10 Y+90 Z+0)	
POS5(X+90 Y+90 Z+0)	
POS6(X+80 Y+65 Z+0)	
POS7(X+80 Y+30 Z+0)	
POS8(X+90 Y+10 Z+0)	
6 CYCL DEF 240 CENTERING	Cycle definition: CENTERING
Q200=2 ;SET-UP CLEARANCE	
Q343=0 ;SELECT DEPTH/DIA.	
Q201=-2 ;DEPTH	
Q344=-10 ;DIAMETER	
Q206=150 ;FEED RATE FOR PLNGNG	
Q211=0 ;DWELL TIME AT BOTTOM	
Q203=+0 ;SURFACE COORDINATE	
Q204=50 ;2ND SET-UP CLEARANCE	
7 CYCL CALL PAT F5000 M13	Call the cycle in connection with the hole pattern
8 Z+100 R0 FMAX	Retract the tool, change the tool
9 TOOL CALL 2 Z S5000	Call the drilling tool (radius 2.4)
10 Z+10 R0 F5000	Move tool to clearance height (enter a value for F)

11 CYCL DEF 200 DRILLING	Cycle definition: drilling
Q200=2 ;SET-UP CLEARANCE	
Q201=-25 ;DEPTH	
Q206=150 ;FEED RATE FOR PLNGNG	
Q202=5 ;PLUNGING DEPTH	
Q211=0 ;DWELL TIME AT TOP	
Q203=+0 ;SURFACE COORDINATE	
Q204=50 ;2ND SET-UP CLEARANCE	
Q211=0.2 ;DWELL TIME AT BOTTOM	
Q395=0 ;DEPTH REFERENCE	
12 CYCL CALL PAT F5000 M13	Call the cycle in connection with the hole pattern
13 Z+100 R0 FMAX	Retract the tool
14 TOOL CALL 3 Z S200	Call the tapping tool (radius 3)
15 Z+50 R0 FMAX	Move tool to clearance height
16 CYCL DEF 206 TAPPING NEW	Cycle definition for tapping
Q200=2 ;SET-UP CLEARANCE	
Q201=-25 ;THREAD DEPTH	
Q206=150 ;FEED RATE FOR PLNGNG	
Q211=0 ;DWELL TIME AT BOTTOM	
Q203=+0 ;SURFACE COORDINATE	
Q204=50 ;2ND SET-UP CLEARANCE	
17 CYCL CALL PAT F5000 M13	Call the cycle in connection with the hole pattern
18 Z+100 R0 FMAX M2	Retract the tool, end program
19 END PGM 1 MM	

17.11 TAPPING with a floating tap holder (Cycle 206)

Cycle run

1 The TNC positions the tool in the tool axis at rapid traverse **FMAX** to the entered set-up clearance above the workpiece surface.
2 The tool drills to the total hole depth in one movement.
3 Once the tool has reached the total hole depth, the direction of spindle rotation is reversed and the tool is retracted to the set-up clearance at the end of the dwell time. If programmed, the tool moves to the 2nd set-up clearance at **FMAX**.
4 At the set-up clearance, the direction of spindle rotation reverses once again.

Please note while programming:

Program a positioning block for the starting point (hole center) in the working plane with radius compensation **R0**.

The algebraic sign for the cycle parameter DEPTH determines the working direction. If you program DEPTH=0, the cycle will not be executed.

A floating tap holder is required for tapping. It must compensate the tolerances between feed rate and spindle speed during the tapping process.

When a cycle is being run, the spindle speed override knob is disabled. The feed-rate override knob is active only within a limited range, which is defined by the machine tool builder (refer to your machine manual).

For tapping right-hand threads activate the spindle with **M3**, for left-hand threads use **M4**.

If you enter the thread pitch of the tap in the **Pitch** column of the tool table, the TNC compares the thread pitch from the tool table with the thread pitch defined in the cycle. The TNC displays an error message if the values do not match. In Cycle 206 the TNC uses the programmed rotational speed and the feed rate defined in the cycle to calculate the thread pitch.

Danger of collision!

Use the machine parameter **displayDepthErr** to define whether, if a positive depth is entered, the TNC should output an error message (on) or not (off).

Keep in mind that the TNC reverses the calculation for pre-positioning when a **positive depth is entered**. This means that the tool moves at rapid traverse in the tool axis to set-up clearance **below** the workpiece surface!

Cycle parameters

- **Set-up clearance** Q200 (incremental): Distance between tool tip and workpiece surface. Input range 0 to 99999.9999

Guide value: 4x pitch.

- **Thread depth** Q201 (incremental): Distance between workpiece surface and root of thread. Input range -99999.9999 to 99999.9999
- **Feed rate F** Q206: Traversing speed of the tool during tapping. Input range 0 to 99999.999 alternatively **FAUTO**
- **Dwell time at bottom** Q211: Enter a value between 0 and 0.5 seconds to avoid wedging of the tool during retraction. Input range 0 to 3600.0000
- **Coordinate of workpiece surface** Q203 (absolute): Coordinate of the workpiece surface. Input range -99999.9999 to 99999.9999
- **2nd set-up clearance** Q204 (incremental): Coordinate in the spindle axis at which no collision between tool and workpiece (fixtures) can occur. Input range 0 to 99999.9999

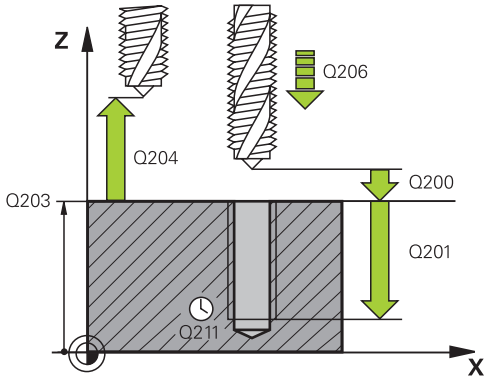

NC blocks

25 CYCL DEF 206 TAPPING NEW	
Q200=2	;SET-UP CLEARANCE
Q201=-20	;THREAD DEPTH
Q206=150	;FEED RATE FOR PLNGNG
Q211=0.25	;DWELL TIME AT BOTTOM
Q203=+25	;SURFACE COORDINATE
Q204=50	;2ND SET-UP CLEARANCE

The feed rate is calculated as follows: F = S x p

F: Feed rate (mm/min)
S: Spindle speed (rpm)
p: Thread pitch (mm)

Retracting after a program interruption

If you interrupt program run during tapping with the machine stop button, the TNC will display a soft key with which you can retract the tool.

17.12 RIGID TAPPING without a floating tap holder (Cycle 207)

Cycle run

The TNC cuts the thread without a floating tap holder in one or more passes.

1 The TNC positions the tool in the tool axis at rapid traverse **FMAX** to the entered set-up clearance above the workpiece surface.
2 The tool drills to the total hole depth in one movement.
3 Once the tool has reached the total hole depth, the direction of spindle rotation is reversed and the tool is retracted to the set-up clearance at the end of the dwell time. If programmed, the tool moves to the 2nd set-up clearance at **FMAX**.
4 The TNC stops the spindle turning at set-up clearance.

Please note while programming:

Machine and TNC must be specially prepared by the machine tool builder for use of this cycle.

This cycle is effective only for machines with servo-controlled spindle.

Program a positioning block for the starting point (hole center) in the working plane with radius compensation **R0**.

The algebraic sign for the cycle parameter DEPTH determines the working direction. If you program DEPTH=0, the cycle will not be executed.

The TNC calculates the feed rate from the spindle speed. If the feed-rate override is used during tapping, the TNC automatically adjusts the feed rate.

The feed-rate override knob is disabled.

At the end of the cycle the spindle comes to a stop. Before the next operation, restart the spindle with **M3** (or **M4**).

If you enter the thread pitch of the tap in the **Pitch** column of the tool table, the TNC compares the thread pitch from the tool table with the thread pitch defined in the cycle. The TNC displays an error message if the values do not match.

Danger of collision!

Use the machine parameter **displayDepthErr** to define whether, if a positive depth is entered, the TNC should output an error message (on) or not (off).

Keep in mind that the TNC reverses the calculation for pre-positioning when a **positive depth is entered**. This means that the tool moves at rapid traverse in the tool axis to set-up clearance **below** the workpiece surface!

Cycle parameters

- **Set-up clearance** Q200 (incremental): Distance between tool tip and workpiece surface. Input range 0 to 99999.9999
- **Thread depth** Q201 (incremental): Distance between workpiece surface and root of thread. Input range -99999.9999 to 99999.9999
- **Thread pitch** Q239: Pitch of the thread. The algebraic sign differentiates between right-hand and left-hand threads:
  + = right-hand thread
  –= left-hand thread
  Input range -99.9999 to 99.9999
- **Coordinate of workpiece surface** Q203 (absolute): Coordinate of the workpiece surface. Input range -99999.9999 to 99999.9999
- **2nd set-up clearance** Q204 (incremental): Coordinate in the spindle axis at which no collision between tool and workpiece (fixtures) can occur. Input range 0 to 99999.9999

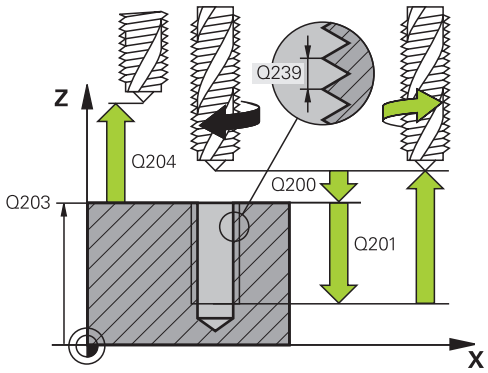

NC blocks

26 CYCL DEF 207 RIGID TAPPING NEW	
Q200=2	;SET-UP CLEARANCE
Q201=-20	;THREAD DEPTH
Q239=+1	;THREAD PITCH
Q203=+25	;SURFACE COORDINATE
Q204=50	;2ND SET-UP CLEARANCE

Retracting after a program interruption

Retracting in the Manual Operation mode

You can interrupt the thread cutting process by pressing the NC Stop key. A soft key for retracting the tool from the thread is displayed in the soft-key row below the screen. When you press this soft key and the NC Start key, the tool retracts from the hole and returns to the starting point of machining. The spindle is stopped automatically and the TNC displays a message.

Retracting in the Program Run, Single Block or Full Sequence mode

You can interrupt the thread cutting process by pressing the NC Stop key and then INTERNAL STOP. The TNC displays the **MANUAL OPERATION** soft key. After pressing **MANUAL OPERATION**, you can retract the tool in the active spindle axis. To resume machining after the interruption, press the **RESTORE POSITION** soft key and NC Start. The TNC moves the tool back to the starting position.

When retracting the tool you can move it in the positive and negative tool axis directions. Please keep this in mind during retraction—danger of collision!

17.13 Programming Examples

Example: Thread milling

The drill hole coordinates are stored in the point table TAB1.PNT and are called by the TNC with **CYCL CALL PAT**.

The tool radii are selected so that all work steps can be seen in the test graphics.

Program sequence

- Centering
- Drilling
- Tapping

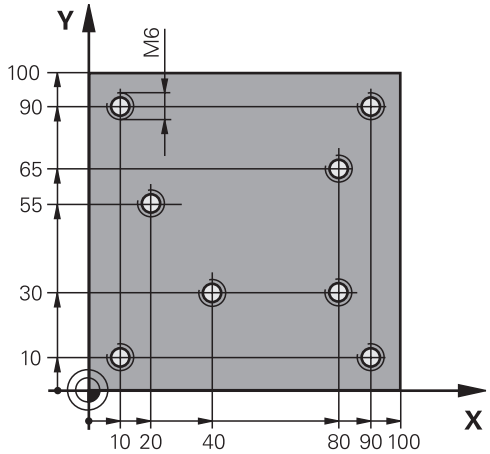

0 BEGIN PGM 1 MM	
1 BLK FORM 0.1 Z X+0 Y+0 Z-20	Definition of workpiece blank
2 BLK FORM 0.2 X+100 Y+100 Y+0	
3 TOOL CALL 1 Z S5000	Call tool: centering drill
4 Z+10 R0 F5000	Move tool to clearance height (enter a value for F): the TNC positions to the clearance height after every cycle
5 SEL PATTERN "TAB1"	Definition of point table
6 CYCL DEF 240 CENTERING	Cycle definition: CENTERING
Q200=2 ;SET-UP CLEARANCE	
Q343=1 ;SELECT DIA./DEPTH	
Q201=-3.5 ;DEPTH	
Q344=-7 ;DIAMETER	
Q206=150 ;FEED RATE FOR PLNGNG	
Q11=0 ;DWELL TIME AT DEPTH	
Q203=+0 ;SURFACE COORDINATE	0 must be entered here, effective as defined in point table
Q204=0 ;2ND SET-UP CLEARANCE	0 must be entered here, effective as defined in point table
10 CYCL CALL PAT F5000 M3	Cycle call in connection with point table TAB1.PNT, feed rate between the points: 5000 mm/min
11 Z+100 R0 FMAX M6	Retract the tool, change the tool
12 TOOL CALL 2 Z S5000	Call tool: drill
13 Z+10 R0 F5000	Move tool to clearance height (enter a value for F)
14 CYCL DEF 200 DRILLING	Cycle definition: drilling
Q200=2 ;SET-UP CLEARANCE	
Q201=-25 ;DEPTH	
Q206=150 ;FEED RATE FOR PLNGNG	
Q202=5 ;PLUNGING DEPTH	
Q210=0 ;DWELL TIME AT TOP	
Q203=+0 ;SURFACE COORDINATE	0 must be entered here, effective as defined in point table

Q204=0 ;2ND SET-UP CLEARANCE	0 must be entered here, effective as defined in point table
Q211=0.2 ;DWELL TIME AT DEPTH	
Q395=0 ;DEPTH REFERENCE	
15 CYCL CALL PAT F5000 M3	Cycle call in connection with point table TAB1.PNT
16 Z+100 R0 FMAX M6	Retract the tool, change the tool
17 TOOL CALL 3 Z S200	Call tool: tap
18 Z+50 R0 FMAX	Move tool to clearance height
19 CYCL DEF 206 TAPPING	Cycle definition for tapping
Q200=2 ;SET-UP CLEARANCE	
Q201=-25 ;DEPTH OF THREAD	
Q206=150 ;FEED RATE FOR PLNGNG	
Q211=0 ;DWELL TIME AT DEPTH	
Q203=+0 ;SURFACE COORDINATE	0 must be entered here, effective as defined in point table
Q204=0 ;2ND SET-UP CLEARANCE	0 must be entered here, effective as defined in point table
20 CYCL CALL PAT F5000 M3	Cycle call in connection with point table TAB1.PNT
21 Z+100 R0 FMAX M2	Retract the tool, end program
22 END PGM 1 MM	

Point table TAB1.PNT

TAB1. PNT MM
NR X Y Z
0 +10 +10 +0
1 +40 +30 +0
2 +90 +10 +0
3 +80 +30 +0
4 +80 +65 +0
5 +90 +90 +0
6 +10 +90 +0
7 +20 +55 +0
[END]

18

Fixed Cycles: Pocket Milling / Stud Milling / Slot Milling

18.1 Fundamentals

Overview

The TNC offers the following cycles for machining pockets, studs and slots:

Cycle	Soft key	Page
251 RECTANGULAR POCKET Roughing/finishing cycle with selection of machining operation		447
253 SLOT MILLING Roughing/finishing cycle with selection of machining operation		451
256 RECTANGULAR STUD Roughing/finishing cycle with stepover, if multiple passes are required		455
233 FACE MILLING Machining the face with up to 3 limits	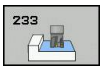	459

18.2 RECTANGULAR POCKET (Cycle 251)

Cycle run

Use Cycle 251 RECTANGULAR POCKET to completely machine rectangular pockets. Depending on the cycle parameters, the following machining alternatives are available:

- Complete machining: Roughing, floor finishing, side finishing
- Only roughing
- Only floor finishing and side finishing
- Only floor finishing
- Only side finishing

Roughing

1. The tool plunges the workpiece at the pocket center and advances to the first plunging depth.
2. The TNC roughs out the pocket from the inside out, taking the overlap factor (parameter Q370) and the finishing allowance (parameters Q368 and Q369) into account.
3. At the end of the roughing operation, the TNC moves the tool away from the pocket wall, then moves by the set-up clearance above the current plunging depth and returns from there at rapid traverse to the pocket center.
4. This process is repeated until the programmed pocket depth is reached.

Finishing

5. If finishing allowances are defined, the tool plunges the workpiece at the pocket center and moves to the plunging depth for finishing. The TNC first finishes the pocket walls, in multiple infeeds if so specified.
6. Then the TNC finishes the floor of the pocket from the inside out.

Please note while programming:

Pre-position the tool in the machining plane to the starting position with radius compensation **R0**. Note parameter Q367 (position).

The TNC automatically pre-positions the tool in the tool axis. Note the **2nd** set-up clearance Q204.

The algebraic sign for the cycle parameter DEPTH determines the working direction. If you program DEPTH=0, the cycle will not be executed.

At the end of the cycle, the TNC returns the tool to the starting position.

At the end of a roughing operation, the TNC positions the tool back to the pocket center at rapid traverse. The tool is above the current pecking depth by the set-up clearance. Enter the set-up clearance so that the tool cannot jam because of chips.

At the end, the TNC positions the tool back to the set-up clearance, or to the 2nd set-up clearance if one was programmed.

Danger of collision!

Use the machine parameter **displayDepthErr** to define whether, if a positive depth is entered, the TNC should output an error message (on) or not (off).

Keep in mind that the TNC reverses the calculation for pre-positioning when a **positive depth is entered**. This means that the tool moves at rapid traverse in the tool axis to set-up clearance **below** the workpiece surface!

Cycle parameters

- **Machining operation (0/1/2)** Q215: Define machining operation:
  0: Roughing and finishing
  1: Only roughing
  2: Only finishing
  Side finishing and floor finishing are only machined when the specific allowance (Q368, Q369) is defined
- **1st side length** Q218 (incremental): Pocket length, parallel to the reference axis of the working plane. Input range 0 to 99999.9999
- **2nd side length** Q219 (incremental): Pocket length, parallel to the minor axis of the working plane. Input range 0 to 99999.9999
- **Depth** Q201 (incremental): Distance between workpiece surface and bottom of pocket. Input range -99999.9999 to 99999.9999
- **Pocket position** Q367: Position of the pocket in reference to the position of the tool when the cycle is called:
  0: Tool position = pocket center
  1: Tool position = left corner below
  2: Tool position = right corner below
  3: Tool position = right corner top
  4: Tool position = left top corner top
- **Plunging depth** Q202 (incremental): Infeed per cut. Enter a value greater than 0. Input range 0 to 99999.9999
- **Feed rate for milling** Q207: Traversing speed of the tool in mm/min while milling. Input range 0 to 99999.999 alternatively **FAUTO**, **FU**, **FZ**
- **Feed rate for plunging** Q206: Traversing speed of the tool while moving to depth in mm/min. Input range 0 to 99999.999; alternatively **FAUTO**, **FU**, **FZ**
- **Feed rate for finishing** Q385: Traversing speed of the tool during side and floor finishing in mm/min. Input range 0 to 99999.999; alternatively **FAUTO**, **FU**, **FZ**
- **Finishing allowance for side** Q368 (incremental): Finishing allowance in the working plane. Input range 0 to 99999.9999
- **Finishing allowance for floor** Q369 (incremental value): Finishing allowance in the tool axis. Input range 0 to 99999.9999
- **Infeed for finishing** Q338 (incremental): Infeed per cut. Q338=0: Finishing in one infeed. Input range 0 to 99999.9999
- **Set-up clearance** Q200 (incremental): Distance between tool tip and workpiece surface. Input range 0 to 99999.9999;
- **Coordinate of workpiece surface** Q203 (absolute): Coordinate of the workpiece surface. Input range -99999.9999 to 99999.9999

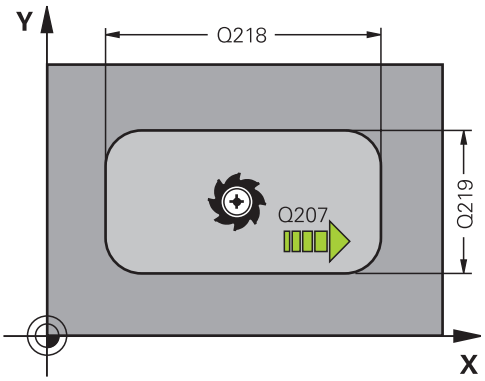

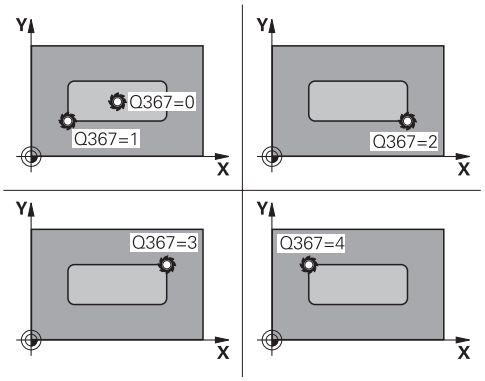

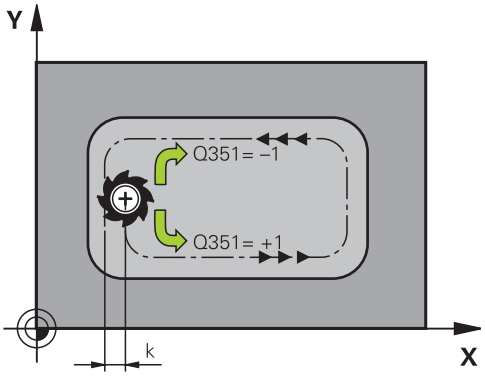

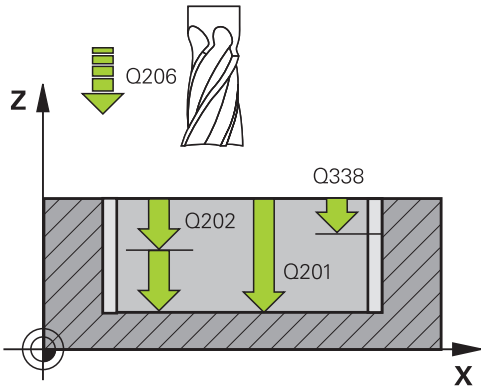

- **2nd set-up clearance** Q204 (incremental): Coordinate in the spindle axis at which no collision between tool and workpiece (fixtures) can occur. Input range 0 to 99999.9999;
- **Climb or up-cut** Q351: Type of milling operation with M3
  +1 = Climb
  –1 = Up-cut (If you enter 0, climb milling is used for machining)
- **Path overlap factor** Q370: Q370 x tool radius = stepover factor k. Input range: 0.1 to 1.414

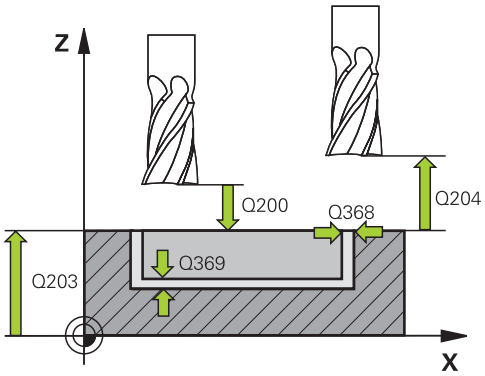

NC blocks

8 CYCL DEF 251 RECTANGULAR POCKET	
Q215=0	;MACHINING OPERATION
Q218=80	;FIRST SIDE LENGTH
Q219=60	;2ND SIDE LENGTH
Q201=-20	;DEPTH
Q367=0	;POCKET POSITION
Q202=5	;PLUNGING DEPTH
Q207=500	;FEED RATE FOR MILLING
Q206=150	;FEED RATE FOR PLNGNG
Q385=500	;FINISHING FEED RATE
Q368=0.2	;ALLOWANCE FOR SIDE
Q369=0.1	;ALLOWANCE FOR FLOOR
Q338=5	;INFEED FOR FINISHING
Q200=2	;SET-UP CLEARANCE
Q203=+0	;SURFACE COORDINATE
Q204=50	;2ND SET-UP CLEARANCE
Q351=+1	;CLIMB OR UP-CUT
Q370=1	;TOOL PATH OVERLAP
9 X+50 R0 FMAX	
10 Y+50 R0 FMAX M3 M99	

18.3 SLOT MILLING (Cycle 253, DIN/ISO: G253)

Cycle run

Use Cycle 253 to completely machine a slot. Depending on the cycle parameters, the following machining alternatives are available:

- Complete machining: Roughing and finishing
- Only roughing
- Only finishing

Roughing

1 Starting from the left slot arc center, the tool advances to the first plunging depth. The plunging position can be changed with parameter Q352.
2 The tool moves to the right slot arc center and then advances to the next depth in the tool axis direction. (Depending on parameter Q352)
3 This process is repeated until the programmed slot depth is reached.
4 During roughing the TNC does **not** perform a stepover. The machined slot is only as wide as the tool diameter, regardless of parameter Q219.

Finishing

5 Starting from the left slot arc center, the tool advances to the first plunging depth. (Depending on parameter Q352)
6 The TNC then moves the tool on linear paths along the slot walls. The corner radius of the slot is the radius of the finishing tool.
7 As soon as the tool has finished all slot walls at this depth, it advances to the next depth. (Depending on parameter Q352)
8 This process is repeated until the programmed slot depth is reached.

Please note while programming:

Pre-position the tool in the machining plane to the starting position with radius compensation **R0**. Note parameter Q367 (position).

The TNC automatically pre-positions the tool in the tool axis. Note the **2nd** set-up clearance Q204.

At the end of the cycle the TNC merely moves the tool in working plane back to the center of the slot; in the other working plane axis the TNC does not do any positioning. If you define a slot position not equal to 0, then the TNC only positions the tool in the tool axis to the 2nd set-up clearance. Prior to a new cycle call, move the tool back to the starting position or program always absolute traverse motions after the cycle call.

The algebraic sign for the cycle parameter DEPTH determines the working direction. If you program DEPTH=0, the cycle will not be executed.

The TNC reduces the infeed depth to the LCUTS tool length defined in the tool table if the tool length is shorter than the Q202 infeed depth programmed in the cycle.

Danger of collision!

Use the machine parameter **displayDepthErr** to define whether, if a positive depth is entered, the TNC should output an error message (on) or not (off).

Keep in mind that the TNC reverses the calculation for pre-positioning when a **positive depth is entered**. This means that the tool moves at rapid traverse in the tool axis to set-up clearance **below** the workpiece surface!

After roughing, the slot width equals the tool diameter, regardless of parameter Q219!

The diameter of the tool must be at least half the slot width.

If you are using a small roughing tool, the amount of material left over for the finishing tool may be very large—please keep this in mind when selecting the tools!

Cycle parameters

- **Machining operation (0/1/2)** Q215: Define the extent of machining:
  0: Roughing and finishing
  1: Roughing only
  2: Finishing only
- **Slot length** Q218 (value parallel to the reference axis of the working plane): Enter the length of the slot. Input range 0 to 99999.9999
- **Slot width** Q219 (value parallel to the minor axis of the working plane): Enter the slot width. After roughing, the slot width equals the tool diameter, regardless of parameter Q219! Maximum slot width for finishing: Twice the tool diameter. Input range 0 to 99999.9999
- **Depth** Q201 (incremental): Distance between workpiece surface and bottom of slot. Input range -99999.9999 to 99999.9999
- **Slot direction** Q374: Specify whether the slot is rotated by 90 degrees (entry: 1) or by 0 degrees (entry: 0). The center of rotation is at the center of the slot.
- **Slot position (0/1/2/3/4)** Q367: Position of the slot in reference to the position of the tool when the cycle is called:
  0: Tool position = slot center
  1: Tool position = left end of slot
  2: Tool position = center of left slot arc
  3: Tool position = center of right slot arc
  4: Tool position = right end of slot
- **Plunging depth** Q202 (incremental): Infeed per cut. Enter a value greater than 0. Input range 0 to 99999.9999
- **Feed rate for milling** Q207: Traversing speed of the tool in mm/min while milling. Input range 0 to 99999.999 alternatively **FAUTO**, **FU**, **FZ**
- **Feed rate for plunging** Q206: Traversing speed of the tool while moving to depth in mm/min. Input range 0 to 99999.999; alternatively **FAUTO**, **FU**, **FZ**
- **Feed rate for finishing** Q385: Traversing speed of the tool during side and floor finishing in mm/min. Input range 0 to 99999.999; alternatively **FAUTO**, **FU**, **FZ**
- **Infeed for finishing** Q338 (incremental): Infeed per cut. Q338=0: Finishing in one infeed. Input range 0 to 99999.9999
- **Set-up clearance** Q200 (incremental): Distance between tool tip and workpiece surface. Input range 0 to 99999.9999;
- **Coordinate of workpiece surface** Q203 (absolute): Coordinate of the workpiece surface. Input range -99999.9999 to 99999.9999
- **2nd set-up clearance** Q204 (incremental): Coordinate in the spindle axis at which no collision

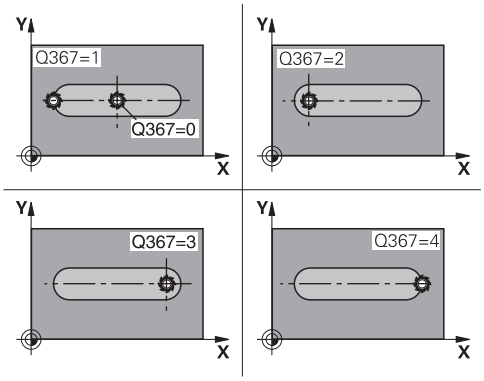

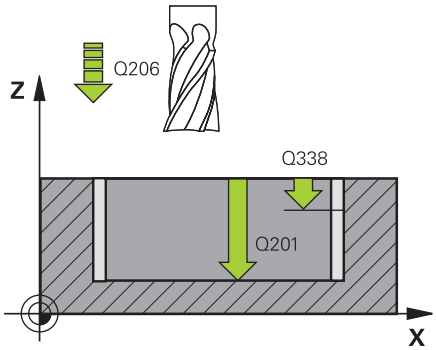

NC blocks

8 CYCL DEF 253 SLOT MILLING	
Q215=0	;MACHINING OPERATION
Q218=80	;SLOT LENGTH
Q219=12	;SLOT WIDTH
Q201=-20	;DEPTH
Q374=+0	;SLOT DIRECTION
Q367=0	;SLOT POSITION
Q202=5	;PLUNGING DEPTH
Q207=500	;FEED RATE FOR MILLING
Q206=150	;FEED RATE FOR PLNGNG
Q385=500	;FINISHING FEED RATE
Q338=5	;INFEED FOR FINISHING
Q200=2	;SET-UP CLEARANCE
Q203=+0	;SURFACE COORDINATE
Q204=50	;2ND SET-UP CLEARANCE
Q351=1	;CLIMB OR UP-CUT
Q352=0	;PLUNGING POSITION
9 L X+50 Y+50 R0 FMAX M3 M99	

between tool and workpiece (fixtures) can occur.
Input range 0 to 99999.9999;

- **Climb or up-cut** Q351: Type of milling operation with M3
  +1 = climb
  -1 = up-cut
  PREDEF: The TNC uses the value from the GLOBAL DEF block (If you enter 0, climb milling is used for machining)
- **Plunging position** Q352: Specify at which position along the reference axis the tool is to plunge:
  +1: Plunging position always at the right end of the slot
  -1: Plunging position always at the left end of the slot
  0: Reciprocating plunge

18.4 RECTANGULAR STUD (Cycle 256)

Cycle run

Use Cycle 256 to machine a rectangular stud. If a dimension of the workpiece blank is greater than the maximum possible stepover, then the TNC performs multiple stepovers until the finished dimension has been machined.

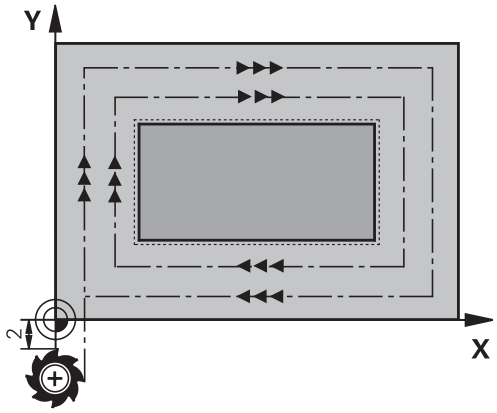

1 The tool moves from the cycle starting position (stud center) in the negative X direction to the starting position for stud machining. The starting position is to the left of the unmachined stud and is offset by the set-up clearance + tool radius.
2 If the tool is at the 2nd set-up clearance, it moves at rapid traverse **FMAX** to the set-up clearance, and from there advances to the first plunging depth at the feed rate for plunging.
3 The tool then moves on a straight line to the stud contour and machines one revolution.
4 If the finished dimension cannot be machined with one revolution, the TNC performs a stepover with the current factor, and machines another revolution. The TNC takes the dimensions of the workpiece blank, the finished dimension, and the permitted stepover into account. This process is repeated until the defined finished dimension has been reached.
5 If further stepovers are required, the tool then departs the contour and returns to the starting point of stud machining.
6 The TNC then plunges the tool to the next plunging depth, and machines the stud at this depth.
7 This process is repeated until the programmed stud depth is reached.

Please note while programming:

Pre-position the tool in the machining plane to the starting position with radius compensation **R0**. Note parameter Q367 (position).

The TNC automatically pre-positions the tool in the tool axis. Note the **2nd** set-up clearance Q204.

The algebraic sign for the cycle parameter DEPTH determines the working direction. If you program DEPTH=0, the cycle will not be executed.

The TNC reduces the infeed depth to the LCUTS tool length defined in the tool table if the tool length is shorter than the Q202 infeed depth programmed in the cycle.

Danger of collision!

Use the machine parameter **displayDepthErr** to define whether, if a positive depth is entered, the TNC should output an error message (on) or not (off).

Keep in mind that the TNC reverses the calculation for pre-positioning when a **positive depth is entered**. This means that the tool moves at rapid traverse in the tool axis to set-up clearance **below** the workpiece surface!

Cycle parameters

- **Machining operation (0/1/2)** Q215: Define machining operation:
  0: Roughing and finishing
  1: Only roughing
  2: Only finishing
  Side finishing and floor finishing are only machined when the specific allowance (Q368, Q369) is defined
- **1st side length** Q218: Stud length, parallel to the reference axis of the working plane. Input range 0 to 99999.9999
- **Workpiece blank side length 1** Q424: Length of the stud blank, parallel to the reference axis of the working plane. Enter **Workpiece blank side length 1** greater than **1st side length.** The TNC performs multiple stepovers if the difference between blank dimension 1 and finished dimension 1 is greater than the permitted stepover (tool radius multiplied by path overlap **Q370**). The TNC always calculates a constant stepover. Input range 0 to 99999.9999
- **2nd side length** Q219: Stud length, parallel to the minor axis of the working plane. Enter **Workpiece blank side length 2** greater than **2nd side length**. The TNC performs multiple stepovers if the difference between blank dimension 2 and finished dimension 2 is greater than the permitted stepover (tool radius multiplied by path overlap **Q370**). The TNC always calculates a constant stepover. Input range 0 to 99999.9999
- **Workpiece blank side length 2** Q425: Length of the stud blank, parallel to the minor axis of the working plane. Input range 0 to 99999.9999
- **Depth** Q201 (incremental): Distance between workpiece surface and bottom of stud. Input range -99999.9999 to 99999.9999
- **Stud position** Q367: Position of the stud in reference to the position of the tool when the cycle is called:
  0: Tool position = stud center
  1: Tool position = left corner below
  2: Tool position = right corner below
  3: Tool position = right corner top
  4: Tool position = left top corner top
- **Plunging depth** Q202 (incremental): Infeed per cut. Enter a value greater than 0. Input range 0 to 99999.9999
- **Feed rate for milling** Q207: Traversing speed of the tool in mm/min while milling. Input range 0 to 99999.999 alternatively **FAUTO**, **FU**, **FZ**

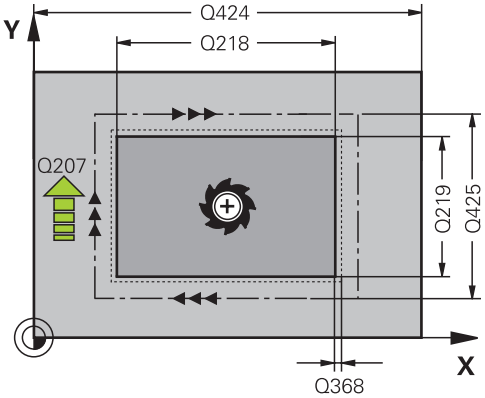

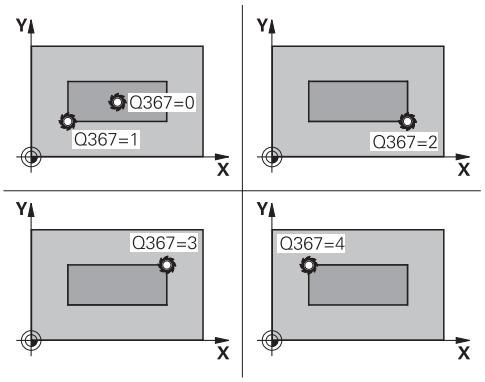

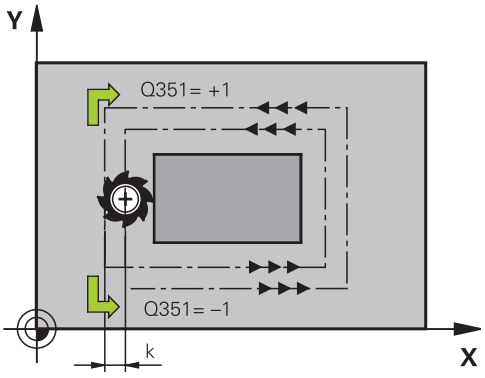

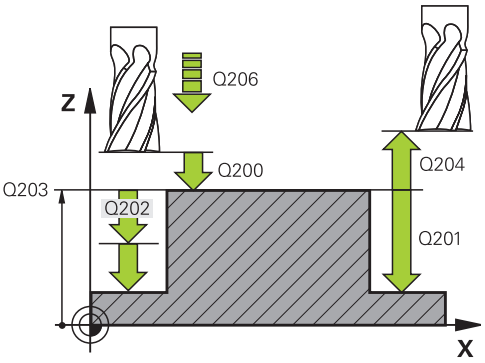

- **Feed rate for plunging** Q206: Traversing speed of the tool while moving to depth in mm/min. Input range 0 to 99999.999; alternatively **FMAX**, **FAUTO**, **FU**, **FZ**
- **Feed rate for finishing** Q385: Traversing speed of the tool during side and floor finishing in mm/min. Input range 0 to 99999.999; alternatively **FAUTO**, **FU**, **FZ**
- **Finishing allowance for side** Q368 (incremental): Finishing allowance in the working plane, is left over after machining. Input range 0 to 99999.9999
- **Finishing allowance for floor** Q369 (incremental value): Finishing allowance in the tool axis. Input range 0 to 99999.9999
- **Infeed for finishing** Q338 (incremental): Infeed per cut. Q338=0: Finishing in one infeed. Input range 0 to 99999.9999
- **Set-up clearance** Q200 (incremental): Distance between tool tip and workpiece surface. Input range 0 to 99999.9999;
- **Coordinate of workpiece surface** Q203 (absolute): Coordinate of the workpiece surface. Input range -99999.9999 to 99999.9999
- **2nd set-up clearance** Q204 (incremental): Coordinate in the spindle axis at which no collision between tool and workpiece (fixtures) can occur. Input range 0 to 99999.9999;
- **Climb or up-cut** Q351: Type of milling operation with M3
  +1 = Climb
  –1 = Up-cut (If you enter 0, climb milling is used for machining)
- **Path overlap factor** Q370: Q370 x tool radius = stepover factor k. Input range: 0.1 to 1.9999;

NC blocks

```
8 CYCL DEF 256 RECTANGULAR STUD
    Q215=0      ;MACHINING OPERATION
    Q218=60     ;FIRST SIDE LENGTH
    Q424=74     ;WORKPC. BLANK SIDE 1
    Q219=40     ;2ND SIDE LENGTH
    Q425=60     ;WORKPC. BLANK SIDE 2
    Q201=-20    ;DEPTH
    Q367=0      ;STUD POSITION
    Q202=5      ;PLUNGING DEPTH
    Q207=500    ;FEED RATE FOR MILLING
    Q206=150    ;FEED RATE FOR PLNGNG
    Q385=500    ;FINISHING FEED RATE
    Q368=0.2    ;ALLOWANCE FOR SIDE
    Q369=0.1    ;ALLOWANCE FOR FLOOR
    Q338=5      ;INFEED FOR FINISHING
    Q200=2      ;SET-UP CLEARANCE
    Q203=+0     ;SURFACE COORDINATE
    Q204=50     ;2ND SET-UP CLEARANCE
    Q351=+1     ;CLIMB OR UP-CUT
    Q370=1      ;TOOL PATH OVERLAP
9 X+50 R0 FMAX
10 Y+50 R0 FMAX M3 M99
```

18.5 FACE MILLING (Cycle 233)

Cycle run

Cycle 233 is used to face mill a level surface in multiple infeeds while taking the finishing allowance into account. You can also define side walls in the cycle, which are then taken into account when machining the level surface. The cycle offers you various machining strategies:

- **Strategy Q389=0**: Meander machining, stepover outside the surface being machined
- **Strategy Q389=1**: Meander machining, stepover at the edge of the surface being machined
- **Strategy Q389=2**: The surface is machined line by line with overtravel; stepover after retracting at rapid traverse
- **Strategy Q389=3**: The surface is machined line by line without overtravel; stepover after retracting at rapid traverse
- **Strategy Q389=4**: Helical machining from the outside toward the inside

1. From the current position, the TNC positions the tool at rapid traverse **FMAX** to the starting point **1** in the working plane: The starting point in the working plane is offset from the edge of the workpiece by the tool radius and the safety clearance to the side.
2. The TNC then positions the tool at rapid traverse **FMAX** to the set-up clearance in the spindle axis.
3. The tool then moves in the tool axis at the feed rate for milling Q207 to the first plunging depth calculated by the TNC.

Strategies Q389=0 and Q389 =1

The strategies Q389=0 and Q389=1 differ in the overtravel during face milling. If Q389=0, the end point lies outside of the surface. If Q389=1, it lies at the edge of the surface. The TNC calculates the end point **2** from the side length and the safety clearance to the side. If the strategy Q389=0 is used, the TNC additionally moves the tool beyond the level surface by the tool radius.

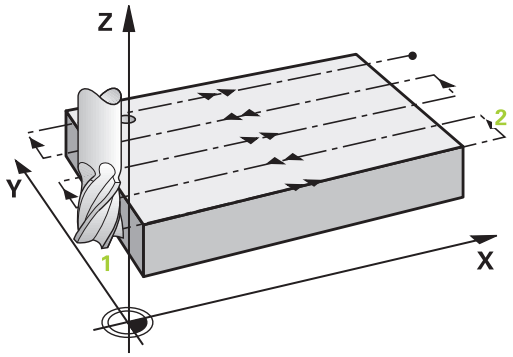

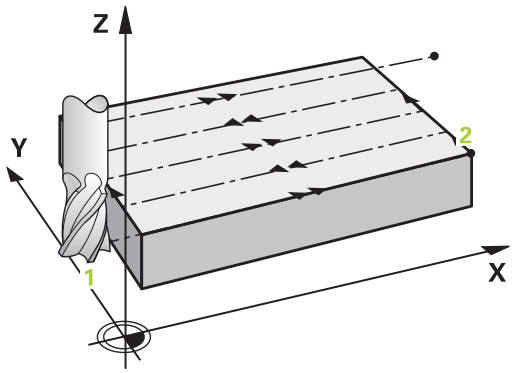

4 The TNC moves the tool to the end point **2** at the programmed feed rate for milling.
5 Then the TNC offsets the tool to the starting point in the next pass at the pre-positioning feed rate. The offset is calculated from the programmed width, the tool radius, the maximum path overlap factor and the safety clearance to the side.
6 The tool then returns at the feed rate for milling in the opposite direction.
7 The process is repeated until the programmed surface has been completed.
8 The TNC then positions the tool at rapid traverse **FMAX** back to the starting point **1**.
9 If more than one infeed is required, the TNC moves the tool in the spindle axis to the next plunging depth at the positioning feed rate.
10 The process is repeated until all infeeds have been machined. In the last infeed, only the finishing allowance entered is milled at the finishing feed rate.
11 At the end of the cycle, the tool is retracted at **FMAX** to the 2nd set-up clearance.

Strategies Q389=2 and Q389 =3

The strategies Q389=2 and Q389=3 differ in the overtravel during face milling. If Q389=2, the end point lies outside of the surface. If Q389=3, it lies at the edge of the surface. The TNC calculates the end point **2** from the side length and the safety clearance to the side. If the strategy Q389=2 is used, the TNC additionally moves the tool beyond the level surface by the tool radius.

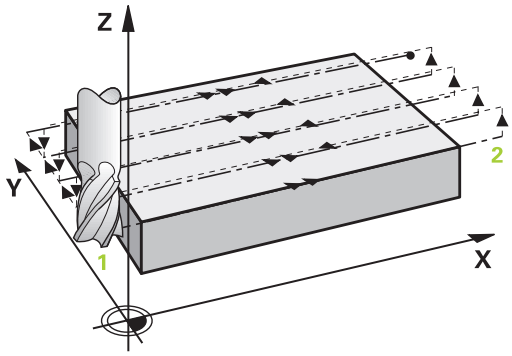

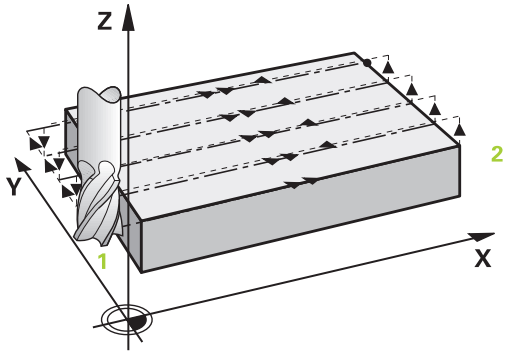

4 The tool subsequently advances to the end point **2** at the programmed feed rate for milling.

5 The TNC positions the tool in the spindle axis to the set-up clearance over the current infeed depth, and then moves at **FMAX** paraxially back to the starting point in the next line. The TNC calculates the offset from the programmed width, the tool radius, the maximum path overlap factor and the safety clearance to the side.

6 The tool then returns to the current infeed depth and moves in the direction of the next end point **2**.

7 The multipass process is repeated until the programmed surface has been completed. At the end of the last path, the TNC positions the tool at rapid traverse **FMAX** back to the starting point **1**.

8 If more than one infeed is required, the TNC moves the tool in the spindle axis to the next plunging depth at the positioning feed rate.

9 The process is repeated until all infeeds have been machined. In the last infeed, only the finishing allowance entered is milled at the finishing feed rate.

10 At the end of the cycle, the tool is retracted at **FMAX** to the 2nd set-up clearance.

Strategy Q389=4

4 The tool subsequently approaches the starting point of the milling path on a straight line tangential arc at the programmed **feed rate for milling**.

5 The TNC machines the level surface at the feed rate for milling from the outside toward the inside with ever-shorter milling paths. The constant stepover results in the tool being continuously engaged.

6 The process is repeated until the programmed surface has been completed. At the end of the last path, the TNC positions the tool at rapid traverse **FMAX** back to the starting point **1**.

7 If more than one infeed is required, the TNC moves the tool in the spindle axis to the next plunging depth at the positioning feed rate.

8 The process is repeated until all infeeds have been machined. In the last infeed, only the finishing allowance entered is milled at the finishing feed rate.

9 At the end of the cycle, the tool is retracted at **FMAX** to the **2nd set-up clearance**.

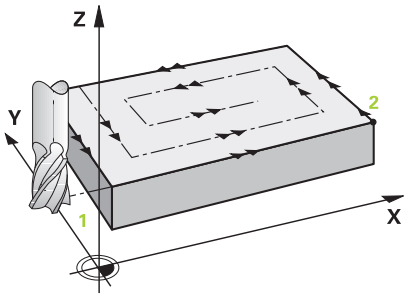

Limits

The limits enable you to set limits to the machining of the level surface so that, for example, side walls or shoulders are considered during machining. A side wall that is defined by a limit is machined to the finished dimension resulting from the starting point or the side lengths of the level surface. During roughing the TNC takes the allowance for the side into account, whereas during finishing the allowance is used for pre-positioning the tool.

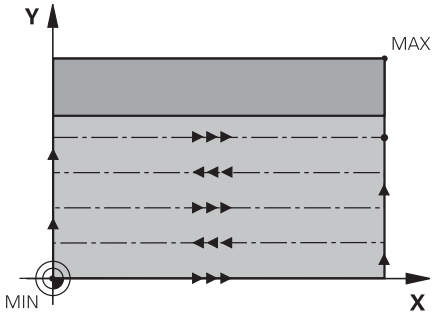

Please note while programming:

Pre-position the tool in the machining plane to the starting position with radius compensation **R0**. Keep in mind the machining direction.

The TNC automatically pre-positions the tool in the tool axis. Note the **2nd** set-up clearance Q204.

Enter the **2nd set-up clearance** in Q204 so that no collision with the workpiece or the fixtures can occur.

If the starting point in the 3rd axis Q227 and the end point in the 3rd axis Q386 are entered as equal values, the TNC does not run the cycle (depth = 0 has been programmed).

Danger of collision!

Use the machine parameter **displayDepthErr** to define whether, if a positive depth is entered, the TNC should output an error message (on) or not (off).

Keep in mind that the TNC reverses the calculation for pre-positioning if starting point < end point is entered. This means that the tool moves at rapid traverse in the tool axis to set-up clearance below the workpiece surface!

Cycle parameters

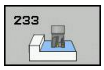

- **Machining operation (0/1/2)** Q215: Define machining operation:
  0: Roughing and finishing
  1: Only roughing
  2: Only finishing
  Side finishing and floor finishing are only machined when the specific allowance (Q368, Q369) is defined
- **Milling strategy (0 to 4)** Q389: Determine how the TNC should machine the surface:
  0: Meander machining, stepover at the positioning feed rate outside the surface to be machined
  1: Meander machining, stepover at the feed rate for milling at the edge of the surface to be machined
  2: Line-by-line machining, retraction and stepover at the positioning feed rate outside the surface to be machined
  3: Line-by-line machining, retraction and stepover at the positioning feed rate at the edge of the surface to be machined
  4: Helical machining, uniform infeed from the outside toward the inside
- **Milling direction** Q350: Axis in the machining plane that defines the machining direction:
  1: Reference axis = machining direction
  2: Minor axis = machining direction
- **1st side length** Q218 (incremental): Length of the surface to be multipass-milled in the reference axis of the working plane, referenced to the starting point in the 1st axis. Input range 0 to 99999.9999
- **2nd side length** Q219 (incremental value): Length of the surface to be machined in the minor axis of the working plane. Use the algebraic sign to specify the direction of the first stepover in reference to the **starting point in the 2nd axis**. Input range -99999.9999 to 99999.9999

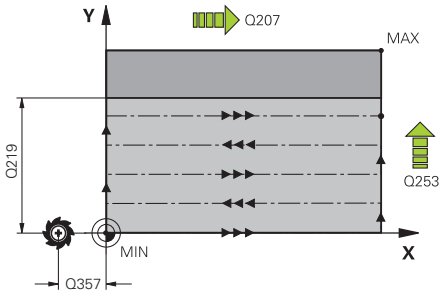

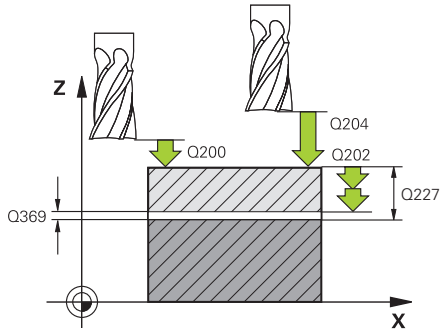

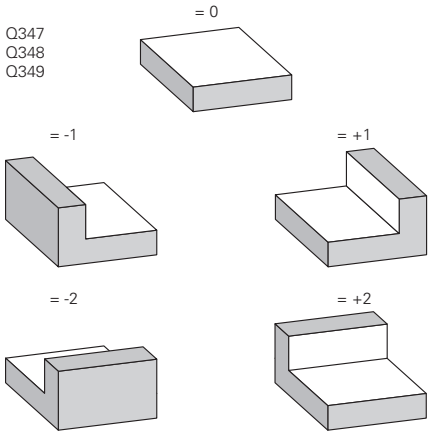

- **Starting point in 3rd axis** Q227 (absolute): Coordinate of the workpiece surface used to calculate the infeeds. Input range -99999.9999 to 99999.9999
- **End point in 3rd axis** Q386 (absolute): Coordinate in the spindle axis to which the surface is to be face milled. Input range -99999.9999 to 99999.9999
- **Allowance for floor** Q369 (incremental): Distance used for the last infeed. Input range 0 to 99999.9999
- **Plunging depth** Q202 (incremental): Infeed per cut. Enter a value greater than 0. Input range 0 to 99999.9999
- **Path overlap factor** Q370: Maximum stepover factor k. The TNC calculates the actual stepover from the second side length (Q219) and the tool radius so that a constant stepover is used for machining. Input range: 0.1 bis 1.9999.
- **Feed rate for milling** Q207: Traversing speed of the tool in mm/min while milling. Input range 0 to 99999.999 alternatively **FAUTO**, **FU**, **FZ**
- **Feed rate for finishing** Q385: Traversing speed of the tool in mm/min, while milling the last infeed. Input range 0 to 99999.9999; alternatively **FAUTO**, **FU**, **FZ**
- **Feed rate for pre-positioning** Q253: Traversing speed of the tool in mm/min when approaching the starting position and when moving to the next pass. If you are moving the tool transversely to the material (Q389=1), the TNC moves the tool at the feed rate for milling Q207. Input range 0 to 99999.9999, alternatively **FMAX**, **FAUTO**
- **Clearance to side** Q357 (incremental): Safety clearance to the side of the workpiece when the tool approaches the first plunging depth, and distance at which the stepover occurs if the machining strategy Q389=0 or Q389=2 is used. Input range 0 to 99999.9999
- **Set-up clearance** Q200 (incremental): Distance between tool tip and workpiece surface. Input range 0 to 99999.9999;

NC blocks

```
8 CYCL DEF 233 FACE MILLING
    Q215=0      ;MACHINING OPERATION
    Q389=2      ;MILLING STRATEGY
    Q350=1      ;MILLING DIRECTION
    Q218=120    ;1ST SIDE LENGTH
    Q219=80     ;2ND SIDE LENGTH
    Q227=0      ;STARTNG PNT 3RD AXIS
    Q386=-6     ;END POINT 3RD AXIS
    Q369=0.2    ;ALLOWANCE FOR FLOOR
    Q202=3      ;MAX. PLUNGING DEPTH
    Q370=1      ;TOOL PATH OVERLAP
    Q207=500    ;FEED RATE FOR MILLING
    Q385=500    ;FINISHING FEED RATE
    Q253=750    ;F PRE-POSITIONING
    Q357=2      ;CLEARANCE TO THE SIDE
    Q200=2      ;SET-UP CLEARANCE
    Q204=50     ;2ND SET-UP CLEARANCE
    Q347=0      ;1ST LIMIT
    Q348=0      ;2ND LIMIT
    Q349=0      ;3RD LIMIT
    Q368=0      ;ALLOWANCE FOR SIDE
    Q338=0      ;INFEED FOR FINISHING
9 L X+0 Y+0 R0 FMAX M3 M99
```

- **2nd set-up clearance** Q204 (incremental): Coordinate in the spindle axis at which no collision between tool and workpiece (fixtures) can occur. Input range 0 to 99999.9999;
- **1st limit** Q347:Select the workpiece side on which the level surface is limited by a side wall. Depending on the position of the side wall, the TNC limits the machining of the level surface to the respective coordinate of the starting point or to the side length: :
  Input **0**: No limit
  Input **-1**: Limit in the negative reference axis
  Input **+1**: Limit in the positive reference axis
  Input **-2**: Limit in the negative minor axis
  Input **+2**: Limit in the positive minor axis
- **2nd limit** Q348: See parameter 1st limit Q347
- **3rd limit** Q349: See parameter 1st limit Q347
- **Finishing allowance for side** Q368 (incremental): Finishing allowance in the working plane. Input range 0 to 99999.9999
- **Infeed for finishing** Q338 (incremental): Infeed per cut. Q338=0: Finishing in one infeed. Input range 0 to 99999.9999

18.6 Programming Examples

Example: Milling pockets, studs

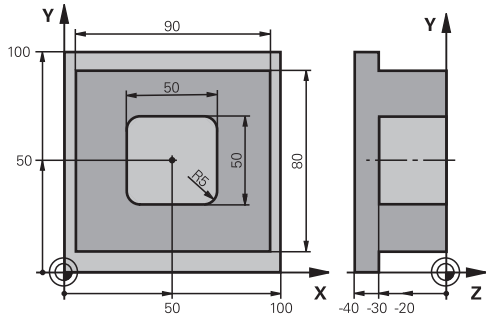

0 BEGINN PGM C210 MM		
1 BLK FORM 0.1 Z X+0 Y+0 Z-40		Definition of workpiece blank
2 BLK FORM 0.2 X+100 Y+100 Z+0		
3 TOOL CALL 1 Z S3500		Call the tool for roughing/finishing
4 Z+250 R0 FMAX		Retract the tool
5 CYCL DEF 256 RECTANGULAR STUD		Define cycle for machining the contour outside
Q218=90	;FIRST SIDE LENGTH	
Q424=100	;WORKPC. BLANK SIDE 1	
Q219=80	;2ND SIDE LENGTH	
Q425=100	;WORKPC. BLANK SIDE 2	
Q201=-30	;DEPTH	
Q367=0	;STUD POSITION	
Q202=5	;PLUNGING DEPTH	
Q207=250	;FEED RATE FOR MILLING	
Q206=250	;FEED RATE FOR PLNGNG	
Q385=750	;FINISHING FEED RATE	
Q368=0	;ALLOWANCE FOR SIDE	
Q369=0.1	;ALLOWANCE FOR FLOOR	
Q338=5	;INFEED FOR FINISHING	
Q200=2	;SET-UP CLEARANCE	
Q203=+0	;SURFACE COORDINATE	
Q204=20	;2ND SET-UP CLEARANCE	
Q351=+1	;CLIMB OR UP-CUT	
Q370=1	;TOOL PATH OVERLAP	
6 X+50 R0		Outside machining
7 Y+50 R0 M3 M99		Call cycle for machining the contour outside
8 CYCL DEF 252 RECTANGULAR POCKET		Define RECTANGULAR POCKET cycle
Q215=0	;MACHINING OPERATION	
Q218=50	;FIRST SIDE LENGTH	
Q219=50	;2ND SIDE LENGTH	

Q201=-30	;DEPTH	
Q367=+0	;POCKET POSITION	
Q202=5	;PLUNGING DEPTH	
Q207=500	;FEED RATE FOR MILLING	
Q206=150	;FEED RATE FOR PLNGNG	
Q385=750	;FINISHING FEED RATE	
Q368=0.2	;ALLOWANCE FOR SIDE	
Q369=0.1	;ALLOWANCE FOR FLOOR	
Q338=5	;INFEED FOR FINISHING	
Q200=2	;SET-UP CLEARANCE	
Q203=+0	;SURFACE COORDINATE	
Q204=50	;2ND SET-UP CLEARANCE	
Q351=+1	;CLIMB OR UP-CUT	
Q370=1	;TOOL PATH OVERLAP	
9 X+50 R0 FMAX		
10 Y+50 R0 FMAX M99		Cycle call
11 Z+250 R0 FMAX M30		
12 END PGM C210 MM		

19

Cycles: Coordinate Transformations

19.1 Fundamentals

Overview

Once a contour has been programmed, you can position it on the workpiece at various locations and in different sizes through the use of coordinate transformations. The TNC provides the following coordinate transformation cycles:

Cycle	Soft key	Page
7 DATUM For shifting contours directly within the program or from datum tables	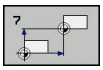	471
247 DATUM SETTING Datum setting during program run	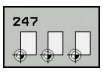	477
8 MIRRORING Mirroring contours	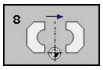	478
11 SCALING FACTOR Increasing or reducing the size of contours	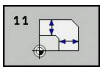	479
26 AXIS-SPECIFIC SCALING Increasing or reducing the size of contours with axis-specific scaling	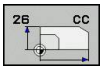	480

Effect of coordinate transformations

Beginning of effect: A coordinate transformation becomes effective as soon as it is defined—it is not called separately. It remains in effect until it is changed or canceled.

To cancel coordinate transformations:

- Define cycles for basic behavior with a new value, such as scaling factor 1.0
- Execute a miscellaneous function M2, M30, or an END PGM block (depending on machine parameter **clearMode**).
- Select a new program

19.2 DATUM SHIFT (Cycle 7)

Effect

A DATUM SHIFT allows machining operations to be repeated at various locations on the workpiece.

When the DATUM SHIFT cycle is defined, all coordinate data is based on the new datum. The TNC displays the datum shift in each axis in the additional status display. Input of rotary axes is also permitted.

Resetting

- Program a datum shift to the coordinates X=0, Y=0 etc. directly with a cycle definition.
- Call a datum shift to the coordinates X=0; Y=0 etc. from a datum table.

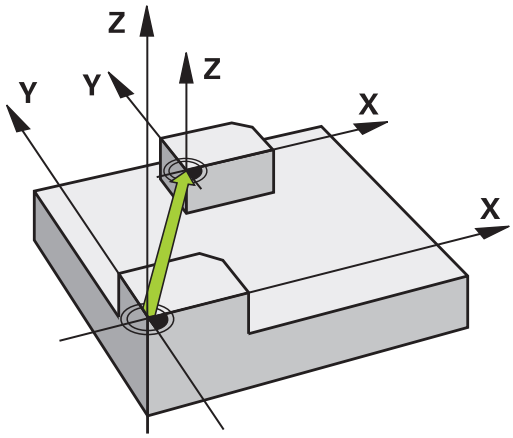

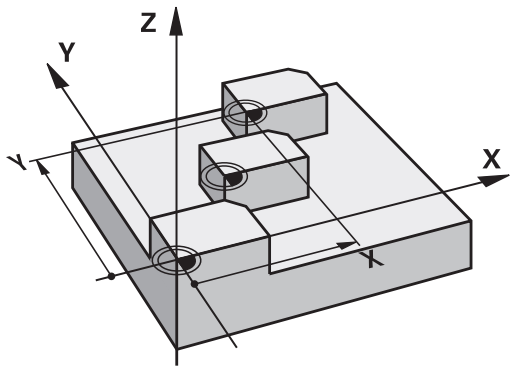

Cycle parameters

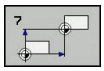

- **Datum shift**: Enter the coordinates of the new datum. Absolute values are referenced to the manually set workpiece datum. Incremental values are always referenced to the datum which was last valid—this can be a datum which has already been shifted. Input range: Up to six NC axes, each from –99999.9999 to 99999.9999

NC blocks

```
13 CYCL DEF 7.0 DATUM
14 CYCL DEF 7.1 X+60
15 CYCL DEF 7.2 Y+40
16 CYCL DEF 7.3 Z-5
```

19.3 DATUM SHIFT with datum tables (Cycle 7)

Effect

Datum tables are used for:

- Frequently recurring machining sequences at various locations on the workpiece
- Frequent use of the same datum shift

Within a program, you can either program datum points directly in the cycle definition or call them from a datum table.

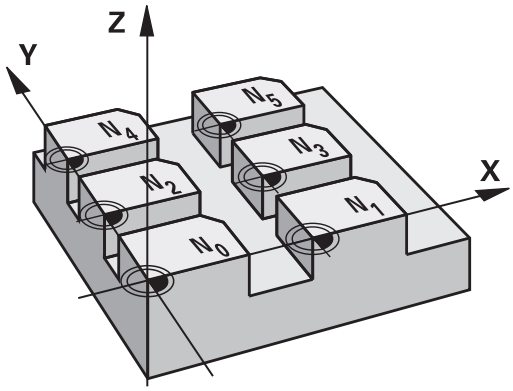

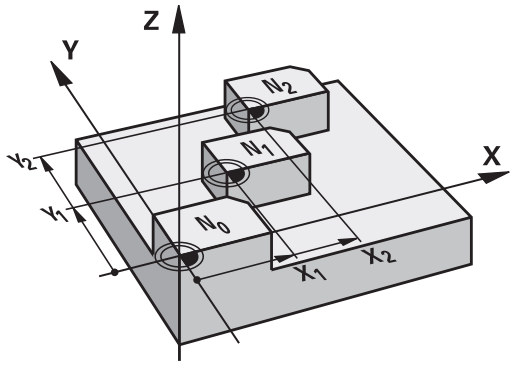

Resetting

- Call a datum shift to the coordinates X=0; Y=0 etc. from a datum table.
- Execute a datum shift to the coordinates X=0, Y=0 etc. directly with a cycle definition

Status displays

In the additional status display, the following data from the datum table are shown:

- Name and path of the active datum table
- Active datum number
- Comment from the DOC column of the active datum number

Please note while programming:

Danger of collision!

Datums from a datum table are **always and exclusively** referenced to the current datum (preset).

If you are using datum shifts with datum tables, then use the **SEL TABLE** function to activate the desired datum table from the NC program.

If you work without **SEL TABLE**, then you must activate the desired datum table before the test run or the program run. (This applies also to the programming graphics).

- Use the file management to select the desired table for a test run in the **Test Run** operating mode: The table receives the status S
- Use the file management in the **Program Run, Single Block** and **Program Run, Full Sequence** operating modes to select the desired table for program run: The table receives the status M

The coordinate values from datum tables are only effective with absolute coordinate values.

If you create datum tables, the file name has to start with a letter.

Cycle parameters

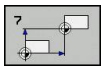

- **Datum shift**: Enter the number of the datum from the datum table or a Q parameter. If you enter a Q parameter, the TNC activates the datum number entered in the Q parameter. Input range: 0 to 9999

NC blocks

```
77 CYCL DEF 7.0 DATUM SHIFT
78 CYCL DEF 7.1 #5
```

Selecting a datum table in the part program

With the **SEL TABLE** function you select the table from which the TNC takes the datums:

PGM CALL

- Select the functions for program call: Press the **PGM CALL** key

DATUM TABLE

- Press the **DATUM TABLE** soft key
- Select the complete path name of the datum table or the file with the **SELECT** soft key and confirm your entry with the **END** key

Program a **SEL TABLE** block before Cycle 7 Datum Shift.

A datum table selected with **SEL TABLE** remains active until you select another datum table with **SEL TABLE** or through **PGM MGT**.

Edit the datum table in the Programming mode of operation

After you have changed a value in a datum table, you must save the change with the **ENT** key. Otherwise the change might not be included during program run.

Select the datum table in the **Programming** mode of operation

PGM MGT

- Call the file manager: Press the **PGM MGT** key
- Display the datum tables: Press the **SELECT TYPE** and **SHOW .D** soft keys
- Select the desired table or enter a new file name.
- Edit the file The functions displayed in the soft-key row for editing include:

Soft key	Function
BEGIN	Select beginning of table
END	Select end of table
PAGE	Go to the previous page
PAGE	Go to next page
INSERT LINE	Insert line
DELETE LINE	Delete line
FIND	Find
BEGIN LINE	Go to beginning of line
END LINE	Go to end of line
COPY FIELD	Copy the current value
PASTE FIELD	Insert the copied value
APPEND N LINES	Add the entered number of lines (datums) to the end of the table

Configuring the datum table

If you do not wish to define a datum for an active axis, press the **CE** key. Then the TNC clears the numerical value from the corresponding input field.

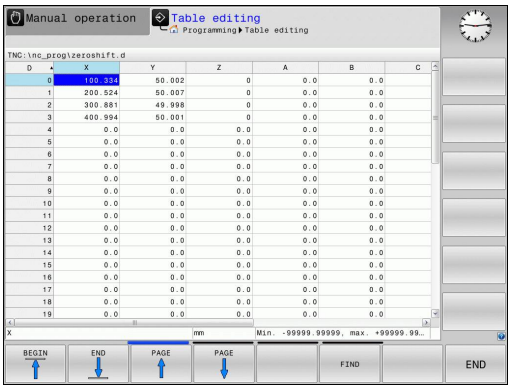

> You can change the properties of tables. Enter the code number 555343 in the MOD menu. The TNC then offers the **EDIT FORMAT** soft key if a table is selected. When you press this soft key, the TNC opens a pop-up window where the properties are shown for each column of the selected table. Any changes made only affect the open table.

To exit a datum table

Select a different type of file in file management and choose the desired file.

> **!** After you have changed a value in a datum table, you must save the change with the **ENT** key. Otherwise the change may not be included during program run.

Status displays

In the additional status display, the TNC shows the values of the active datum shift.

19.4 DATUM SETTING (Cycle 247)

Effect

With the DATUM SETTING cycle you can activate as the new datum a preset defined in a preset table.

After a DATUM SETTING cycle definition, all of the coordinate inputs and datum shifts (absolute and incremental) are referenced to the new preset.

Status display

In the status display the TNC shows the active preset number behind the datum symbol.

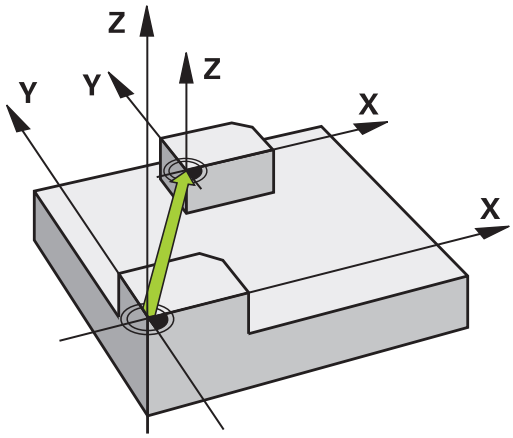

Please note before programming:

When activating a datum from the preset table, the TNC resets the datum shift, mirroring, scaling factor and axis-specific scaling factor.

If you activate preset number 0 (line 0), then you activate the datum that you last set in the **Manual Operation** or **El. Handwheel** operating mode.

Cycle 247 is not functional in **Test Run** mode.

Cycle parameters

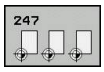

- **Number for datum?**: Enter the number of the datum to be activated from the preset table. Input range: 0 to 65535

NC blocks

```
13 CYCL DEF 247 DATUM SETTING
    Q339=4      ;DATUM NUMBER
```

19.5 MIRRORING (Cycle 8)

Effect

The TNC can machine the mirror image of a contour in the working plane.

The mirroring cycle becomes effective as soon as it is defined in the program. It is also effective in the **Positioning with MDI** mode of operation. The active mirrored axes are shown in the additional status display.

- If you mirror only one axis, the machining direction of the tool is reversed
- If you mirror two axes, the machining direction remains the same.

The result of the mirroring depends on the location of the datum:

- If the datum lies on the contour to be mirrored, the element simply flips over.
- If the datum lies outside the contour to be mirrored, the element also "jumps" to another location.

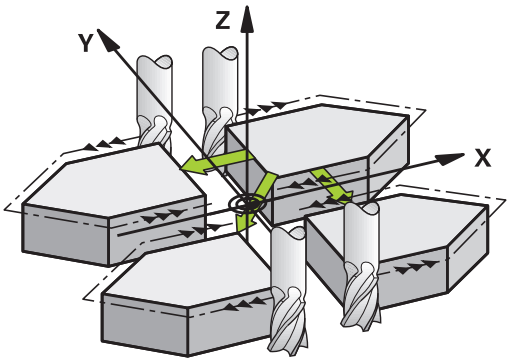

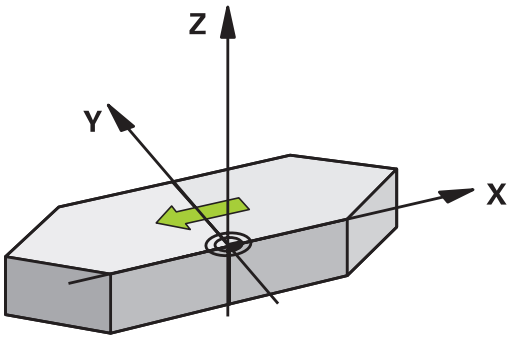

Resetting

Program the MIRROR IMAGE cycle once again with **NO ENT**.

Cycle parameters

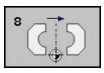

- **Mirrored axis?**: Enter the axis to be mirrored. You can mirror all axes except for the spindle axis—including rotary axes—with the exception of the spindle axis and its associated auxiliary axis. You can enter up to three axes. Input range: Up to three NC axes **X**, **Y**, **Z**, **U**, **V**, **W**, **A**, **B**, **C**

NC blocks

```
79 CYCL DEF 8.0 MIRROR IMAGE
80 CYCL DEF 8.1 X Y Z
```

19.6 SCALING (Cycle 11

Effect

The TNC can increase or reduce the size of contours within a program, enabling you to program shrinkage and oversize allowances.

The SCALING FACTOR becomes effective as soon as it is defined in the program. It is also effective in the **Positioning with MDI** mode of operation. The active scaling factor is shown in the additional status display.

The scaling factor has an effect on

- all three coordinate axes at the same time
- Dimensions in cycles

Prerequisite

It is advisable to set the datum to an edge or a corner of the contour before enlarging or reducing the contour.

Enlargement: SCL greater than 1 (up to 99.999 999)

Reduction: SCL less than 1 (down to 0.000 001)

Resetting

Program the SCALING cycle once again with a scaling factor of 1.

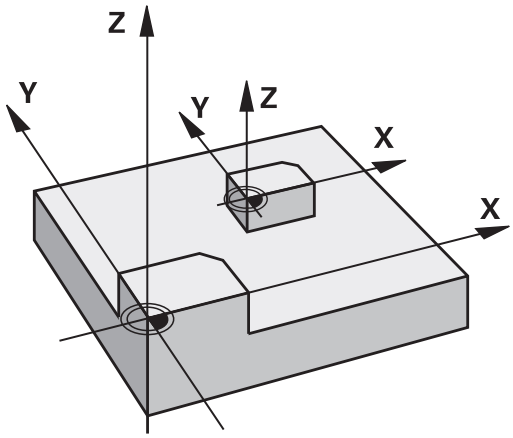

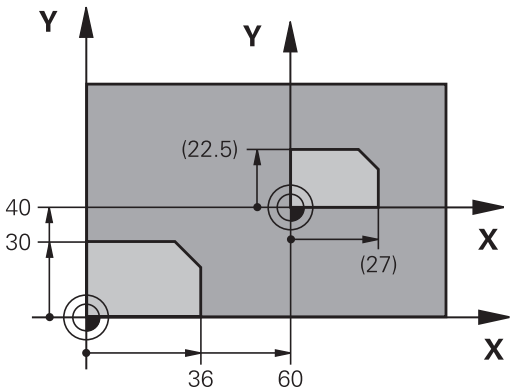

Cycle parameters

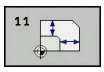

- **Scaling factor?**: Enter the scaling factor SCL. The TNC multiplies the coordinates and radii by the SCL factor (as described under "Effect" above). Input range 0.000001 to 99.999999

NC blocks

```
11 CALL LBL 1
12 CYCL DEF 7.0 DATUM
13 CYCL DEF 7.1 X+60
14 CYCL DEF 7.2 Y+40
15 CYCL DEF 11.0 SCALING
16 CYCL DEF 11.1 SCL 0.75
17 CALL LBL 1
```

19.7 AXIS-SPECIFIC SCALING (Cycle 26)

Effect

With Cycle 26 you can account for shrinkage and oversize factors for each axis.

The SCALING FACTOR becomes effective as soon as it is defined in the program. It is also effective in the **Positioning with MDI** mode of operation. The active scaling factor is shown in the additional status display.

Resetting

Program the SCALING cycle once again with a scaling factor of 1 for the same axis.

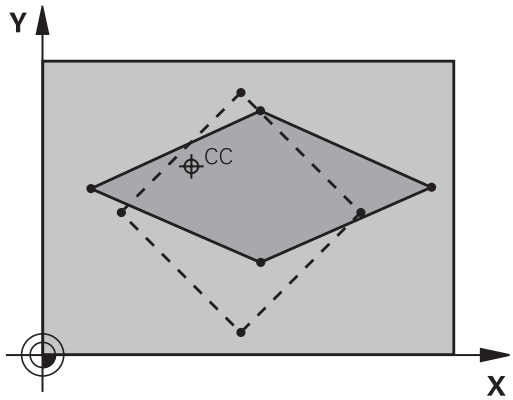

Please note while programming:

You can program each coordinate axis with its own axis-specific scaling factor.

In addition, you can enter the coordinates of a center for all scaling factors.

The size of the contour is enlarged or reduced with reference to the center, and not necessarily (as in Cycle 11 SCALING) with reference to the active datum.

Cycle parameters

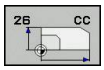

- **Axis and scaling factor**: Select the coordinate axis/ axes by soft key and enter the factor(s) involved in enlarging or reducing. Input range 0.000001 to 99.999999
- **Center coordinates**: Enter the center of the axis-specific enlargement or reduction. Input range -99999.9999 to 99999.9999

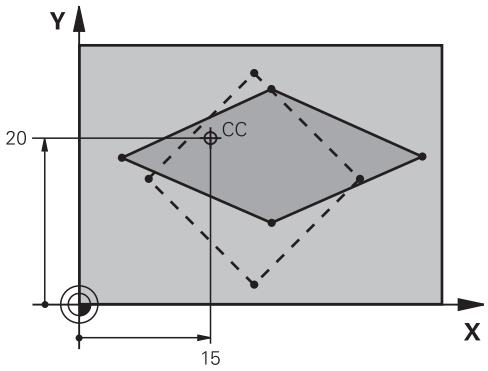

NC blocks

```
25 CALL LBL 1
26 CYCL DEF 26.0 AXIS-SPECIFIC
   SCALING
27 CYCL DEF 26.1 X 1.4 Y 0.6 CCX+15
   CCY+20
28 CALL LBL 1
```

19.8 Programming Examples

Example: Groups of holes

Program sequence:

- Approach the groups of holes in the main program
- Call the group of holes (subprogram 1) in the main program
- Program the group of holes only once in subprogram 1

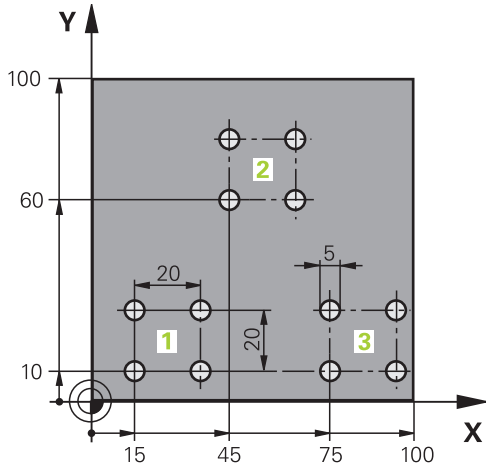

0 BEGIN PGM SP2 MM	
1 BLK FORM 0.1 Z X+0 Y+0 Z-20	
2 BLK FORM 0.2 X+100 Y+100 Z+0	
3 TOOL CALL 1 Z S3000	Tool call
4 Z+250 R0 FMAX M3	
5 CYCL DEF 200 DRILLING	Cycle definition: drilling
Q200=+2 ;SET-UP CLEARANCE	
Q201=-20 ;DEPTH	
Q206=+150 ;FEED RATE FOR PLNGNG	
Q202=+5 ;PLUNGING DEPTH	
Q210=+0 ;DWELL TIME AT TOP	
Q203=+0 ;SURFACE COORDINATE	
Q204=+50 ;2ND SET-UP CLEARANCE	
Q211=+0 ;DWELL TIME AT BOTTOM	
Q395=+0 ;DEPTH REFERENCE	
6 CYCL DEF 7.0 DATUM SHIFT	Datum shift
7 CYCL DEF 7.1 X+15	
8 CYCL DEF 7.2 Y+10	
9 CALL LBL 1	
10 CYCL DEF 7.0 DATUM SHIFT	Datum shift
11 CYCL DEF 7.1 X+75	
12 CYCL DEF 7.2 Y+10	
13 CALL LBL 1	
14 CYCL DEF 7.0 DATUM SHIFT	Datum shift
15 CYCL DEF 7.1 X+45	
16 CYCL DEF 7.2 Y+60	
17 CALL LBL 1	

18 CYCL DEF 7.0 DATUM SHIFT	
19 CYCL DEF 7.1 X+0	
20 CYCL DEF 7.2 Y+0	
21 Z+100 R0 FMAX M30	
22 LBL 1	
23 X+0 R0 FMAX	
24 Y+0 R0 FMAX M99	Move to 1st hole, call cycle
25 X+20 R0 FMAX M99	Move to 2nd hole, call cycle
26 Y+20 R0 FMAX M99	Move to 3rd hole, call cycle
27 X-20 R0 FMAX M99	Move to 4th hole, call cycle
28 LBL 0	
29 END PGM SP2 MM	

20

Cycles: Special Functions

20.1 Fundamentals

Overview

The TNC provides the following cycles for the following special purposes:

Cycle	Soft key	Page
9 DWELL TIME		487
12 PROGRAM CALL	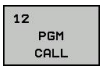	488
13 SPINDLE ORIENTATION	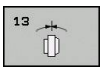	490

20.2 DWELL TIME (Cycle 9)

Function

This causes the execution of the next block within a running program to be delayed by the programmed DWELL TIME. A dwell time can be used for such purposes as chip breaking.

The cycle becomes effective as soon as it is defined in the program. Modal conditions such as spindle rotation are not affected.

NC blocks

```
89 CYCL DEF 9.0 DWELL TIME
90 CYCL DEF 9.1 DWELL 1.5
```

Cycle parameters

- **Dwell time in seconds**: Enter the dwell time in seconds. Input range: 0 to 3600 s (1 hour) in steps of 0.001 seconds

20.3 PROGRAM CALL (Cycle 12)

Cycle function

Routines that you have programmed (such as special drilling cycles or geometrical modules) can be written as main programs. These can then be called like fixed cycles.

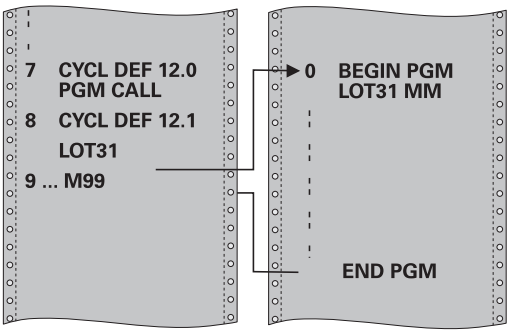

Please note while programming:

The program you are calling must be stored in the internal memory of your TNC.

If the program you are defining to be a cycle is located in the same directory as the program you are calling it from, you need only enter the program name.

If the program you are defining to be a cycle is not located in the same directory as the program you are calling it from, you must enter the complete path, for example **TNC:\KLAR35\FK1\50.H**.

As a rule, Q parameters are globally effective when called with Cycle 12. So please note that changes to Q parameters in the called program can also influence the calling program.

Cycle parameters

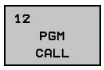

- **Program name**: Enter the name of the program you want to call and, if necessary, the directory it is located in or
- Activate the file select dialog with the **SELECT** soft key and select the program to be called

Call the program with:

- CYCL CALL (separate block) or
- M99 (blockwise) or
- M89 (executed after every positioning block)

Designate program 50 as a cycle and call it with M99

```
55 CYCL DEF 12.0 PGM CALL
56 CYCL DEF 12.1 PGM TNC:
   \KLAR35\FK1\50.H
57 X+20 FMAX
58 Y+50 FMAX M99
```

20.4 SPINDLE ORIENTATION (Cycle 13)

Cycle function

Machine and TNC must be specially prepared by the machine tool builder for use of this cycle.

The TNC can control the machine tool spindle and rotate it to a given angular position.

Oriented spindle stops are required for

- Tool changing systems with a defined tool change position
- Orientation of the transmitter/receiver window of HEIDENHAIN 3-D touch probes with infrared transmission

The angle of orientation defined in the cycle is positioned to by entering M19 or M20 (depending on the machine).

If you program M19 or M20 without having defined Cycle 13, the TNC positions the machine tool spindle to an angle that has been set by the machine manufacturer (see your machine manual).

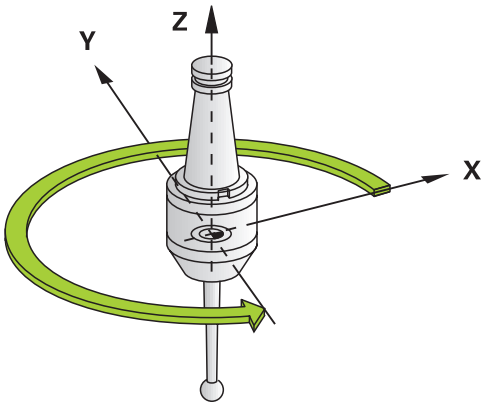

NC blocks

```
93 CYCL DEF 13.0 ORIENTATION
94 CYCL DEF 13.1 ANGLE 180
```

Please note while programming:

Cycle 13 is used internally for Cycles 202 and 204. Please note that, if required, you must program Cycle 13 again in your NC program after one of the machining cycles mentioned above.

Cycle parameters

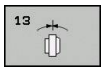

- **Angle of orientation**: Enter the angle referenced to the reference axis of the working plane. Input range: 0.0000° to 360.0000°

21

Touch probe cycles

21.1 General information about touch probe cycles

HEIDENHAIN only gives warranty for the function of the probing cycles if HEIDENHAIN touch probes are used.

The TNC must be specially prepared by the machine tool builder for the use of a 3-D touch probe.

Refer to your machine manual.

The touch probe cycles are available only with option number 17. If you are using a HEIDENHAIN touch probe, this option is available automatically.

Method of function

Whenever the TNC runs a touch probe cycle, the 3-D touch probe approaches the workpiece in one linear axis. This is also true during an active basic rotation or with a tilted working plane. The machine tool builder determines the probing feed rate in a machine parameter (see "Before You Start Working with Touch Probe Cycles" later in this chapter).

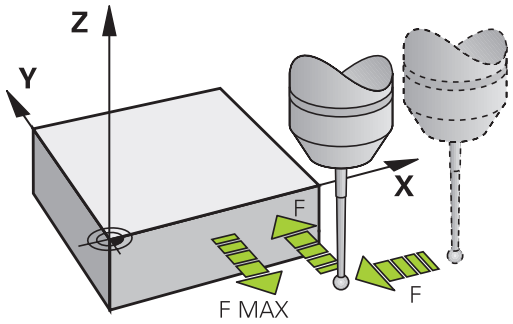

When the probe stylus contacts the workpiece,

- the 3-D touch probe transmits a signal to the TNC: the coordinates of the probed position are stored,
- the touch probe stops moving, and
- returns to its starting position at rapid traverse.

If the stylus is not deflected within a defined distance, the TNC displays an error message (distance: **DIST** from touch probe table).

Touch probe cycles in the Manual Operation and Electronic Handwheel operating modes

In the **Manual Operation** and **El. Handwheel** modes, the TNC provides touch probe cycles that allow you to:

- Calibrate the touch probe
- Setting datums

The manual touch probe cycles are described in the "Manual operation and setup" chapter (see "Using 3-D touch probes (option 17)", page 311).

21.2 Before You Start Working with Touch Probe Cycles

To make it possible to cover the widest possible range of applications, machine parameters enable you to determine the behavior common to all touch probe cycles.

Maximum traverse to touch point: DIST in touch probe table

If the stylus is not deflected within the path defined in **DIST**, the TNC outputs an error message.

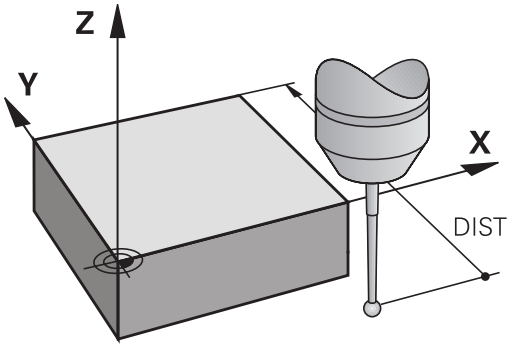

Set-up clearance to touch point: SET_UP in touch probe table

In **SET_UP** you define how far from the defined (or calculated) touch point the TNC is to pre-position the touch probe. The smaller the value you enter, the more exactly you must define the touch point position. In many touch probe cycles you can also define a set-up clearance that is added to **SET_UP**.

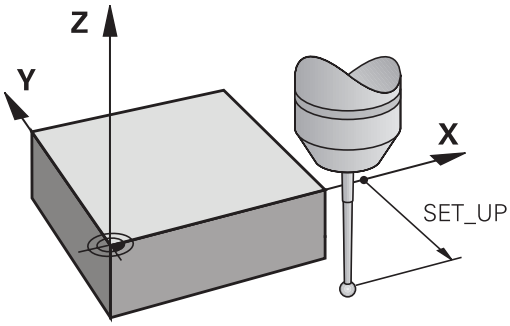

Orient the infrared touch probe to the programmed probe direction: TRACK in touch probe table

To increase measuring accuracy, you can use **TRACK = ON** to have an infrared touch probe oriented in the programmed probe direction before every probe process. In this way the stylus is always deflected in the same direction.

> ⇨ If you change **TRACK = ON**, you must recalibrate the touch probe.

Touch trigger probe, probing feed rate: F in touch probe table

In **F** you define the feed rate at which the TNC is to probe the workpiece.

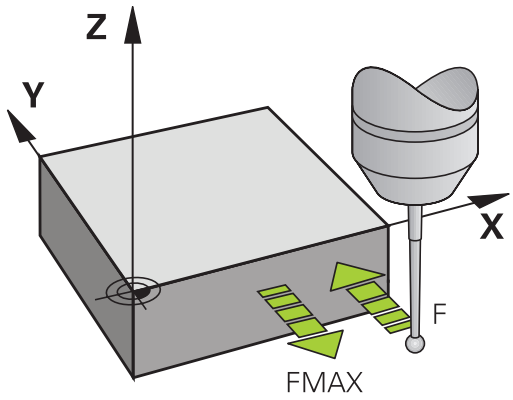

Touch trigger probe, rapid traverse for positioning: FMAX

In **FMAX** you define the feed rate at which the TNC pre-positions the touch probe, or positions it between measuring points.

Touch trigger probe, rapid traverse for positioning: F_PREPOS in touch probe table

In **F_PREPOS** you define whether the TNC is to position the touch probe at the feed rate defined in FMAX or at rapid traverse.

- Input value = **FMAX_PROBE**: Position at feed rate from **FMAX**
- Input value = **FMAX_MACHINE**: Pre-position at rapid traverse

Executing touch probe cycles

All touch probe cycles are DEF active. This means that the TNC runs the cycle automatically as soon as the TNC executes the cycle definition in the program run.

> **!** **Danger of collision!**
> When running touch probe cycles, no cycles must be active for coordinate transformation (Cycle 8 MIRROR IMAGE, Cycles 11 SCALING and 26 AXIS-SPECIFIC SCALING).

Touch probe cycles with a number greater than 400 position the touch probe according to a positioning logic:

- If the current coordinate of the south pole of the stylus is less than the coordinate of the clearance height (defined in the cycle), the TNC retracts the touch probe in the probe axis to the clearance height and then positions it in the working plane to the first starting position.
- If the current coordinate of the stylus south pole is greater than the coordinate of the clearance height, then the TNC first positions the touch probe to the first probe point in the working plane, and then in the touch-probe axis directly to the measuring height.

21.3 Touch probe table

General information

Various data is stored in the touch probe table that defines the probe behavior during the probing process. If you run several touch probes on your machine tool, you can save separate data for each touch probe.

Editing touch probe tables

To edit the touch probe table, proceed as follows:

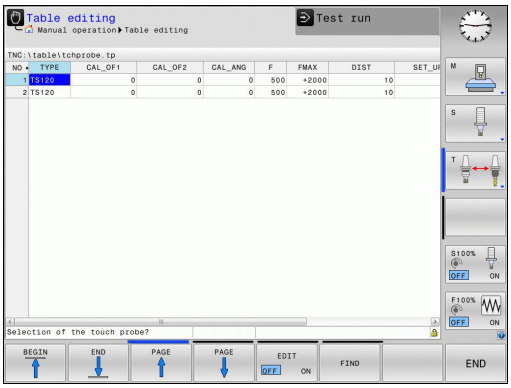

- Select the **Manual Operation** mode

- Select the touch probe functions: Press the **TOUCH PROBE** soft key The TNC displays additional soft keys

- Select the touch probe table: Press the **TCH PROBE TABLE** soft key

- Set the **EDIT** soft key to **ON**
- Using the arrow keys, select the desired setting.
- Perform desired changes.
- Exit the touch probe table: Press the **END** soft key

Touch probe data

Abbr.	Inputs	Dialog
NO	Number of the touch probe: Enter this number in the tool table (column: **TP_NO**) under the appropriate tool number	–
TYPE	Selection of the touch probe used	**Selection of touch probe?**
CAL_OF1	Offset of the touch probe axis to the spindle axis for the reference axis	**TS center misalignmt. ref. axis? [mm]**
CAL_OF2	Offset of the touch probe axis to the spindle axis for the minor axis	**TS center misalignmt. aux. axis? [mm]**
CAL_ANG	The TNC orients the touch probe to the orientation angle before calibration or probing (if orientation is possible)	**Spindle angle for calibration?**
F	Feed rate at which the TNC is to probe the workpiece	**Probing feed rate? [mm/min]**
FMAX	Feed rate at which the touch probe pre-positions, or is positioned between the measuring points	**Rapid traverse in probing cycle? [mm/min]**
DIST	If the stylus is not deflected within the defined path, the TNC outputs an error message	**Maximum measuring path? [mm]**
SET_UP	In **SET_UP** you define how far from the defined (or calculated) touch point the TNC is to pre-position the touch probe. The smaller the value you enter, the more exactly you must define the touch point position. In many touch probe cycles you can also define a set-up clearance that is added to the **SET_UP** machine parameter.	**Set-up clearance? [mm]**
F_PREPOS	Defining speed with pre-positioning: ■ Pre-positioning with speed from **FMAX**: **FMAX_PROBE** ■ Pre-positioning with machine rapid traverse: **FMAX_MACHINE**	**Pre-positioning at rap. traverse? ENT/NO ENT**
TRACK	To increase measuring accuracy, you can use **TRACK = ON** to have an infrared touch probe oriented in the programmed probe direction before every probe process. In this way the stylus is always deflected in the same direction: ■ **ON**: Perform spindle tracking ■ **OFF**: Do not perform spindle tracking	**Orient touch probe cycles? Yes=ENT, No=NOENT**

21.4 Fundamentals

Overview

When running touch probe cycles, Cycle 8 MIRROR IMAGE, Cycle 11 SCALING and Cycle 26 AXIS-SPECIFIC SCALING must not be active.

HEIDENHAIN only gives warranty for the function of the probing cycles if HEIDENHAIN touch probes are used.

The TNC and the machine tool must be set up by the machine tool builder for use of the TT touch probe.

Some cycles and functions may not be provided on your machine tool. Refer to your machine manual.

The touch probe cycles are available only with the Touch Probe Functions software option (option number 17). If you are using a HEIDENHAIN touch probe, this option is available automatically.

In conjunction with the TNC's tool measurement cycles, the tool touch probe enables you to measure tools automatically. The compensation values for tool length and radius can be stored in the central tool file TOOL.T and are accounted for at the end of the touch probe cycle. The following types of tool measurement are provided:

- Tool measurement while the tool is at standstill
- Tool measurement while the tool is rotating
- Measurement of individual teeth

You can program the cycles for tool measurement in the **Programming** mode of operation using the **CYCL DEF** key. The following cycles are available:

Cycle	New format	Page
Calibrating the TT, Cycle 480		504
Measuring the tool length, Cycle 481		507
Measuring the tool radius, Cycle 482		509
Measuring the tool length and radius, Cycle 483		511

The measuring cycles can be used only when the central tool file TOOL.T is active.

Before working with the measuring cycles, you must first enter all the required data into the central tool file and call the tool to be measured with **TOOL CALL**.

Setting machine parameters

> Before you start working with the measuring cycles, check all machine parameters defined in **ProbeSettings** > **CfgTT** and **CfgTTRoundStylus**.
>
> The TNC uses the feed rate for probing defined in **probingFeed** when measuring a tool at standstill.

When measuring a rotating tool, the TNC automatically calculates the spindle speed and feed rate for probing.

The spindle speed is calculated as follows:

n = **maxPeriphSpeedMeas** / (r • 0.0063) where

n:	Spindle speed [rpm]
maxPeriphSpeedMeas:	Maximum permissible cutting speed in m/min
r:	Active tool radius in mm

The feed rate for probing is calculated from:
v = measuring tolerance • n with

v:	Feed rate for probing in mm/min
Measuring tolerance	Measuring tolerance [mm], depending on **maxPeriphSpeedMeas**
n:	Shaft speed [rpm]

probingFeedCalc determines the calculation of the probing feed rate:

probingFeedCalc = **ConstantTolerance**:

The measuring tolerance remains constant regardless of the tool radius. With very large tools, however, the feed rate for probing is reduced to zero. The smaller you set the maximum permissible rotational speed (**maxPeriphSpeedMeas**) and the permissible tolerance (**measureTolerance1**), the sooner you will encounter this effect.

probingFeedCalc = **VariableTolerance**:

The measuring tolerance is adjusted relative to the size of the tool radius. This ensures a sufficient feed rate for probing even with large tool radii. The TNC adjusts the measuring tolerance according to the following table:

Tool radius	Measuring tolerance
Up to 30 mm	**measureTolerance1**
30 to 60 mm	2 • **measureTolerance1**
60 to 90 mm	3 • **measureTolerance1**
90 to 120 mm	4 • **measureTolerance1**

probingFeedCalc = **ConstantFeed**:

The feed rate for probing remains constant; the error of measurement, however, rises linearly with the increase in tool radius:

Measuring tolerance = r • **measureTolerance1**/ 5 mm, where

r:	Active tool radius in mm
measureTolerance1:	Maximum permissible error of measurement

Entries in the tool table TOOL.T

Abbr.	Inputs	Dialog
CUT	Number of teeth (20 teeth maximum)	**Number of teeth?**
LTOL	Permissible deviation from tool length L for wear detection. If the entered value is exceeded, the TNC locks the tool (status **L**). Input range: 0 to 0.9999 mm	**Wear tolerance: length?**
RTOL	Permissible deviation from tool radius R for wear detection. If the entered value is exceeded, the TNC locks the tool (status **L**). Input range: 0 to 0.9999 mm	**Wear tolerance: radius?**
R2TOL	Permissible deviation from tool radius R2 for wear detection. If the entered value is exceeded, the TNC locks the tool (status **L**). Input range: 0 to 0.9999 mm	**Wear tolerance: Radius 2?**
DIRECT.	Cutting direction of the tool for measuring the tool during rotation	**Cutting direction (M3 = -)?**
R_OFFS	Tool length measurement: Tool offset between stylus center and tool center. Default setting: No value entered (offset = tool radius)	**Tool offset: radius?**
L_OFFS	Tool radius measurement: tool offset in addition to **offsetToolAxis** between upper surface of stylus and lower surface of tool. Default: 0	**Tool offset: length?**
LBREAK	Permissible deviation from tool length L for breakage detection. If the entered value is exceeded, the TNC locks the tool (status **L**). Input range: 0 to 0.9999 mm	**Breakage tolerance: length?**
RBREAK	Permissible deviation from tool radius R for breakage detection. If the entered value is exceeded, the TNC locks the tool (status **L**). Input range: 0 to 0.9999 mm	**Breakage tolerance: radius?**

Input examples for common tool types

Tool type	CUT	TT:R_OFFS	TT:L_OFFS
Drill	– (no function)	0 (no offset required because tool tip is to be measured)	
End mill with diameter of < 19 mm	4 (4 teeth)	0 (no offset required because tool diameter is smaller than the contact plate diameter of the TT)	0 (no additional offset required during radius measurement. Offset from **offsetToolAxis** is used)
End mill with diameter of > 19 mm	4 (4 teeth)	R (offset required because tool diameter is larger than the contact plate diameter of the TT)	0 (no additional offset required during radius measurement. Offset from **offsetToolAxis** is used)
Radius cutter with a diameter of 10 mm, for example	4 (4 teeth)	0 (no offset required because the south pole of the ball is to be measured)	5 (always define the tool radius as the offset so that the diameter is not measured in the radius)

21.5 Calibrate the TT (Cycle 480, Option 17)

Cycle run

The TT is calibrated with the measuring cycle TCH PROBE 480 . The calibration process is automatic. The TNC also measures the center misalignment of the calibrating tool automatically by rotating the spindle by 180° after the first half of the calibration cycle.

The calibrating tool must be a precisely cylindrical part, for example a cylinder pin. The resulting calibration values are stored in the TNC memory and are accounted for during subsequent tool measurements.

Please note while programming:

The functioning of the calibration cycle is dependent on machine parameter **CfgToolMeasurement**. Refer to your machine tool manual.

Before calibrating the touch probe, you must enter the exact length and radius of the calibrating tool into the tool table TOOL.T.

The position of the TT within the machine working space must be defined by setting the Machine Parameters **centerPos** > **[0]** to **[2]**.

If you change the setting of any of the Machine Parameters **centerPos** > **[0]** to **[2]**, you must recalibrate.

Cycle parameters

- **Clearance height**: Enter the position in the spindle axis at which there is no danger of collision with the workpiece or fixtures. The clearance height is referenced to the active workpiece datum. If you enter such a small clearance height that the tool tip would lie below the level of the probe contact, the TNC automatically positions the tool above the level of the probe contact (safety zone from **safetyDistStylus**). Input range -99999.9999 to 99999.9999

NC blocks in new format

```
6 TOOL CALL 1 Z
7 TCH PROBE 480 CALIBRATE TT
    Q260=+100;CLEARANCE HEIGHT
```

21.6 Calibrating the wireless TT 449 (Cycle 484, DIN/ISO: G484, Option 17)

Fundamentals

With Cycle 484, you can calibrate your tool touch probe, e.g the wireless infrared TT 449 tool touch probe. The calibration process is either fully automatic or semi-automatic, depending on the parameter setting.

- **Semi-automatic**—stop before running: A dialog asks you to manually move the tool over the TT
- **Fully automatic**—no stop before running: Before using Cycle 484 you must move the tool over the TT

Cycle run

To calibrate the tool touch probe, program the measuring cycle TCH PROBE 484. In the input parameter Q536, you can specify whether you want to run the cycle semi-automatically or fully automatically.

Semi-automatic—stop before running

- Insert the calibrating tool
- Define and start the calibration cycle
- The TNC interrupts the calibration cycle
- The TNC opens a dialog in a new window
- The dialog asks you to manually position the calibrating tool above the center of the touch probe. Ensure that the calibrating tool is located above the measuring surface of the probe contact

Fully automatic—no stop before running

- Insert the calibrating tool
- Position the calibrating tool above the center of the touch probe. Ensure that the calibrating tool is located above the measuring surface of the probe contact
- Define and start the calibration cycle
- The calibration cycle is executed without stopping. The calibration process starts from the current position of the tool.

Calibrating tool:

The calibrating tool must be a precisely cylindrical part, for example a cylinder pin. Enter the exact length and radius of the calibrating tool into the tool table TOOL.T. At the end of the calibration process, the TNC stores the calibration values and takes them into account during subsequent tool measurement. The calibrating tool should have a diameter of more than 15 mm and protrude approx. 50 mm from the chuck.

21.6 Calibrating the wireless TT 449 (Cycle 484, DIN/ISO: G484, Option 17)

Please note while programming:

Danger of collision!

To avoid collisions, the tool must be pre-positioned before the cycle call if Q536 is set to 1!

In the calibration process, the TNC also measures the center misalignment of the calibrating tool by rotating the spindle by 180° after the first half of the calibration cycle.

The functioning of the calibration cycle is dependent on machine parameter **CfgToolMeasurement**. Refer to your machine manual.

The calibrating tool should have a diameter of more than 15 mm and protrude approx. 50 mm from the chuck. When using a cylinder pin of these dimensions, the resulting deformation will only be 0.1 µm per 1 N of probing force. The use of a calibrating tool of too small a diameter and/or protruding too far from the chuck may cause significant inaccuracies.

Before calibrating the touch probe, you must enter the exact length and radius of the calibrating tool into the tool table TOOL.T.

The TT needs to be recalibrated if you change its position on the table.

Cycle parameters

Stop before running Q536: Specify whether to stop before cycle start or run the cycle automatically without stopping:
0: Stop before running. A dialog asks you to manually position the tool above the tool touch probe. After moving the tool to the approximate position above the tool touch probe, press NC start to continue the calibration process or press the **CANCEL** soft key to cancel the calibration process
1: No stop before running. The TNC starts the calibration process from the current position. Before running Cycle 484, you must position the tool above the tool touch probe.

21.7 Measuring tool length (Cycle 481, Option 17)

Cycle run

To measure the tool length, program the measuring cycle TCH PROBE 481. Via input parameters you can measure the length of a tool by three methods:

- If the tool diameter is larger than the diameter of the measuring surface of the TT, you measure the tool while it is rotating.
- If the tool diameter is smaller than the diameter of the measuring surface of the TT, or if you are measuring the length of a drill or spherical cutter, you measure the tool while it is at standstill.
- If the tool diameter is larger than the diameter of the measuring surface of the TT, you measure the individual teeth of the tool while it is at standstill.

Cycle for measuring a tool during rotation

The control determines the longest tooth of a rotating tool by positioning the tool to be measured at an offset to the center of the touch probe and then moving it toward the measuring surface of the TT until it contacts the surface. The offset is programmed in the tool table under Tool offset: Radius (**TT: R_OFFS**).

Cycle for measuring a tool during standstill (e.g. for drills)

The control positions the tool to be measured over the center of the measuring surface. It then moves the non-rotating tool toward the measuring surface of the TT until it touches the surface. To activate this function, enter zero for the tool offset: Radius (**TT: R_OFFS**) in the tool table.

Cycle for measuring individual teeth

The TNC pre-positions the tool to be measured to a position at the side of the touch probe head. The distance from the tip of the tool to the upper edge of the touch probe head is defined in **offsetToolAxis**. You can enter an additional offset with tool offset: Length (**TT: L_OFFS**) in the tool table. The TNC probes the tool radially during rotation to determine the starting angle for measuring the individual teeth. It then measures the length of each tooth by changing the corresponding angle of spindle orientation.

Please note while programming:

Before measuring a tool for the first time, enter the following data on the tool into the tool table TOOL.T: the approximate radius, the approximate length, the number of teeth, and the cutting direction.

You can run an individual tooth measurement of tools with **up to 20 teeth**.

Cycle parameters

- **Measure tool=0 / Check tool=1**: Select whether the tool is to be measured for the first time or whether a tool that has already been measured is to be inspected. If the tool is being measured for the first time, the TNC overwrites the tool length L in the central tool file TOOL.T by the delta value DL = 0. If you wish to inspect a tool, the TNC compares the measured length with the tool length L that is stored in TOOL.T. It then calculates the positive or negative deviation from the stored value and enters it into TOOL.T as the delta value DL. The deviation can also be used for Q-parameter Q115. If the delta value is greater than the permissible tool length tolerance for wear or break detection, the TNC will lock the tool (status L in TOOL.T).
- **Clearance height**: Enter the position in the spindle axis at which there is no danger of collision with the workpiece or fixtures. The clearance height is referenced to the active workpiece datum. If you enter such a small clearance height that the tool tip would lie below the level of the probe contact, the TNC automatically positions the tool above the level of the probe contact (safety zone from **safetyDistStylus**). Input range -99999.9999 to 99999.9999
- **Cutter measurement? 0=No / 1=Yes**: Choose whether the control is to measure the individual teeth (maximum of 20 teeth)

NC blocks

```
6 TOOL CALL 12 Z
7 TCH PROBE 481 TOOL LENGTH
    Q340=1      ;CHECK
    Q260=+100;CLEARANCE HEIGHT
    Q341=1      ;PROBING THE TEETH
```

21.8 Measuring tool radius (Cycle 482, Option 17)

Cycle run

To measure the tool radius, program the measuring cycle TCH PROBE 482. Select via input parameters by which of two methods the radius of a tool is to be measured:

- Measuring the tool while it is rotating
- Measuring the tool while it is rotating and subsequently measuring the individual teeth.

The TNC pre-positions the tool to be measured to a position at the side of the touch probe head. The distance from the tip of the milling tool to the upper edge of the touch probe head is defined in **offsetToolAxis**. The TNC probes the tool radially while it is rotating. If you have programmed a subsequent measurement of individual teeth, the control measures the radius of each tooth with the aid of oriented spindle stops.

Please note while programming:

Before measuring a tool for the first time, enter the following data on the tool into the tool table TOOL.T: the approximate radius, the approximate length, the number of teeth, and the cutting direction.

Cylindrical tools with diamond surfaces can be measured with stationary spindle. To do so, define in the tool table the number of teeth **CUT** as 0 and adjust machine parameter **CfgToolMeasurement**. Refer to your machine manual.

Cycle parameters

- **Measure tool=0 / Check tool=1**: Select whether the tool is to be measured for the first time or whether a tool that has already been measured is to be inspected. If the tool is being measured for the first time, the TNC overwrites the tool radius R in the central tool file TOOL.T by the delta value DR = 0. If you wish to inspect a tool, the TNC compares the measured radius with the tool radius R that is stored in TOOL.T. It then calculates the positive or negative deviation from the stored value and enters it into TOOL.T as the delta value DR. The deviation can also be used for Q-parameter Q116. If the delta value is greater than the permissible tool radius tolerance for wear or break detection, the TNC will lock the tool (status L in TOOL.T).
- **Clearance height**: Enter the position in the spindle axis at which there is no danger of collision with the workpiece or fixtures. The clearance height is referenced to the active workpiece datum. If you enter such a small clearance height that the tool tip would lie below the level of the probe contact, the TNC automatically positions the tool above the level of the probe contact (safety zone from **safetyDistStylus**). Input range -99999.9999 to 99999.9999
- **Cutter measurement? 0=No / 1=Yes**: Choose whether the control is also to measure the individual teeth (maximum of 20 teeth)

NC blocks

```
6 TOOL CALL 12 Z
7 TCH PROBE 482 TOOL RADIUS
    Q340=1      ;CHECK
    Q260=+100;CLEARANCE HEIGHT
    Q341=1      ;PROBING THE TEETH
```

21.9 Measuring tool length and radius (Cycle 483, Option 17)

Cycle run

To measure both the length and radius of a tool, program the measuring cycle TCH PROBE 483. This cycle is particularly suitable for the first measurement of tools, as it saves time when compared with individual measurement of length and radius. Via input parameters you can select the desired type of measurement:

- Measuring the tool while it is rotating
- Measuring the tool while it is rotating and subsequently measuring the individual teeth.

The TNC measures the tool in a fixed programmed sequence. First it measures the tool radius, then the tool length. The sequence of measurement is the same as for Cycles as well as 481 and 482.

Please note while programming:

Before measuring a tool for the first time, enter the following data on the tool into the tool table TOOL.T: the approximate radius, the approximate length, the number of teeth, and the cutting direction.

Cylindrical tools with diamond surfaces can be measured with stationary spindle. To do so, define in the tool table the number of teeth **CUT** as 0 and adjust machine parameter **CfgToolMeasurement**. Refer to your machine manual.

Cycle parameters

- **Measure tool=0 / Check tool=1**: Select whether the tool is to be measured for the first time or whether a tool that has already been measured is to be inspected. If the tool is being measured for the first time, the TNC overwrites the tool radius R and the tool length L in the central tool file TOOL.T by the delta values DR = 0 and DL = 0. If you wish to inspect a tool, the TNC compares the measured data with the tool data stored in TOOL.T. The TNC calculates the deviations and enters them as positive or negative delta values DR and DL in TOOL.T. The deviations are also available in the Q parameters Q115 and Q116. If the delta values are greater than the permissible tool tolerances for wear or break detection, the TNC will lock the tool (status L in TOOL.T).
- **Clearance height**: Enter the position in the spindle axis at which there is no danger of collision with the workpiece or fixtures. The clearance height is referenced to the active workpiece datum. If you enter such a small clearance height that the tool tip would lie below the level of the probe contact, the TNC automatically positions the tool above the level of the probe contact (safety zone from **safetyDistStylus**). Input range -99999.9999 to 99999.9999
- **Cutter measurement? 0=No / 1=Yes**: Choose whether the control is also to measure the individual teeth (maximum of 20 teeth)

NC blocks

```
6 TOOL CALL 12 Z
7 TCH PROBE 483 MEASURE TOOL
    Q340=1      ;CHECK
    Q260=+100;CLEARANCE HEIGHT
    Q341=1      ;PROBING THE TEETH
```

22

Tables and overviews

22.1 Machine-specific user parameters

Application

The parameter values are entered in the **configuration editor**.

To enable you to set machine-specific functions for users, your machine tool builder can define which machine parameters are available as user parameters. Furthermore, your machine tool builder can integrate additional machine parameters, which are not described in the following, into the TNC.

Refer to your machine manual.

The machine parameters are grouped as parameter objects in a tree structure in the configuration editor. Each parameter object has a name (e.g. **Settings for screen displays**) that gives information about the parameters it contains. A parameter object (entity) is marked with an "E" in the folder symbol in the tree structure. Some machine parameters have a key name to identify them unambiguously. The key name assigns the parameter to a group (e.g. X for X axis). The respective group folder bears the key name and is marked by a "K" in the folder symbol.

If you are in the configuration editor for the user parameters, you can change the display of the existing parameters. In the default setting, the parameters are displayed with short, explanatory texts. To display the actual system names of the parameters, press the key for the screen layout key and then the **SHOW SYSTEM NAME** soft key. Follow the same procedure to return to the standard display.

Calling the configuration editor and changing parameters

- Select the **Programming** mode of operation
- Press the **MOD** key
- Enter the code number **123**
- Changing parameters
- Press the **END** soft key to exit the configuration editor
- Press the **SAVE** soft key to save changes

The icon at the beginning of each line in the parameter tree shows additional information about this line. The icons have the following meanings:

- Branch exists but is closed
- Branch is open
- Empty object, cannot be opened
- Initialized machine parameter
- Uninitialized (optional) machine parameter
- Can be read but not edited
- Can neither be read nor edited

The type of the configuration object is identified by its folder symbol:

- Key (group name)
- List
- Entity (parameter object)

Displaying help texts

The **HELP** key enables you to call a help text for each parameter object or attribute.

If the help text does not fit on one page (1/2 is then displayed at the upper right, for example), press the **HELP PAGE** soft key to scroll to the second page.

To exit the help text, press the **HELP** key again.

Additional information, such as the unit of measure, the initial value, or a selection list, is also displayed. If the selected machine parameter matches a parameter in the previous control model, the corresponding MP number is shown.

Parameter list

Parameter settings

DisplaySettings

Settings for screen display

Sequence of displayed axes

[0] to [5]

Depends on available axes

Type of position display in position window

NOMINAL
ACTUAL
REFACTL
REFNOML
LAG
ACTUAL DIST
DIST
M 118

Type of position display in status display

NOMINAL
ACTUAL
REF ACTL
REF NOML
LAG
ACTUAL DIST
DIST
M 118

Definition of decimal separation characters for position display

.

Display of feed rate in Manual Operation mode

at axis key: Only show feed rate when axis-direction key is pressed

always minimum: Always show feed rate

Display of spindle position in the position display

during closed loop: Only show spindle position when spindle is in position control

during closed loop and M5: Show spindle position when spindle is in position control and with M5

Show or hide Preset table soft key

True: Do not display Preset table soft key

False: Display Preset table soft key

Parameter settings

DisplaySettings
- Display step for individual axes
  - List of all available axes
    - Display step for position display in mm or degrees
      - **0.1**
      - **0.05**
      - **0.01**
      - **0.005**
      - **0.001**
      - **0.0005**
      - **0.0001**
    - Display step for position display in inches
      - **0.005**
      - **0.001**
      - **0.0005**
      - **0.0001**

DisplaySettings
- Definition of unit of measure valid for the display
  - **metric: Use metric system**
  - **inch: Use inch system**

DisplaySettings
- Format of NC programs and display of cycles
  - Program input in HEIDENHAIN conversational text or in DIN/ISO
    - **HEIDENHAIN: Program input in BA MDI in conversational text dialog**
    - **ISO: Program input in Positioning with MDI mode of operation in DIN/ISO**

Parameter settings

DisplaySettings

Setting the NC and PLC dialog language

NC dialog language

ENGLISH
GERMAN
CZECH
FRENCH
ITALIAN
SPANISH
PORTUGUESE
SWEDISH
DANISH
FINNISH
DUTCH
POLISH
HUNGARIAN
RUSSIAN
CHINESE
CHINESE_TRAD
SLOVENIAN
KOREAN
NORWEGIAN
ROMANIAN
SLOVAK
TURKISH

PLC dialog language

See NC dialog language

PLC error message language

See NC dialog language

Help language

See NC dialog language

Parameter settings

DisplaySettings
Behavior with control start-up
Acknowledge "Power interrupted" message
TRUE: Control start-up is not continued until the message has been acknowledged
FALSE: "Power interrupted" message not displayed

DisplaySettings
Display mode for time display
Selection for display mode in the time display
Analog
Digital
Logo
Analog and Logo
Digital and Logo
Analog on Logo
Digital on Logo

DisplaySettings
Link row On/Off
Display setting for link row
OFF: Deactivate the information line in the operating mode line
ON: Activate the information line in the operating mode line

DisplaySettings
Settings for 3-D graphic simulation
Model type of 3-D graphic simulation
3-D (processor-intensive): Model display for complex machining with undercuts
2.5-D: Model display for 3-axis machining
No Model: Model display deactivated

Model quality of 3-D graphic simulation
very high: High resolution; Display of block end points possible
high: High resolution
medium: Medium resolution
low: Low resolution

DisplaySettings
Settings for position display
Position display with TOOL CALL DL
As Tool Length: The programmed oversize DL is considered as a tool length modification for display of the workpiece-oriented position
As Workpiece Oversize: The programmed oversize DL is considered as a workpiece oversize for display of the workpiece-oriented position

---

Parameter settings

ProbeSettings
Configuration of tool measurement
TT140_1
M function for spindle orientation
-1: Spindle orientation directly via NC
0: Function inactive
1 to 999: Number of M function for spindle orientation

Probing routine
MultiDirections: Probe from several directions
SingleDirection: Probe from one direction

Probing direction for tool radius measurement
X_Positive, Y_Positive,X_Negative, Y_Negative, Z_Positive, Z_Negative (depending on tool axis)

Distance of tool lower edge to probe contact upper edge
0.001 to 99.9999 [mm]: Offset of stylus to tool

Rapid traverse in probing cycle
10 to 300 000 [mm/min]: Rapid traverse in probing cycle

Probing feed rate with tool measurement
1 to 3 000 [mm/min]: Probing feed rate with tool measurement

Calculation of probing feed rate
ConstantTolerance: Calculation of probing feed rate with constant tolerance
VariableTolerance: Calculation of probing feed rate with variable tolerance
ConstantFeed: Constant probing feed rate

Type of speed determination
Automatic: Determine speed automatically
MinSpindleSpeed: Use minimum spindle speed

Max. permissible rotational speed on cutting edge
1 to 129 [m/min]: Permissible rotational speed on cutter circumference

Maximum permissible speed with tool measurement
0 bis 1 000 [1/min]: Maximum permissible speed

Maximum permissible measurement error with tool measurement
0.001 to 0.999 [mm]: First maximum permissible measurement error

Maximum permissible measurement error with tool measurement
0.001 bis 0.999 [mm]: Second maximum permissible measurement error

NC stop during tool check
True: When breakage tolerance is exceeded the NC program is stopped
False: The NC program is not stopped

Parameter settings

NC stop during tool measurement

True: When breakage tolerance is exceeded the NC program is stopped

False: The NC program is not stopped

Modification of tool table during tool check and measurement

AdaptOnMeasure: Table modified after tool measurement

AdaptOnBoth: Table modified after tool check and measurement

AdaptNever: Table not modified after tool check and measurement

Configuring a round stylus

TT140_1

Coordinates of stylus center

[0]: X coordinates of stylus center referenced to machine datum

[1]: Y coordinates of stylus center referenced to machine datum

[2]: Z coordinates of stylus center referenced to machine datum

Safety clearance above stylus for pre-position

0.001 to 99 999.9999 [mm]: Safety clearance in tool axis direction

Safety zone around stylus for pre-position

0.001 to 99 999.9999 [mm]: Safety clearance in the plane vertically to the tool axis

Parameter settings

ChannelSettings
- CH_NC
  - Active kinematics
    - Kinematics to be activated
      - **List of machine kinematics**
    - Kinematics to be activated with control start-up
      - **List of machine kinematics**
  - Determining the behavior of the NC program
    - Resetting the machining time with program start
      - **True: Machining time is reset**
      - **False: Machining time is not reset**
    - PLC signal for number of pending machining cycle
      - **Dependent on machine builder**
  - Configuration of machining cycles
    - Overlap factor for pocket milling
      - **0.001 to 1.414: Overlap factor for Cycle 4 POCKET MILLING and Cycle 5 CIRCULAR POCKET**
    - Behavior after machining a contour pocket
      - **PosBeforeMachining: Position as before machining a cycle**
      - **ToolAxClearanceHeight: Position tool axis to clearance height**
    - Display "Spindle ?" error message if M3/M4 is not active
      - **on: Output error message**
      - **off: Do not output error message**
    - Display "Enter negative depth" error message
      - **on: Output error message**
      - **off: Do not output error message**
    - Approach behavior on a slot wall in a cylindrical surface
      - **LineNormal: Approach with straight line**
      - **CircleTangential: Approach with an arc movement**
    - M function for spindle orientation in machining cycles
      - **-1: Spindle orientation directly via NC**
      - **0: Function inactive**
      - **1 to 999: Number of M function for spindle orientation**
    - Do not display "Plunging type not possible" error message
      - **on: Error message is not displayed**
      - **off: Error message is displayed**

Parameter settings

Settings for the NC editor

Creating backup files

TRUE: Create backup file after editing NC programs

FALSE: Create no backup file after editing NC programs

Cursor behavior after deleting lines

TRUE: Cursor is on previous line after deletion (iTNC behavior)

FALSE: Cursor is on subsequent line after deletion

Cursor behavior with the first and last line

TRUE: All-round cursors permitted at PGM beginning/end

FALSE: All-round cursors not permitted at PGM beginning/end

Line break with multi-line blocks

ALL: Always show lines completely

ACT: Only show lines of the active block completely

NO: Only show lines completely if the block is edited

Activate help graphics with cycle input

TRUE: Fundamentally always show help graphics during input

FALSE: Only show help graphics if the CYCLE HELP soft key is set to ON. The CYCLE HELP OFF/ON soft key is displayed in the Programming mode of operation after pressing the "Screen layout" button

Behavior of soft key row following a cycle input

TRUE: Leave cycle soft key row active after a cycle definition

FALSE: Hide cycle soft key row after a cycle definition

Confirmation request before block is deleted

TRUE: Display confirmation request before deleting an NC block

FALSE: Do not display confirmation request before deleting an NC block

Line number up to which NC program is tested

100 to 50000: Program length for which geometry should be tested

DIN/ISO programming: Block number increment

0 to 250: Increment for generating DIN/ISO blocks in the program

Define programmable axes

TRUE: Use defined axis configuration

FALSE: Use default axis configuration XYZABCUVW

Behavior with paraxial positioning blocks

TRUE: Paraxial positioning blocks permitted

FALSE: Paraxial positioning blocks locked

Line number up to which identical syntax elements are searched for

500 to 50000: Search for selected elements with up/down arrow keys

Parameter settings
Settings for the file manager Display of dependent files **MANUAL: Dependent files are displayed** **AUTOMATIC: Dependent files are not displayed**
Path specifications for end users List with drives and/or directories **Drives and directories entered here are shown by the TNC in the file manager** FN 16 output path for execution **Path for FN 16 output if no path has been defined in the program** FN 16 output path for Programming and Test Run operating modes **Path for FN 16 output if no path has been defined in the program**
Serial Interface RS232: see "Setting up data interfaces", page 373

22.2 Connector pin layout and connection cables for data interfaces

RS-232-C/V.24 interface for HEIDENHAIN devices

The interface complies with the requirements of EN 50 178 for **low voltage electrical separation**.

When using the 25-pin adapter block:

TNC		**Conn. cable 365725-xx**			**Adapter block 310085-01**		**Conn. cable 274545-xx**		
Male	Assignment	Female	Color	Female	Male	Female	Male	Color	Female
1	Do not assign	1		1	1	1	1	White/ Brown	1
2	RXD	2	Yellow	3	3	3	3	Yellow	2
3	TXD	3	Green	2	2	2	2	Green	3
4	DTR	4	Brown	20	20	20	20	Brown	8
5	Signal GND	5	Red	7	7	7	7	Red	7
6	DSR	6	Blue	6	6	6	6		6
7	RTS	7	Gray	4	4	4	4	Gray	5
8	CTR	8	Pink	5	5	5	5	Pink	4
9	Do not assign	9					8	Violet	20
Hsg.	External shield	Hsg.	External shield	Hsg.	Hsg.	Hsg.	Hsg.	External shield	Hsg.

When using the 9-pin adapter block:

TNC		**Conn. cable 355484-xx**			**Adapter block 363987-02**		**Conn. cable 366964-xx**		
Male	Assignment	Female	Color	Male	Female	Male	Female	Color	Female
1	Do not assign	1	Red	1	1	1	1	Red	1
2	RXD	2	Yellow	2	2	2	2	Yellow	3
3	TXD	3	White	3	3	3	3	White	2
4	DTR	4	Brown	4	4	4	4	Brown	6
5	Signal GND	5	Black	5	5	5	5	Black	5
6	DSR	6	Violet	6	6	6	6	Violet	4
7	RTS	7	Gray	7	7	7	7	Gray	8
8	CTR	8	White/ Green	8	8	8	8	White/ Green	7
9	Do not assign	9	Green	9	9	9	9	Green	9
Hsg.	External shield	Hsg.	External shield	Hsg.	Hsg.	Hsg.	Hsg.	External shield	Hsg.

Non-HEIDENHAIN devices

The connector layout of a non-HEIDENHAIN device may substantially differ from that of a HEIDENHAIN device.

It depends on the unit and the type of data transfer. The table below shows the connector pin layout on the adapter block.

Adapter block 363987-02		**Conn. cable 366964-xx**		
Female	Male	Female	Color	Female
1	1	1	Red	1
2	2	2	Yellow	3
3	3	3	White	2
4	4	4	Brown	6
5	5	5	Black	5
6	6	6	Violet	4
7	7	7	Gray	8
8	8	8	White/ Green	7
9	9	9	Green	9
Hsg.	Hsg.	Hsg.	Ext. shield	Hsg.

Ethernet interface RJ45 socket

Maximum cable length:

- Unshielded: 100 m
- Shielded: 400 m

Pin	Signal	Description
1	TX+	Transmit Data
2	TX–	Transmit Data
3	REC+	Receive Data
4	Vacant	
5	Vacant	
6	REC–	Receive Data
7	Vacant	
8	Vacant	

22.3 Technical Information

Technical information

Explanation of symbols

- ■ Default
- □ Axis option
- **1** Advanced Function Set 1

User functions	
Short description	■ Basic version: 3 axes plus closed-loop spindle □ 1. Additional axis for 4 axes plus closed-loop spindle □ 2. Additional axis for 5 axes plus closed-loop spindle
Program entry	In HEIDENHAIN conversational
Position entry	■ Nominal positions for lines in Cartesian coordinates ■ Incremental or absolute dimensions ■ Display and entry in mm or inches
Tool tables	Multiple tool tables with any number of tools
Parallel operation	Creating a program with graphical support while another program is being run
Cutting data	Automatic calculation of spindle speed, cutting speed, feed per tooth and feed per revolution
Program jumps	■ Subprograms ■ Program section repeats ■ Any desired program as subprogram
Fixed cycles	■ Cycles for drilling, and conventional and rigid tapping ■ Roughing and finishing rectangular pockets ■ Cycles for pecking, reaming, boring, and counterboring ■ Roughing and finishing rectangular studs ■ Cycles for clearing level surfaces ■ Face milling ■ Cartesian and polar point patterns ■ OEM cycles (special cycles developed by the machine tool builder) can also be integrated
Coordinate transformation	■ Datum shift, mirroring ■ Scaling factor (axis-specific)
Q parameters Programming with variables	■ Mathematical functions =, +, –, *, /, roots ■ Logical operations (=, ≠, <, >) ■ Calculating with parentheses ■ sin α, cos α, tan α , arc sin, arc cos, arc tan, a^n, e^n, ln, log, absolute value of a number, constant π, negation, truncation of digits before or after the decimal point ■ Functions for calculation of circles ■ String param.

User functions		
Programming aids	■	Calculator
	■	Complete list of all current error messages
	■	Context-sensitive help function for error messages
	■	TNCguide: The integrated help system.
	■	Graphic support for the programming of cycles
	■	Comment and structure blocks in the NC program
Teach-In	■	Actual positions can be transferred directly into the NC program
Program verification graphics Display modes	■	Graphic simulation before program run, even while another program is being run
	■	Plan view / projection in 3 planes / 3-D view
	■	Magnification of details
Programming graphics	■	In the **Programming** mode, the contour of the NC blocks is drawn on screen while they are being entered (2-D pencil-trace graphics), even while another program is running
Program-run graphics Display modes	■	Graphic simulation of real-time machining in plan view / projection in 3 planes / 3-D view
Machining time	■	Calculation of machining time in the **Test Run** operating mode
	■	Display of the current machining time in the **Program Run, Single Block** and **Program Run, Full Sequence** operating modes
Datum management	■	For saving any reference points
Contour, returning to	■	Mid-program startup in any block in the program, returning the tool to the calculated nominal position to continue machining
	■	Program interruption, contour departure and return
Datum tables	■	Multiple datum tables, for storing workpiece-related datums
Touch probe cycles	■	Calibrating the touch probe
	■	Datum setting, manual
	■	Tools can be measured automatically

22.3 Technical Information

Specifications		
Components	■	Operating panel
	■	TFT color flat-panel display with soft keys
Program memory	■	2 GB
Input resolution and display step	■	As fine as 0.1 µm for linear axes
	■	Up to 0.0001° for rotary axes
Input range	■	Maximum 999 999 999 mm or 999 999 999°
Block processing time	■	6 ms
Axis feedback control	■	Position loop resolution: Signal period of the position encoder/1024
	■	Cycle time of position controller: 3 ms
	■	Cycle time of speed controller: 200 µs
Range of traverse	■	Maximum 100 m (3937 inches)
Spindle speed	■	Maximum 100 000 rpm (analog speed command signal)
Error compensation	■	Linear and nonlinear axis error, backlash, thermal expansion
	■	Static friction
Data interfaces	■	One each RS-232-C /V.24 max. 115 kilobaud
	■	Expanded interface with LSV-2 protocol for external operation of the TNC over the interface with HEIDENHAIN software TNCremo
	■	Ethernet interface 1000 BaseT
	■	3 x USB (1 x front USB 2.0; 2 x rear USB 3.0)
Ambient temperature	■	Operation: 5°C to +45°C
	■	Storage: -35°C to +65°C

Accessories		
Electronic Handwheels	■	One HR 410 portable handwheel, or
	■	One HR 130 panel-mounted handwheel, or
	■	Up to three HR 150 panel-mounted handwheels via HRA 110 handwheel adapter
Touch probes	■	TS 260: Triggering 3-D touch probe with cable connection
	■	TT 160: 3-D touch trigger probe for tool measurement
	■	KT 130: Simple touch trigger probe with cable connection

Touch Probe Functions (option 17)	
Touch probe functions	**Touch probe cycles:** ■ Datum setting in the **Manual Operation** mode ■ Tools can be measured automatically

Python OEM Process (option 46)		
	■	Python applications on the TNC

Input format and unit of TNC functions	
Positions, coordinates, chamfer lengths	-99 999.9999 to +99 999.9999 (5, 4: places before the decimal point, places after the decimal point) [mm]
Tool numbers	0 to 32 767.9 (5, 1)
Tool names	32 characters, enclosed by quotation marks with **TOOL CALL**. Permitted special characters: #, $, %, &, -
Delta values for tool compensation	–99.9999 to +99.9999 (2, 4) [mm]
Spindle speeds	0 to 99 999.999 (5, 3) [rpm]
Feed rates	0 to 99 999.999 (5.3) [mm/min] or [mm/tooth] or [mm/rev]
Dwell time in Cycle 9	0 to 3600.000 (4, 3) [s]
Thread pitch in various cycles	–9.9999 to +9.9999 (2, 4) [mm]
Angle of spindle orientation	0 to 360.0000 (3, 4) [°]
Datum numbers in Cycle 7	0 to 2999 (4, 0)
Scaling factor in Cycles 11 and 26	0.000001 to 99.999999 (2, 6)
Miscellaneous functions M	0 to 999 (4, 0)
Q parameter numbers	0 to 1999 (4, 0)
Q parameter values	–99 999.9999 to +99 999.9999 (9, 6)
Labels (LBL) for program jumps	0 to 999 (5, 0)
Labels (LBL) for program jumps	Any text string in quotes (“ ”)
Number of program section repeats REP	1 to 65 534 (5, 0)
Error number with Q parameter function FN14	0 to 1199 (4, 0)

Fixed cycles

Cycle number	Cycle designation	DEF active	CALL active
7	Datum shift	■	
8	Mirror image	■	
9	Dwell time	■	
11	Scaling factor	■	
12	Program call	■	
13	Spindle orientation	■	
200	Drilling		■
201	Reaming		■
202	Boring		■
203	Universal drilling		■
204	Back boring		■
205	Universal pecking		■
206	Tapping with a floating tap holder, new		■
207	Rigid tapping, new		■

Cycle number	Cycle designation	DEF active	CALL active
220	Polar pattern	■	
221	Cartesian pattern	■	
233	Face milling (selectable machining direction, consider the sides)		■
240	Centering		■
241	Single-lip deep-hole drilling		■
247	Datum setting	■	
251	Rectangular pocket (complete machining)		■
253	Slot milling		■
256	Rectangular stud (complete machining)		■

Miscellaneous functions

M	Effect	Effective at block... Start	End	Page
M0	Program STOP/Spindle STOP/Coolant OFF		■	267
M1	Optional program run STOP/Spindle STOP/Coolant OFF		■	359
M2	Stop program/Spindle STOP/Coolant OFF/ CLEAR status display (depending on machine parameter)/Return jump to block 1		■	267
M3	Spindle ON clockwise	■		267
M4	Spindle ON counterclockwise	■		
M5	Spindle STOP		■	
M6	Tool change/STOP program run (depending on machine parameter)/ Spindle STOP		■	267
M8	Coolant on	■		267
M9	Coolant off		■	
M13	Spindle ON clockwise /coolant ON	■		267
M14	Spindle ON counterclockwise/coolant on	■		
M30	Same function as M2		■	267
M89	Vacant miscellaneous function **or**	■		396
	cycle call, modally effective (depending on machine parameter)		■	
M91	Within the positioning block: Coordinates are referenced to machine datum	■		268
M92	Within the positioning block: Coordinates are referenced to position defined by machine tool builder, such as tool change position	■		268
M94	Reduce the rotary axis display to a value below 360°	■		270
M99	Blockwise cycle call		■	396
M140	Retraction from the contour in the tool-axis direction	■		273
M141	Suppress touch probe monitoring	■		"Suppressing touch probe monitoring: M141"

Index

HEIDENHAIN

DR. JOHANNES HEIDENHAIN GmbH
Dr.-Johannes-Heidenhain-Straße 5
83301 Traunreut, Germany
☏ +49 8669 31-0
FAX +49 8669 5061
E-mail: info@heidenhain.de

Technical support FAX +49 8669 32-1000
Measuring systems ☏ +49 8669 31-3104
E-mail: service.ms-support@heidenhain.de
TNC support ☏ +49 8669 31-3101
E-mail: service.nc-support@heidenhain.de
NC programming ☏ +49 8669 31-3103
E-mail: service.nc-pgm@heidenhain.de
PLC programming ☏ +49 8669 31-3102
E-mail: service.plc@heidenhain.de
Lathe controls ☏ +49 8669 31-3105
E-mail: service.lathe-support@heidenhain.de

www.heidenhain.de

Touch probes from HEIDENHAIN

help you reduce non-productive time and
improve the dimensional accuracy of the finished workpieces.

Workpiece touch probes

TS 220	Signal transmission by cable
TS 440, TS 444	Infrared transmission
TS 640, TS 740	Infrared transmission

- Workpiece alignment
- Setting datums
- Workpiece measurement

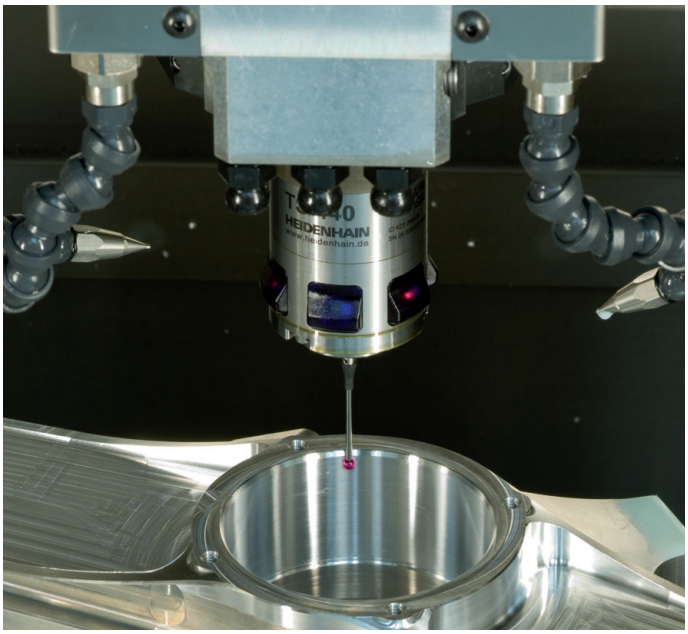

Tool touch probes

TT 140	Signal transmission by cable
TT 449	Infrared transmission
TL	Contact-free laser systems

- Tool measurement
- Wear monitoring
- Tool breakage detection

819494-22 · Ver02 · SW03 · 2/2015 · H · Printed in Germany